A. P. BRUSH.

MIXTURE SUPPLYING APPARATUS FOR INTERNAL COMBUSTION ENGINES.

APPLICATION FILED MAY 8, 1911.

1,112,257.

Patented Sept. 29, 1914.

2 SHEETS—SHEET 1.

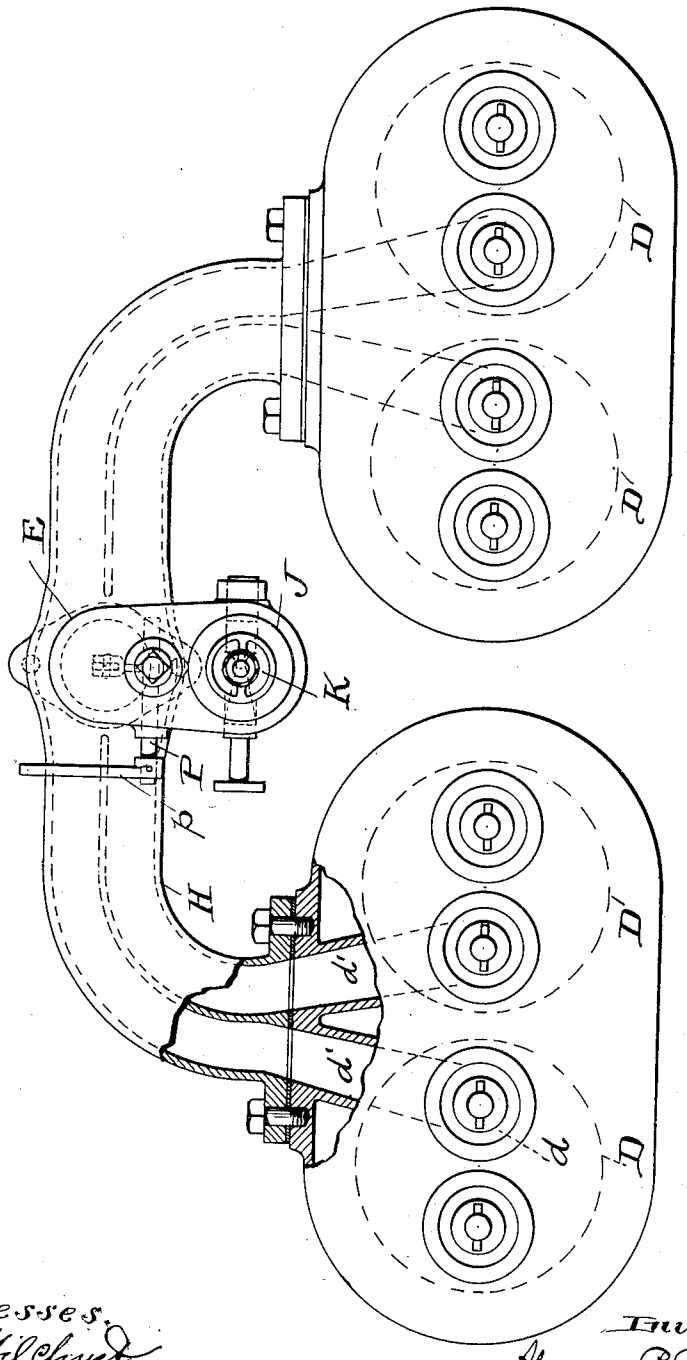

Fig. 1.

Witnesses.
E. B. Gilchrist.
H. B. Sullivan

Inventor
Hanson P. Brush
by Thurston & Kuis
Attorneys

A. P. BRUSH.

MIXTURE SUPPLYING APPARATUS FOR INTERNAL COMBUSTION ENGINES.

APPLICATION FILED MAY 8, 1911.

1,112,257.

Patented Sept. 29, 1914.

2 SHEETS—SHEET 2.

Fig. 2.

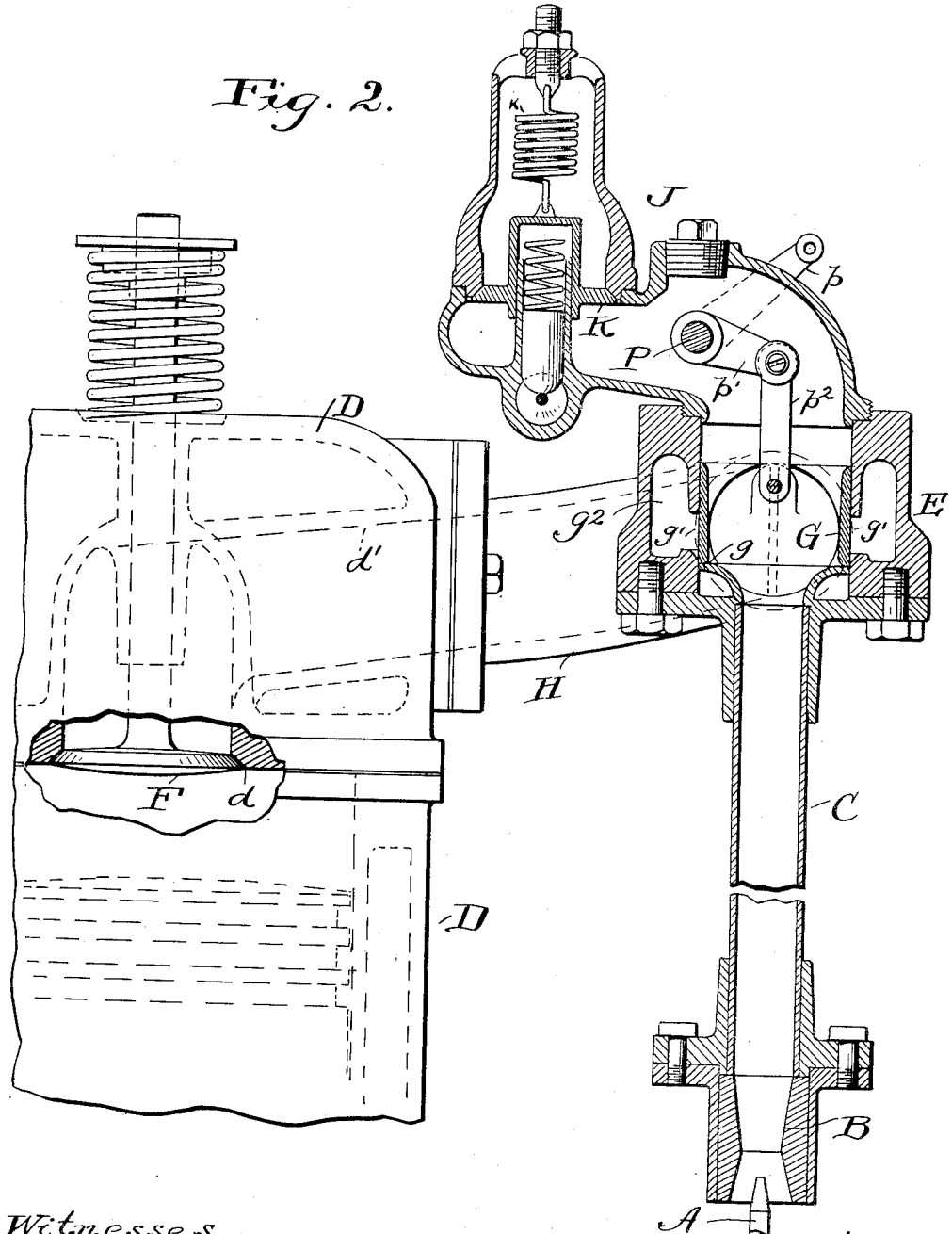

Witnesses:
E. B. Gilchrist.
H. R. Sullivan

Inventor
Hanson P. Brush
by Thurston & Lewis
Attorneys

UNITED STATES PATENT OFFICE.

ALANSON P. BRUSH, OF FLINT, MICHIGAN.

MIXTURE-SUPPLYING APPARATUS FOR INTERNAL-COMBUSTION ENGINES.

1,112,257. Specification of Letters Patent. Patented Sept. 29, 1914.

Application filed May 8, 1911. Serial No. 625,867.

To all whom it may concern:

Be it known that I, ALANSON P. BRUSH, a citizen of the United States, residing at Flint, in the county of Genesee and State of Michigan, have invented a certain new and useful Improvement in Mixture-Supplying Apparatus for Internal-Combustion Engines, of which the following is a full, clear, and exact description.

In automobiles propelled by internal combustion engines, the float chamber of the carbureting device is placed below the inlet ports of the cylinders. This is necessary when gasolene is fed by gravity from the supply tank to the float chamber, and it is desirable, even when the gasolene is fed under pressure to said float chamber. The spray nozzle, through which the fuel is drawn into the moving air stream, is of necessity placed at about the same level as the float chamber. The fuel (usually gasolene), whether in the form of a spray or vapor, must be lifted to the height of the cylinder inlet ports by this moving air stream. The lifting power of the air stream depends upon its velocity. In all prior constructions this air flows slowly when the engine is throttled low, or when the engine is heavily loaded and the throttle is wide open; and therefore its lifting power is small. If all of the fuel sprayed by the nozzle into the air stream were immediately vaporized (as commonly it is in warm weather, and with high grade gasolene) the lifting power of a slow moving air stream would be sufficient. But in cold weather, and with inferior gasolene (and, unfortunately, the quality of the generally obtainable gasolene is constantly deteriorating) the gasolene spray vaporizes slowly. The lifting power of a slow moving air stream is not sufficient to lift this spray. As a result, a considerable proportion of this spray, under the conditions stated, will be condensed on the wall of the conduit through which the air stream flows. Some of this condensed fuel will run down this conduit, and out of the air inlet opening, and be lost. Under such conditions the engine will get an insufficient fuel supply and may become stalled. If, however, this condensed spray is not lost in the manner stated, it will be vaporized irregularly when the conditions of use are changed so that the velocity of the air stream is increased, and this will cause the mixture to vary in quality in an uncontrollable and irregular manner, and will cause the engine to run badly.

The object of this invention is to provide a construction and disposition of the parts which control the formation and distribution of the explosive mixture to the several cylinders, such that even if low grade gasolene is used in cold weather, the undesirable results referred to will not occur even when the air stream is moving slowly through the carbureting device.

The invention consists in providing a single and relatively small air conduit leading upward from the carbureter to a distributing point above the inlet ports of the cylinder, said conduit being of such diameter that even when the engine is going slowly, the velocity of the upflowing air stream will be great enough to lift the unvaporized gasolene spray; in locating the air throttling valve (and the auxiliary air valve if one be used) adjacent to this elevated distributing point; and in providing manifold tubes extending in a downwardly inclined direction from the distributing point to the several inlet ports of the engine cylinders. The result will be that all of the gasolene spray will be lifted to this high distributing point by the rapidly flowing air stream in the small upgoing air conduit, and will be delivered into the downwardly inclined manifold tubes. If said gasolene spray then be condensed on the walls of the manifold tubes, it cannot be lost. In fact, it will be subject to the vaporizing action of the air admitted to the manifold tubes by the elevated throttle valve and auxiliary air valve, and will all be vaporized in such manner as to produce an explosive mixture which is substantially the same in quality when the engine is running at high or low speed.

In the drawing, Figure 1 is a plan view partly broken away and sectioned of a four cylinder internal combustion engine associated with this invention. Fig. 2 is a vertical sectional view through the mechanism for controlling the formation and distribution of the explosive mixture,—this view showing also a fragment of one of the cylinders.

Referring to the parts by letters, A represents the spray nozzle of a carbureter; and B the Venturi tube thereof. Inasmuch as

this invention has nothing to do with any particular form of carbureter but only with the part intermediate of a suitable carbureter and the engine cylinders, it is not thought necessary to show any more of a carbureter.

Four engine cylinders are shown arranged in a row as shown and each is indicated by D. The valve-controlled inlet port *d* of each is in the cylinder head, which head contains also a passage *d'* extending from the inlet port to the side wall of the cylinder in an upwardly inclined direction. This passageway forms the terminal end of the vapor inlet conduit. The inlet valves F open by moving inward.

E represents the throttle valve casing which is connected with the upper end of a tube C, said tube being connected at its lower end with the Venturi tube B. The chamber in this casing E is the highest part of the mixture distributing system; and it receives the mixture rising through the single tube C. The throttle valve G is a balanced tubular cylinder which is open at both ends; and by a downward movement closes against a seat *g* and covers, when closed, the annular port *g'* leading into the annular throttle valve ceasing chamber g^2. The manifold pipes H, H, are connected with this chamber g^2; and extend in a downwardly inclined direction to the cylinders, the low ends of said branches being connected with the several cylinders and over the outer ends of the passageways *d'* so that the latter are substantially downwardly inclined continuations thereof. Any suitable throttle valve operating mechanism may be employed, as for example, the rock shaft P mounted in the throttle valve casing, having an operating arm *p* outside the casing, and another arm *p'* inside the casing and connected by a link p^2 with the throttle valve.

Attached to the throttle valve casing above the throttle valve is the auxiliary air valve casing J containing a spring-controlled auxiliary air valve K. There is nothing special in the construction of this auxiliary air valve or its casing,—the only feature of novelty being its location, as shown, with respect to the parts with which it coöperates.

It will be noticed that the upwardly extended tube C is of small diameter compared with that of the manifold tubes. In the construction shown the cross sectional area of the tube C is about half that of each branch of the manifold tubes. This precise relative size is not, of course, material to the invention and may be varied within rather wide limits which are to be determined by the conditions of the proposed use as, for example, whether it is to be used altogether in a warm climate or altogether with low grade gasolene or whether the device must be arranged to operate in warm weather with high grade gasolene and in cold weather with low grade gasolene. The relation of diameters shown and above specified is such as practical experience has shown to be very efficient under all possible conditions of use.

In the use of this device air may be drawn freely into the lower open end of the Venturi tube by the suction action of the engine pistons. This will draw the gasolene spray from the nozzle. Because of the relatively small diameter of the tube C the air stream flowing through it will, of necessity, move very rapidly as compared with the velocity of the air stream in the manifold tubes even when the engine is throttled low. This will result in the carrying upward of the gasolene vapor and spray as well, until the latter is delivered past the valve G into the annular chamber g^2 in the throttle valve casing which is the highest part of the mixture distributing system. From this point the conduits through which it is connected with the inlet ports of the several cylinders have a continuous downward inclination. When throttle is well open and the speed of the engine is high, the auxiliary air valve K will be drawn open in opposition to its spring *k* and auxiliary air will flow down through the throttle valve under its lower edge and thence through the annular port *g'* into the chamber g^2. From there it mixes with the flowing air stream and assists in the vaporization of the gasolene.

In the particular construction shown two manifold pipes H extend from opposite sides of the throttle valve chamber and each supplies two engine cylinders,—and each of these pipes is divided by a partition *h*, so as to really provide each cylinder with an independent conduit. This is a desirable construction but not a necessary one.

Having described my invention, I claim:

1. The combination with an internal combustion engine having plural cylinders each having in its head a mixture inlet port, and downwardly opening inlet valves to said several ports, individual mixture distributing conduits which extend at an inclination upward from said several ports to a common distributing chamber, a single mixture supplying tube which extends from said common distributing chamber downward below said inlet ports and to the source of mixture supply, and a throttle valve in said distributing chamber, said single mixture supplying tube being of less cross sectional area than each of the individual mixture distributing conduits.

2. The combination with an internal combustion engine, and a fuel spraying nozzle which is located below the plane of the inlet port of said engine cylinder, of a relatively small upwardly extended tube into the lower end of which the spray nozzle

discharges, a throttle valve casing with which the upper end of said tube is connected and which is located above the inlet port of the engine cylinder, a throttle valve in said casing, and a conduit leading in a downwardly inclined direction from said throttle valve casing to the inlet port of the engine cylinder,—said upwardly extended tube being of smaller diameter than said conduit.

3. The combination with an internal combustion engine, and a fuel spraying nozzle which is located below the plane of the inlet port of said engine cylinder, of a relatively small upwardly extended tube into the lower end of which the spray nozzle discharges, a throttle valve casing with which the upper end of said tube is connected, and which is located above the inlet port of the engine cylinder, a throttle valve in said casing, an auxiliary air valve casing connected with and supported by the throttle valve casing and containing a spring controlled auxiliary valve, a conduit leading in a downwardly inclined direction from said throttle valve casing to the inlet port of the engine cylinder, said upwardly extended tube being of smaller diameter than said conduit.

4. The combination with a plural cylinder internal combustion engine, and a single fuel spraying nozzle, which is located below the plane of the inlet port of said engine cylinder, of a relatively small upwardly extended tube into the lower end of which the spray nozzle discharges, a throttle valve casing with which the upper end of said tube is connected, and which is located above the inlet ports of the engine cylinders, a throttle valve in said casing, and several independent conduits which lead in downwardly inclined directions from said throttle valve casing to the several inlet ports of the engine cylinders, said upwardly extended tube being of smaller diameter than said conduits.

In testimony whereof, I hereunto affix my signature in the presence of two witnesses.

ALANSON P. BRUSH.

Witnesses:
E. L. THURSTON,
H. R. SULLIVAN.