March 1, 1949. C. H. NEER 2,462,888

CASE FILLING MACHINE

Filed April 14, 1944 8 Sheets-Sheet 1

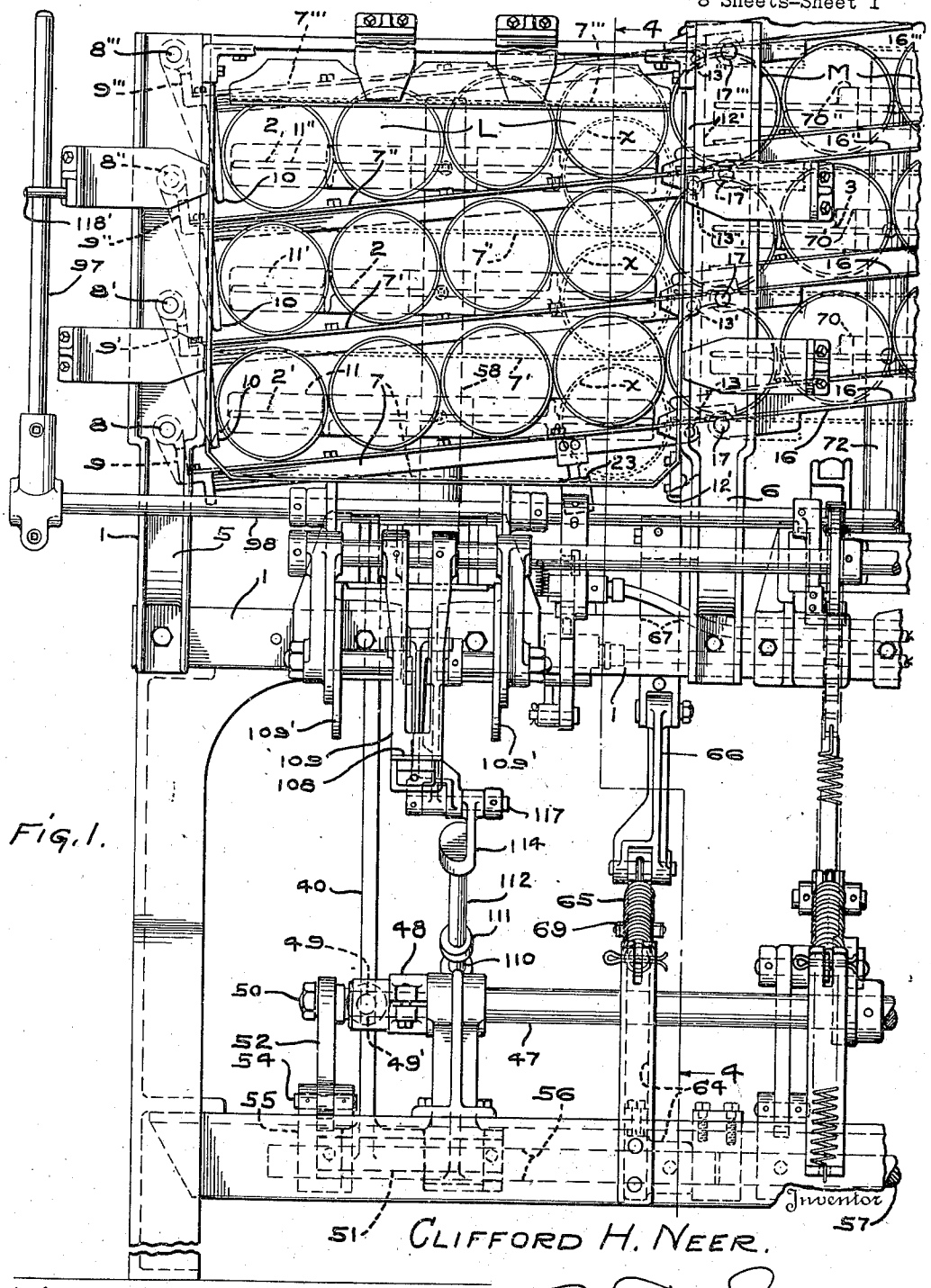

Fig. 1.

Inventor

CLIFFORD H. NEER.

Witness

By Edwin T. Samuels

Attorney

March 1, 1949. C. H. NEER 2,462,888

CASE FILLING MACHINE

Filed April 14, 1944 8 Sheets-Sheet 2

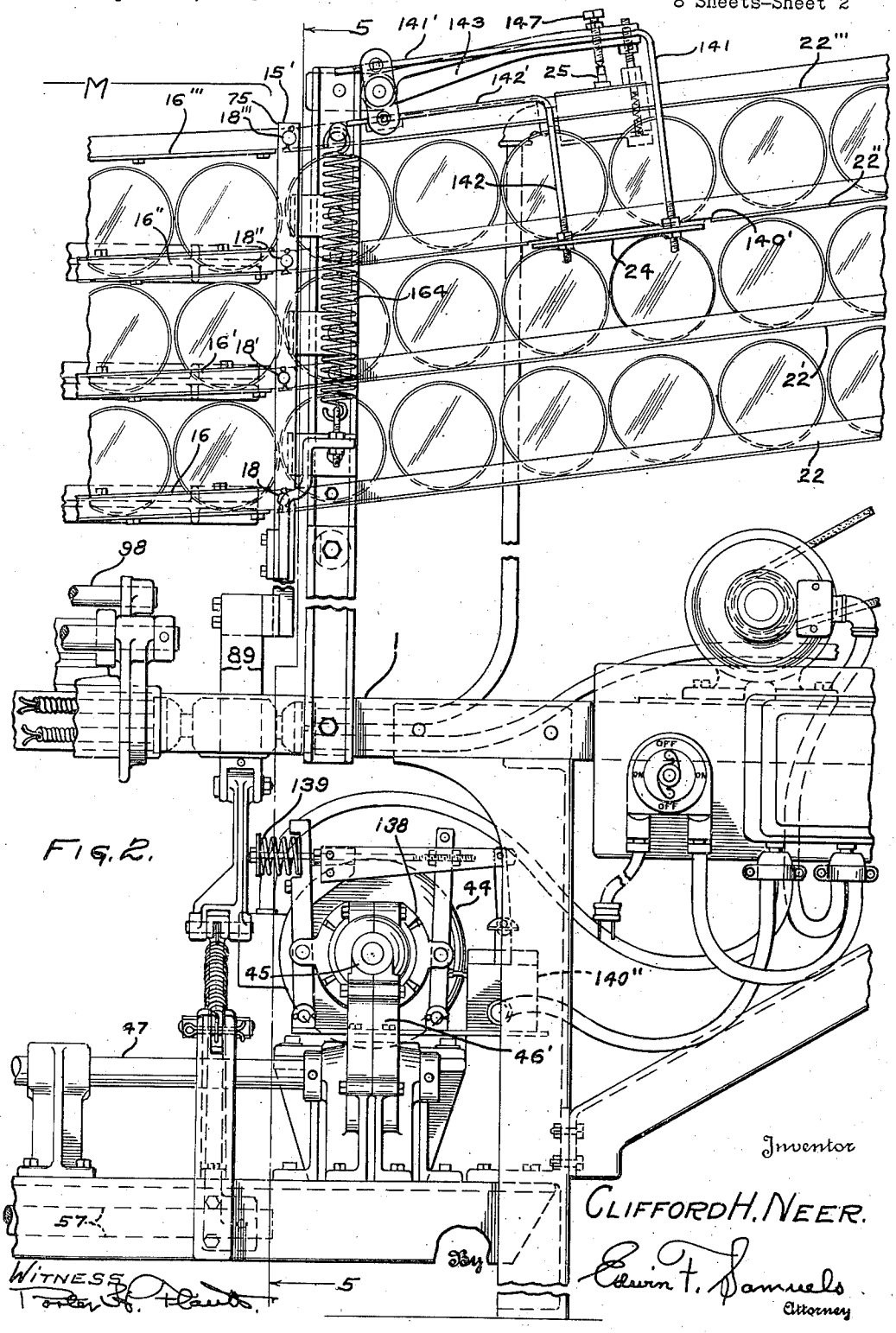

FIG. 2.

Inventor

CLIFFORD H. NEER.

By Edwin T. Samuels

Attorney

Witness

March 1, 1949. C. H. NEER 2,462,888

CASE FILLING MACHINE

Filed April 14, 1944 8 Sheets-Sheet 3

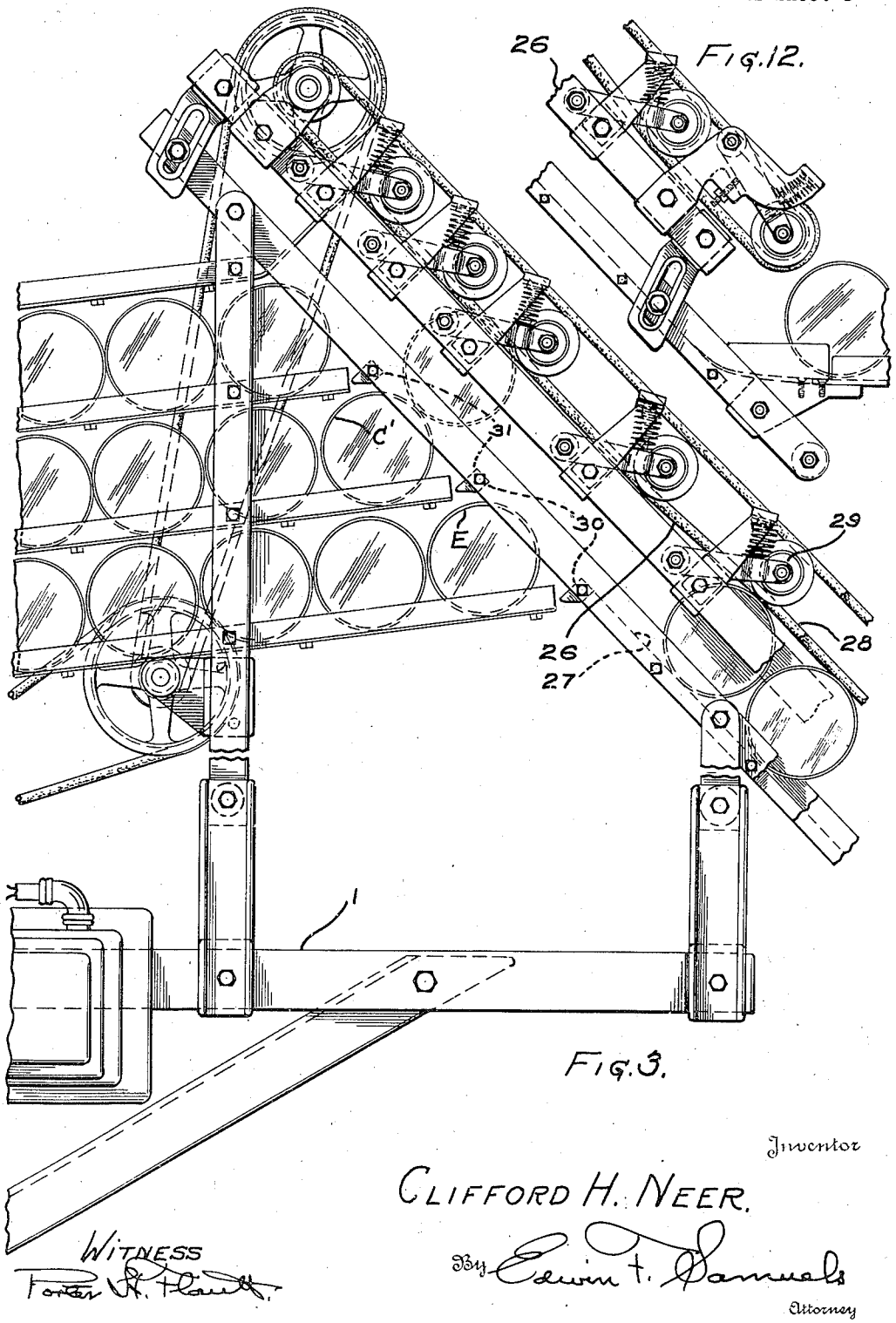

FIG. 12.

FIG. 3.

Inventor

CLIFFORD H. NEER.

By Edwin T. Samuels

Attorney

WITNESS

Porter W. Hall

March 1, 1949. C. H. NEER 2,462,888

CASE FILLING MACHINE

Filed April 14, 1944 8 Sheets-Sheet 4

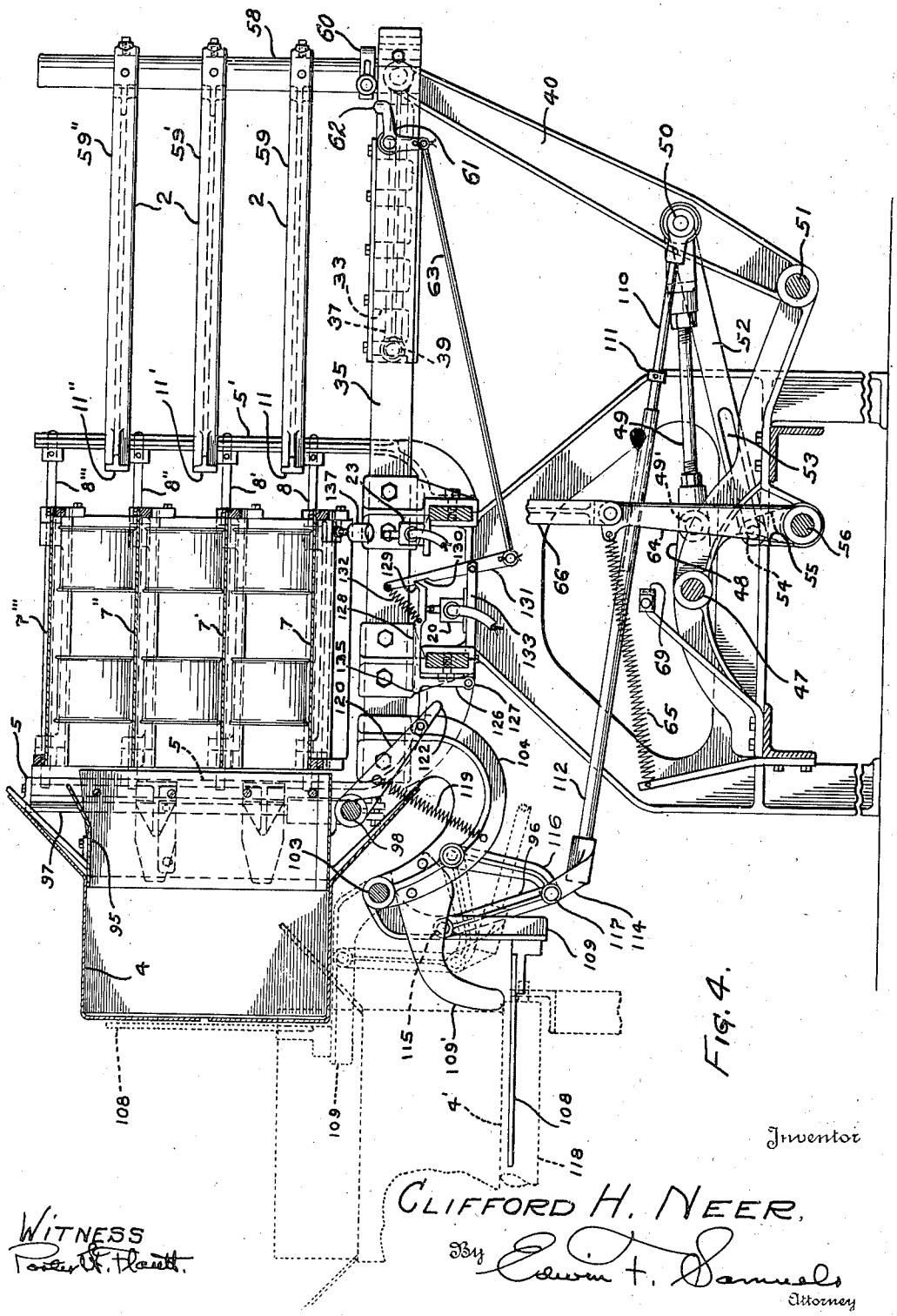

Fig. 4.

Witness
Paul A. Hewitt.

Inventor
Clifford H. Neer,
By Edwin T. Samuels
Attorney

March 1, 1949. C. H. NEER 2,462,888

CASE FILLING MACHINE

Filed April 14, 1944 8 Sheets-Sheet 5

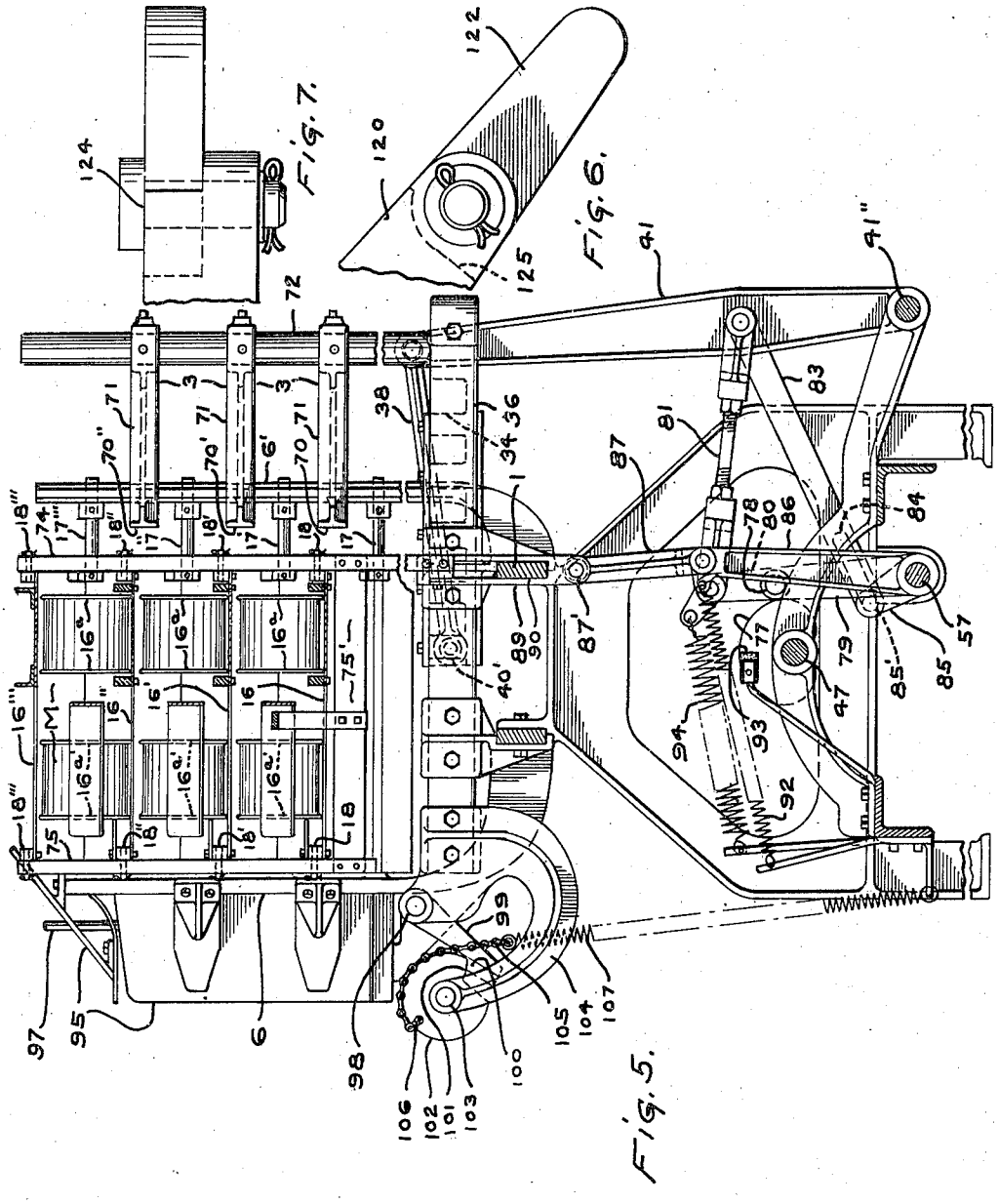

FIG. 5.

Inventor

CLIFFORD H. NEER.

By Edwin T. Samuels

Attorney

WITNESS

Porter H. Faust

March 1, 1949. C. H. NEER 2,462,888

CASE FILLING MACHINE

Filed April 14, 1944 8 Sheets-Sheet 6

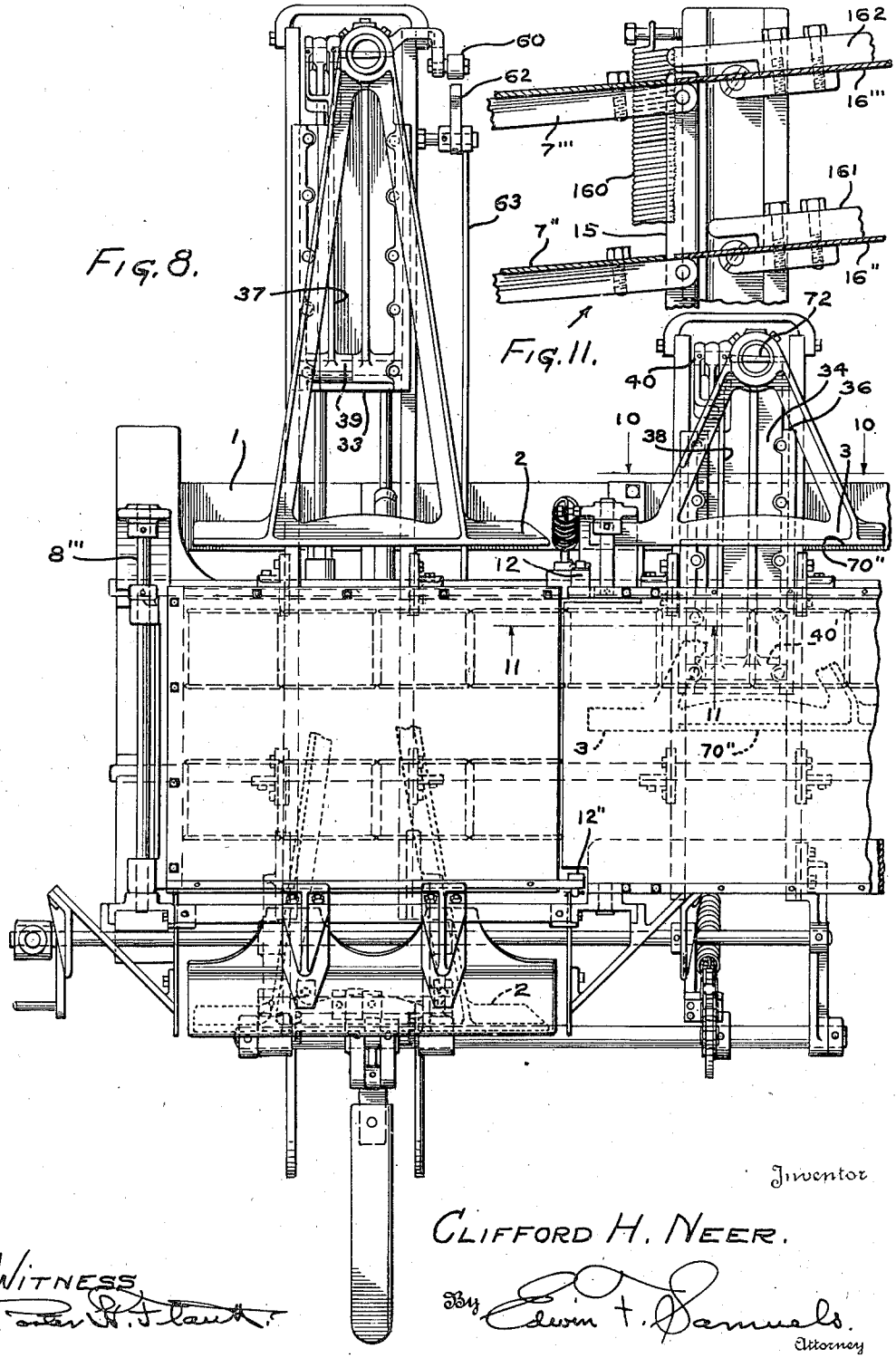

Fig. 8.

Fig. 11.

Inventor

CLIFFORD H. NEER.

By Edwin T. Samuels.

Attorney

Witness

March 1, 1949. C. H. NEER 2,462,888

CASE FILLING MACHINE

Filed April 14, 1944 8 Sheets-Sheet 7

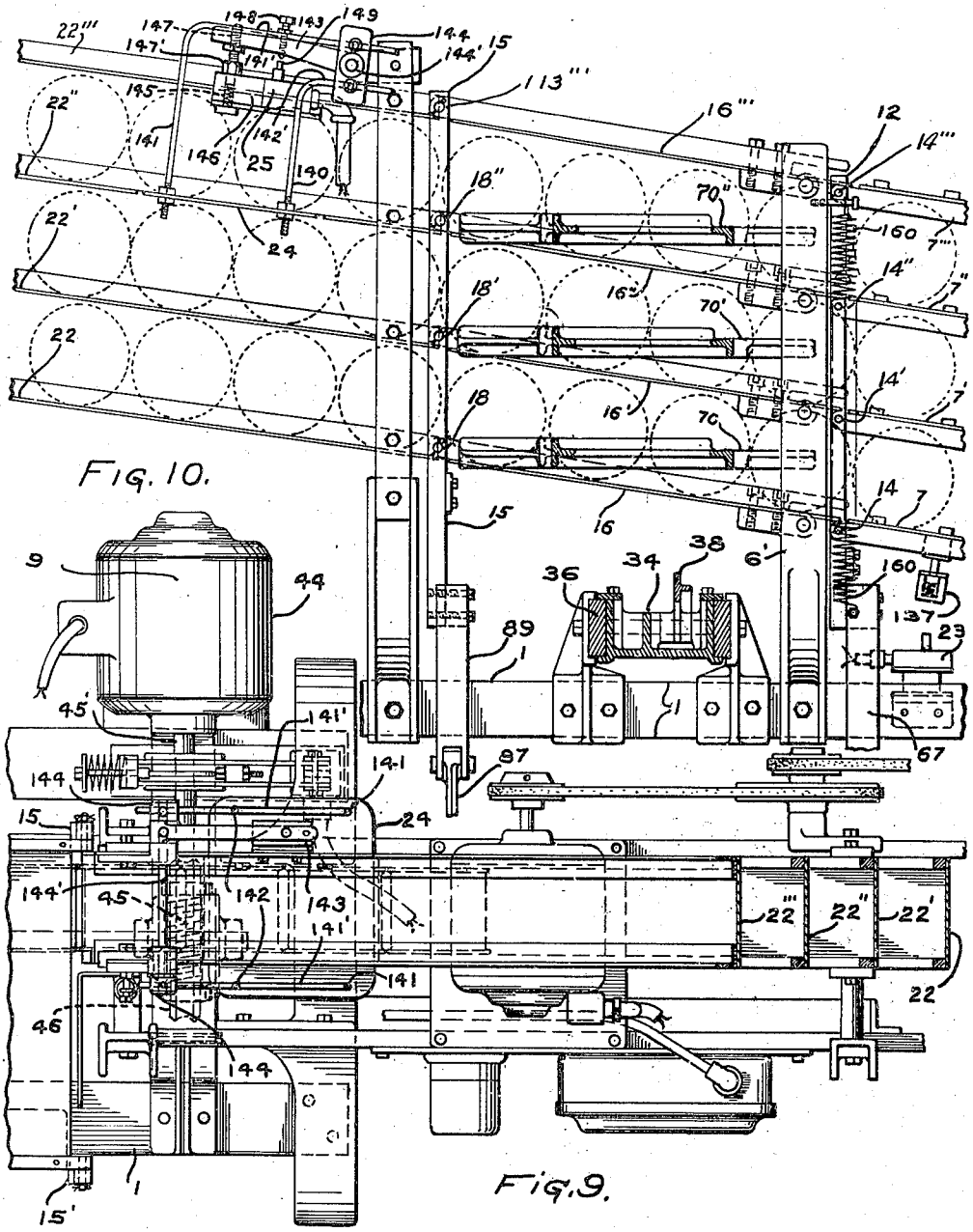

FIG. 10.

FIG. 9.

Inventor

CLIFFORD H. NEER.

By Edwin T. Samuels

Attorney

WITNESS

March 1, 1949. C. H. NEER 2,462,888

CASE FILLING MACHINE

Filed April 14, 1944 8 Sheets-Sheet 8

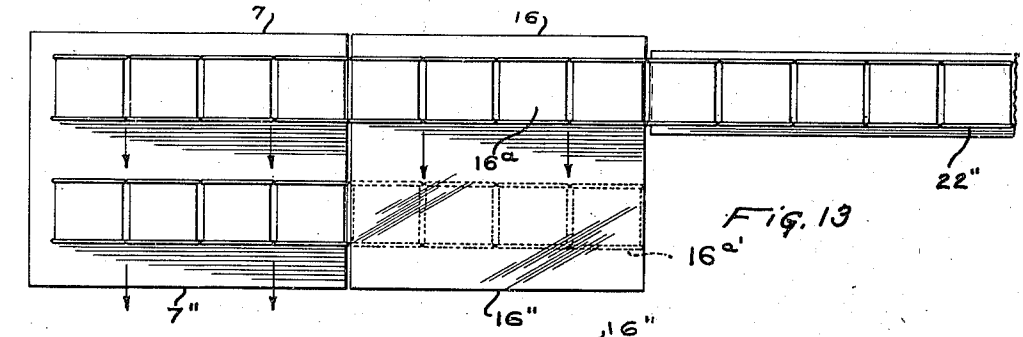

Fig. 13

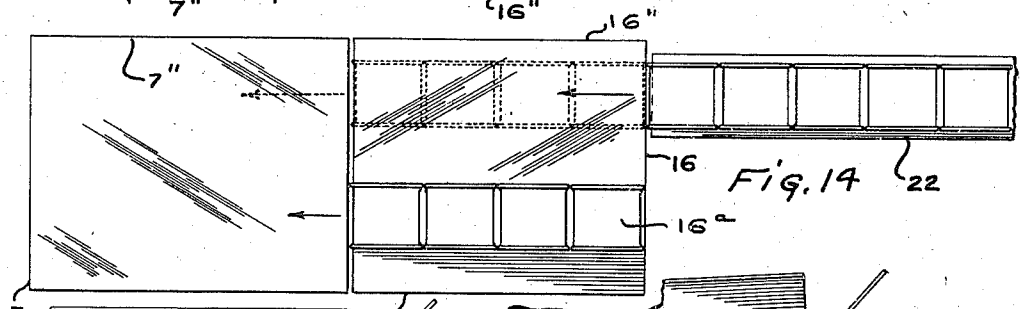

Fig. 14

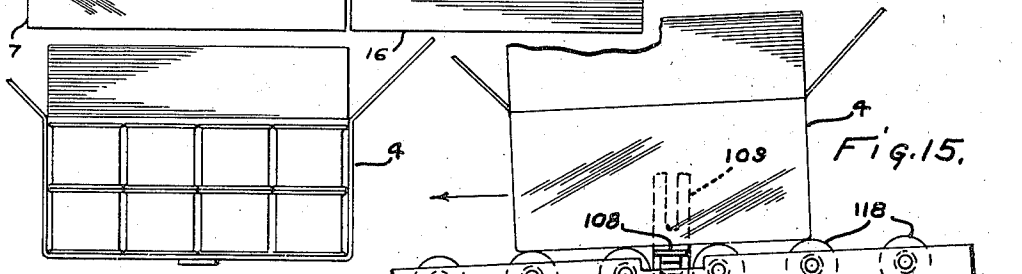

Fig. 15.

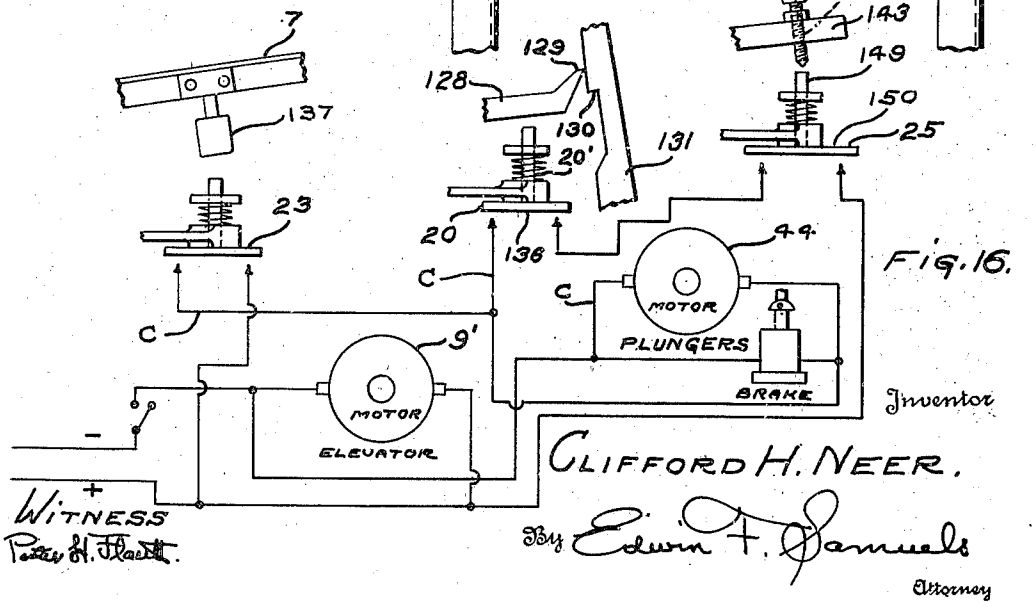

Fig. 16.

Inventor

CLIFFORD H. NEER.

By Edwin F. Samuels

Attorney

WITNESS

Peter H. Plaskett

Patented Mar. 1, 1949

2,462,888

UNITED STATES PATENT OFFICE

2,462,888

CASE FILLING MACHINE

Clifford H. Neer, Baltimore, Md., assignor to The Burt Machine Company, Baltimore, Md., a corporation of Maryland

Application April 14, 1944, Serial No. 530,971

22 Claims. (Cl. 226—15)

1

The invention relates to the filling of cases or cartons with cans, or other packages which can be fed by rolling, the term "can" being used for convenience to include any such package.

In this, as in other operations incident to the production and distribution of canned goods and the like, the time of the operator and the floor space occupied by the machine, constitute important elements in the cost of production.

The object of the invention is to increase the actual speed with which the cans are placed in the cases and also to prevent loss of time of breakdowns and to increase the uniformity of operation preventing the delivery of partially filled cases and the like whereby the output of filled cases per machine per unit of time is increased, thus increasing the output of each operator and of each unit of floor space, whereby the total cost of the product is reduced.

The attainment of these and other objects is dependent on new combinations of parts whereby new and improved results are attained in connection with the various steps of which the case-filling operation is composed.

A machine embodying illustrative examples of the new construction, arrangement and combinations of the invention on which the new and improved results above outlined are believed to be dependent is illustrated in the accompanying drawing, comparatively wide variation as to form and arrangement being contemplated.

An accomplishment which constitutes an important contribution to the speed of operation is the formation of a complete load ready to pass into the path of the load-transfer plunger near the end of each return stroke of the latter, whereby each full stroke performs a complete case-filling operation. Other important accomplishments relate to the control whereby partly filled cases and stoppages due to breakdowns are prevented.

In the drawings

Fig. 1 is a side elevation of the front end of the machine looking from the position of the operator who places the cases or cartons in receiving position, the machine being broken away at the right for convenience of illustration.

Fig. 2 is a side elevation looking in the same direction and illustrating the center section of the machine immediately to the rear or the right of the portion shown in Fig. 1 and continuous therewith.

Fig. 3 is a view of the rear end of the machine, the portion illustrated joining the portion shown in Fig. 2 and being continuous therewith.

2

Fig. 4 is a transverse section on the line 4—4 in Fig. 1 looking to the left in said figure.

Fig. 5 is a section on the line 5—5 in Fig. 2 looking to the left in said figure.

Figs. 6 and 7 are detail views of the operative end or tongue of the switch actuating lever in Fig. 4.

Fig. 8 is a top plan view of the front end of the machine corresponding to Fig. 1, but extending rearwardly beyond the same.

Fig. 9 is a top plan view of the rear end of the machine continuous with and extending rearwardly from Fig. 8.

Fig. 10 is a sectional elevation taken on the line 10—10 in Fig. 8, looking in the direction of the arrows, i. e. oppositely to Fig. 1, and showing portions of the machine in elevation.

Fig. 11 is a fragmentary section on the line 11—11 in Fig. 8 looking in the direction of the arrows therein.

Fig. 12 is a side elevation corresponding to Fig. 3 and showing the lower end of the elevator which is removed or omitted from Fig. 3.

Fig. 13 is a diagrammatic plan showing the shelves and ways with the cans thereon in the position which they take just prior to the forward stroke of the plungers.

Fig. 14 is a similar view showing a filled case, the cans being in the position which they assume immediately after the forward stroke of the main plunger, or load-transfer plunger, the return stroke of the short-stroke, or load-forming plunger, having been not quite completed, the magazine shelves not having been raised, the second layer of cans in the magazine being indicated in broken lines as not yet having advanced into the magazine.

Fig. 15 is a fragmentary view of the case conveyor with a filled case thereon, the position of the case-holding arm at the time of delivery of the filled case to the ways being shown.

Fig. 16 is a circuit diagram in connection with which are shown fragmentarily, the starting switch, the shelf-protecting safety switch and the full-case-stop-motion switch.

Referring to the drawings by numerals, each of which is used to indicate the same or similar parts in the different figures, and having particular reference to Figs. 1, 2, 3 and 8, the first three of which figures show the entire machine in side elevation, Fig. 8 showing the front half of the machine in plan, the construction shown comprises, an elongated frame 1, on which are mounted three series of vertically spaced elongated shelves, to be further described. These shelves

are shown as inclined downwardly from the rear end of the machine at the right in Fig. 3 to the front end of the machine at the left in Fig. 1, the long dimensions of the shelves extending from the rear toward the front of the machine.

The shelves referred to as ways are stationary as to the rear portion, or in feed end, of the machine, two sets of shelves, i. e. those at the front in the path of the main or load-transferring plunger to be described as comprising the load-supporting shelves, and those immediately to the rear of said plunger path, in the magazine space M, being preferably hinged at their forward ends to swing downwardly toward horizontal position as more fully hereinafter described. As shown they are inclined downwardly and forwardly, the inclined position shown being referred to for convenience as the "normal position," the lower position in which the shelves approach the horizontal being the position in which the transfer of the load of cans into the cases or cartons in the direction of their axes to be more fully discussed takes place, likewise the movement of a number of cans in the magazine corresponding to half the load from the path of the feed to permit the other half of the load to advance into the magazine.

The main plunger 2 is shown in front elevation at the left in Fig. 1 in broken lines and in plan in Fig. 8 in which it appears in full lines. This plunger is also referred to as the "load-transferring plunger" to distinguish it from the secondary or load-forming plunger 3 also shown in broken lines in elevation in Fig. 1 and in full lines in top plan view in Fig. 8. The main plunger 2 which transfers the load of cans into the cartons or case, as more fully hereinafter described, moves from a position on one side of the shelves as shown in Fig. 8 to a position in which it extends beyond the shelves on the opposite side, i. e. toward the observer in Fig. 8, whereby the load of cans is transferred from the shelves through the funnel into the carton which is indicated at 4 in Fig. 14, and the secondary or short-stroke plunger 3 moves from the withdrawn position in which it is shown in Fig. 8 to the broken line position in said figure, the forward position of the plunger 2 also being shown in broken lines in said figure, and is more fully hereinafter explained. The secondary plunger in the preferred form shown, which is subject to variation, makes its full forward and return stroke while the primary or long-stroke plunger is advancing, the said long-stroke plunger being retracted while the secondary or short-stroke plunger is stationary in its withdrawn position as shown in full lines in Fig. 8.

Referring more specifically to the details of construction, the upright portions of the frame indicated by reference characters 5 and 6 at the front of the machine, see Fig. 1 enclose the load-forming mechanism also referred to as the path of the primary or load-transferring plunger. These uprights 5 and 6 enclose three or any suitable number of shelves, one above the other, indicated by reference characters 7, 7' and 7'' and above these shelves in the form shown and similarly mounted is a cover-plate 7'''.

These shelves, 7, 7' and 7'' and the cover-plate 7''' which are spaced vertically by a distance approximately greater than the diameters of the individual cans to be handled are pivoted on shafts, see the plan view in Fig. 8 as well as the elevation Fig. 1, which extend horizontally across the machine transversely to the direction of can

feed which is herein referred to as forward, the direction of the plunger stroke being transverse to the feed. These shafts 8, 8', 8'' and 8''' carry swingably mounted thereon depending bell-crank levers 9, 9', 9'' and 9''' to which are attached the shelves and cover-plates 7, 7', 7'' and 7''' extending rearwardly from said shafts in a general direction which may be termed approximately horizontal. In the form of machine shown the shelves are adapted to swing downwardly to and upwardly from the horizontal position in which they are shown in broken lines in Fig. 1 through an arc which in the machine shown is approximately 8 degrees to the full line position in which they are also shown in said figure, and each of the bell-cranks 9, 9' etc. is provided adjacent the forward end of the corresponding shelf with a depending stop plate 10 which prevents the passage of the cans composing the load beyond the path of the plunger 2.

It is of importance to note that at the time of the advancement or feeding of the cans by rolling the shelves in the load-supporting area L are inclined downwardly and to the left in Fig. 1, i. e. downwardly and forwardly and that during the advance and withdrawal of the primary or load-transfer plunger 2, the shelves are horizontal providing for the satisfactory arrangement of the load of cans in the carton or case and preventing any interference of the shelves with the motion of the plunger and consequent breakage of parts whereby the machine might be thrown out of operation and rendered useless until repairs could be provided. It may be noted at this point that in the machine herein shown for example the cans are in three tiers providing for three shelves, 7, 7' and 7'' and the plunger 2 is provided with three horizontally elongated can-contacting members 11, 11' and 11'' which as shown are horizontally disposed to cooperate with the shelves 7, etc. in their horizontal position in which the cans are advanced into the cartons in the direction of their axes, and the magazine M is similarly arranged for formation of a complete load therein.

The shelves 7 etc. are necessarily lowered and raised in time with the strokes of the plunger 2 and the portion of the mechanism for raising and lowering the shelves will now be described.

In the form of the invention shown the rearward end of each shelf, 7, 7', and 7'' and the cover-plate 7''' is pivotally connected to vertically movable uprights 12 and 12' being mounted for this purpose on short horizontal stud-like members 14, 14', 14'' and 14''' at one side of each shelf, the studs at the left in Fig. 1 being numbered 13, 13', 13'' and 13''' and it may also be noted that the upright 5 at the front side of the load-forming area supports one end of each of the horizontal transverse shafts 8, 8', 8'' and 8''' previously referred to, the other ends of these shafts being supported in bearing on the corresponding upright 5' as seen at the right in Fig. 4.

Referring now to Figs. 2 and 3, it will be noted that to the right of the load-forming area L, which is enclosed between the uprights 5 and 5' and 6 and 6', the latter being shown in Fig. 5, there is a second set of shelves which during the formation of the load are inclined downwardly to the left, the inclination of these shelves being to the best advantage similar to the inclination of the shelves 7, 7' and 7'' so the exact angle may be regarded as immaterial. This area is referred to for convenience as the magazine and extends backwardly from the load-forming area L, i. e. the

uprights 6 and 6' to the vertically reciprocating uprights 15, 15', the uprights 5, 5' and 6, 6' being a stationary portion of the frame. In this connection it may be noted that in the machine shown which is for example only the shelves in the load-forming area are of a width at right angles to the plane of Figs. 1, 2, and 3 exceeding the axial length of two cans and they are in fact intended to carry two lines of cans to conform to the present practice in which the load is two cans wide or deep in the direction of the axis and three cans wide in each direction of the diameter for which reason there are as aforesaid three shelves in the load-forming area though this arrangement is dependent only on the size of the cases in relation to the size of the cans to be placed therein, i. e. the number of cans in a case and their arrangement.

In the magazine area indicated by reference character M, the shelves and cover-plates are designated by reference characters 16, 16', 16'' and 16''' respectively in Fig. 1 and these shelves are pivotally mounted at their forward ends which are at the left in Fig. 1. For this purpose horizontal transverse shafts 17, 17', 17'' and 17''' are mounted in the stationary uprights, i. e. provided with bearings supported on said uprights indicated by reference characters 6 and 6', see Figs. 1 and 5, and the respective forward ends of said shelves are mounted on said shafts. These magazine shelves 16, 16', 16'' and coverplate 16''' are mounted or pivoted at their rear ends which are at the left in Fig. 2 on studs 18 and 18', 18'' and 18''', see Figs. 2 and 5, said studs being carried in the vertically reciprocating uprights 15 and 15' which are actuated in a manner to be hereinafter described in connection with the operation of the shelves 7' etc. and the primary and secondary plungers 2 and 3.

It is of interest to note at this time that there is a switch 23 shown in Figs. 1 and 4 and also in the circuit diagram Fig. 16, the actuating member for which is carried by the shelf 7 whereby the actuating circuit to be described is closed when the shelf 7 is rotated downwardly toward horizontal position out of the path of the plunger 2 to prevent contact of the piston members 11 with the shelves 7. This is a safety device to be later discussed in connection with the description of the electric system which operates the machine. Said machine is in the preferred form shown stopped and started between strokes by the functioning of said circuit avoiding the use of the single revolution clutch which has been almost universal in its application to this type of machine.

In order to complete the discussion of the shelves or ways in the magazine whereby the cans are presented to the load-supporting shelves in the path of primary plunger by which they are transferred into the cartons, it may be desirable to again point out that the shelves 7, 7' and 7'', as well as the cover-plate 7''', in the load-supporting space L and the magazine shelves 16, 16' and 16'', as well as cover-plate 16''' are, in the machine illustrated, of a width corresponding to, but exceeding by a considerable margin, the axial length of two cans, and each set of shelves, i. e. in the load-supporting area and in the magazine, exceeds in height or vertical extent three times the diameter of the cans being handled, it being understood that some variation in diameter is permissible without change of the machine and that all of these dimensions are dependent on the number and arrangement of the cans in the cases or cartons.

Beyond the magazine to the right in Figs. 1, 2, and 3, and according to the terminology thus far used, to the rear thereof, is a set of three tiers of feeding shelves or ways 22, 22' and 22'' and a cover-member or guide 22'''. These in the form of invention shown are inclined in the same general direction as are the shelves 7 etc. and 16 etc. in their inclined or feeding position, the exact inclination in all instances being subject to variation. These shelves 22 correspond in width to the axial length of a single can, as best shown in plan in Figs. 13 and 14, and these feed to the side of the magazine shelves which is remote from the observer in Fig. 1, the purpose of the secondary or magazine plunger 3 being to change the single layer of cans delivered by the feeding shelves 22, 22' and 22'' to a double layer of cans in the magazine ready for advancement into the load-supporting area L. In other words the plunger 3 moves every alternate half load of cans which comes into the magazine, forwardly in the direction of the plunger stroke out of the path of the feed, i. e. out of line with the feeding shelves 22' so that another half load can take its place in the magazine on the withdrawal of plunger 3, forming a full load for advancement into the path of the transfer plunger 2.

It is of interest to note that the top feed shelf 22'' contains a yielding platform 24 whereby a switch 25 in the actuating circut C is closed when the top shelf 22'' carries a sufficient number of cans back of the magazine, i. e. in the form of the invention shown are four cans so that a sufficient supply of cans is present on the feeding shelves 22, 22' and 22'' to fill one side of the magazine. This switch is normally open and is, as aforesaid, closed by the weight of the cans on platform 24 so that the machine cannot operate in the absence of a sufficient supply of cans. This mechanism will be further discussed in connection with the electric circuit C but it may be here noted that the feeding shelves or ways 22, 22' and 22'' are supplied with cans by way of an elevator 26 at the right in Fig. 3. This elevator need not be specifically described as it is of a well-known type in which the cans are rolled upwardly along an inclined way 27 being propelled, i. e. rotated, by a friction belt 28 which in the form shown is held in contact with the cans by spring actuated yielding rollers 29. This way 27 extends upwardly and forwardly at a sharp angle to the shelves 22, 22' and 22'' in close relation to their rear ends which are at the right in Fig. 3 and at the top of each shelf there is an opening through the way 27 sufficient to permit the passage of a can, i. e. of a vertical width somewhat in excess of the diameter of the cans being handled. Thus according to the usual operation of such an elevator, the lower shelf 22 is first filled as shown in Figs. 2 and 3 and when this has been accomplished, the end can marked E in Fig. 3 closes the opening 30, when the said shelf is filled, and thereafter the further supply of cans passes upwardly over this can which serves as a support forming part of the way, and the cans then enter or pass onto the shelf 22'. When this shelf is filled, the end can C' closes the opening 31 and thereafter the cans pass onto the shelf 22'' which due to the periodic removal of the cans from the load-forming area L, may not according to the timing of the machine become at any time completely filled. If this should happen, the frictional engagement of the cans by the belt 28 is sufficiently slight to prevent

cramping of the machine or damage to the cans.

That the detector platform 24 in cooperation with the switch 25 prevents the operation of the machine in the absence of a sufficient supply of cans on the top shelf 22'' has already been mentioned and will be further discussed in connection with the electric circuit for actuating the machine and the various stop motions and switches.

The main or load-transferring plunger 2 and the secondary or magazine plunger 3 have already been referred to as cooperating with the enclosing structure L and the magazine structure M respectively. These plungers and their operating mechanism are shown to best advantage in rear elevation in cross sections Figs. 4 and 5 respectively, each plunger being shown in its withdrawn position in plan in Fig. 8 the plungers 2 and 3 also being shown in side elevation in Figs. 1 and 2.

Each of said plungers 2 and 3 has a base portion 33 and 34 respectively and each said base portion slides in a horizontal guide 35 and 36 and each plunger 2 and 3 is actuated or has the actuating thrust communicated thereto by connecting rods 37, 38 which are connected to the base portions of the corresponding plungers by wrist pins 39, 40' which engage the bases at the ends which are forward in the direction of the working strokes of said plungers, thus eliminating any tendency on the part of the sliding base portion to bind in the corresponding ways, it being noted that this is the preferred arrangement, other methods of connecting each plunger to its reciprocating mechanism being feasible though apparently less desirable.

Each of these connecting rods 37, 38 is pivotally connected at its rear end to a corresponding actuating arm 40, 41, Figs. 4 and 5. The preferred method of operation and arrangement of which arms 40 and 41, as here illustrated for example only, will now be separately described together with other mechanisms cooperating therewith for operating the shelves corresponding to the respective plungers.

The plungers and shelves in the preferred form shown are moved by an electric motor 44 shown in elevation in Fig. 2 and in top plan view in Fig. 9, other sources of power to best advantage electrically controlled being usable. The shaft of this motor 44 is threaded to provide worm 45 which engages and operates a worm wheel or gear 46, both of which are best shown in Fig. 9, the worm being also indicated in end view in Fig. 2 and the worm gear being enclosed within the casing marked 46' in Fig. 2. The worm gear 46 in turn is secured to and operates the main plunger shaft 47, shown in Figs. 1, 2, 4 and 5.

Referring now to Fig. 4 it will be noted that the shaft 47 carries secured thereto a crank or crank arm 48, to the outer swinging end of which is pivotally connected by wrist pin 49' a connecting rod 49 which is in turn connected at its outer end as by wrist pin 50 in driving relation to the rocking arm 40. This arm 40 actuates the main or load-transfer plunger 2 whereby during the operation of the motor 44 the arm 40 and the plunger 2 have a full harmonic reciprocating motion.

Wrist pin 50 which moves on an approximately horizontal arc above the stationary pivot 51 of the arm 40, carries the outer swinging end of a second connecting rod 52 which operates the shelves, i. e. rocks them downwardly toward horizontal position, as shown in broken lines in Fig. 1 and returns them to the full line position in said figure. Connecting rod 52 is slotted at 53 in the direction of its length at its end remote from the wrist pin 50 and this slot is engaged by a crank pin 54 at the outer end of a crank 55 operatively secured to the shelf operating shaft 56 of which there are two arranged end to end as best seen in Fig. 1, the second shelp operating shaft being indicated by reference character 57 and forming part of the mechanism which operates the magazine shelves to be later described.

The connection of the plunger base 33 to the upper end of arm 40 by connecting rod 37 has already been described. This base carries at its rear and considered in connection with the direction of the working stroke of the piston, an upright 58 to which are secured parallel forwardly extending horizontal arms 59, 59' and 59'' at the forward end of which are located the can-contacting plunger members 11, 11' and 11'' referred to in connection with the description of the load-supporting shelves 7, 7' and 7''.

This portion of the machine also includes a switch actuating lug 60 adjustably secured near the base of the upright 58 and adapted to engage and operate a bell-crank 61 pivotally mounted on the frame and having a wiper 62 in the path of said lug 60, the said bell-crank as being connected by a connecting rod 63 to a switch actuating mechanism which is tripped by an operator-controlled tripping device in a manner to be further described in connection with the electric circuit.

Referring again to the shelf-operating shaft 56 and its crank-arm 55 and connecting rod 52, it will be noted that there is also mounted on the shaft 56 and secured thereto a substantially upright arm 64 which is given a tendency to the left in Fig. 4, i. e. toward the operator, by a tension spring 65 shown in the form of a coil spring connected to the frame. This arm 64 is also connected by a connecting rod 66 which in connection with the arm 64 has what may be termed a "toggle action" to a vertically sliding bar 67 which encloses a portion of the frame 1, being slotted for a distance greater than the width of said frame to provide for the necesary motion. The upright 15 at the side of the machine opposite the operator, see Fig. 10, is secured to and extends upwardly from said sliding bar 67, the transversely opposite upright bar 15' forming the opposite side of a vertically reciprocating frame to which the opposite edges of the shelves are pivoted by the studs, 13, 13' and 13'', the timing of the shelves 7, 7' and 7'' in relation to the motion of the primary or load-transfer plunger 2 will be understood by examination of Fig. 4.

The action of the spring 65 imparting a constant tendency to the arm 64 to swing to the left in Fig. 4, i. e. toward the operator, has been explained, also the slot 53 which engages the crank-pin 54 at the swinging end of the crank 55. As the rocking arm 40 swings to the left impelled by its crank 48, the pin 54 is released by the motion of the connecting rod 52. The toggle 64, 66 is broken or bent by the yielding of arm 64 to spring 65, and the reciprocating uprights 15 and 15' are moved downwardly lowering the rearward or raised end of the shelves 7, 7', and 7'' in the load-supporting mechanism.

The shelves as thus moved have an effect which will now be explained. The tendency of the cans to roll down the incline of the shelves as shown in Fig. 1, particularly within the path of the load-

transfer plunger, accelerates the operation. The tendency of the cans in the magazine to enter this load-supporting area will be apparent. When the plunger 2 is advanced it is important to have the cans comprising the load and about to be transferred to the case, free of those in the magazine. As each shelf is lowered, its rearmost end as seen in broken lines in Fig. 1 contacts the forward portion of the circumference of the most advanced can on the corresponding shelf in the magazine. Thus the advancement of each of the forward cans on the respective magazine shelves is prevented, it being apparent that the cover-plate 7''' has the same effect in stopping the cans of the top row as the shelves 7 as to the lower rows. It is also of interest that the rearmost can on each shelf in the load-supporting space, i. e. the can at the right of said space in Fig. 1, at this time moves downwardly and comes to rest between the forward rearwardly conveying surfaces of the adjacent cans in the magazine, the final position of each can at the rear end of each shelf being shown in broken lines in Fig. 1 and indicated by reference character X. Also the clearance effected by swinging the shelves downwardly toward horizontal position and applying them as stop members to the forward cans in the magazine is enhanced and the effect of these shelves as stop members is also increased by the advancement to the right, i. e. to the rear of the rear ends of the shelves due to the rearward and downward inclination of the arc through which they swing, and progress of the rearward end of each shelf over the downward and forward curve of the forward upper quadrant of the surface of corresponding forward can in the magazine.

It is also of importance that each shelf may to advantage be in the form of a bell-crank having a depending arm 9 etc. pivoted at its upper end as at 8 whereby the forward end of each shelf and the load thereon moves forwardly as the shelf swings downwardly to said horizontal position. Thus the rearward ends of the shelves not only serve as automatic can stop to prevent advancement of the cans from the magazine during the occupancy of the load-supporting area by the plunger 2 but in the various ways above outlined establish and maintain a most satisfactory clearance between the load and the cans in the magazine. The shelves 16 in the magazine M serve not only as magazine shelves but as feeding ways leading to the respective shelves of the load-supporting space L.

The timing of the shelves relatively to the timing of the plungers is a matter of primary importance, as the plunger members 11 do not register with the spaces between the shelves in the normal inclined position of the latter. More particularly the shelves in their normal inclined position are in the paths of the plunger members 11 and they must be lowered to the horizontal position in which the load is transferred from the shelves 7 to the cartons in order to provide a free path for the plunger members and to prevent cramping and breakage of the machine. To this end it will be noted that the arm 64 in Fig. 4 is free to yield to the spring 65 and swing forwardly breaking the toggle 64, 66 and lowering the shelves as soon as the rocking arm 40 begins to move forwardly. In other words the connecting rod 52 moves to the left and the crank 55, the pin 54 of which is in the slot 53 is permitted to swing counter-clockwise. This crank 55 being secured to the shaft 56, this shaft is turned therewith and the arm 64 being likewise secured to said shaft operates as already outlined breaking the toggle and lowering the shelves 7. It should also be noted that in the withdrawn position the plunger members 11, 11' and 11'' are spaced to the right or backwardly as compared to the direction of their working stroke from the shelves 7 etc. in Fig. 4. Thus there is ample time for the shelves to be moved from the path of the plungers before the latter reach the vertical plane of said shelves.

The member 69 in Fig. 4 is in the nature of a stop in the path of the arm 64 to limit the swing of the latter in a counter-clockwise direction as seen in Fig. 4, whereby the motion of the shelves, or rather the rearward end of the shelves, downwardly is so limited that they move to the horizontal position only, said horizontal position being illustrated in broken lines in Fig. 1. It is not the purpose to limit the invention by this description to a precisely horizontal position of the shelves, or to other details not essential to satisfactory operation of the nature described. The operation of shelves 16 etc. in the magazine space M as to their can-stopping function is in the form shown similar to that described in connection with shelves 7 etc., but this stop function is not essential to every conceivable embodiment of the other features of the invention which are separable into various groups of mechanism which may be variously employed in machines for this general purpose. In the form shown the bell-crank feature incident to the depending arm 9 etc. is omitted from the magazine shelves.

Referring now to the secondary or short-stroke plunger 3 which operates in connection with the magazine M, and is also known as the magazine plunger, which plunger and the actuating mechanism therefor are best illustrated in Figs. 5 and 8, the individual plunger members, Figs. 5 and 8, are indicated by reference characters 70, 70' and 70'', being supported on horizontal forwardly extending arm 71, mounted on and extending forwardly from a rigid upright 72 which extends upwardly from the rear end of the sliding carriage or base 34 which operates transversely to the feed in a suitable horizontal guideway 36. The sliding carriage or base 34 is as already described operated by a connecting rod 38 and this connecting rod, according to the preferred embodiment shown, engages the end of the base or sliding carriage 34 which is forward in the direction of the working stroke of plunger 3, the said engagement being effected by a wrist pin 40' as best shown in Fig. 5. It should be noted at this point that the shelves 16, 16' and 16'' and the cover-plate 16''', like the corresponding members 7, 7', 7'', 7''', are not only pivoted or swingably mounted at their forward ends as by means of shafts 17, 17' and 17'' to a stationary portion 6 of the frame but also are pivotally connected at their rear ends by vertically reciprocating upright members 74 and 75, the pivots being indicated as 18 and 18' and being in the nature of short stud-like members seated in said uprights and having a bearing in suitable lugs on the shelves.

Referring now to the actuating mechanism as shown in Fig. 5, also shown in elevation in Fig. 1 and in plan in Fig. 8, the drive shaft 47 previously described carries secured thereto a cam 77 which in the operation of the magazine plunger or short-stroke plunger serves the same purpose as the crank 48 which operates the long-stroke plunger which moves the load of cans into the cartons, giving, however, a difference of timing

to be described. This cam engages a follower or roller 78 mounted on an arm 79 secured to the shaft 57 which also has secured thereto an arm 80 to the outer swinging end of which a connecting rod 81 is pivotally joined. This connecting rod 81 is operatively engaged at its opposite end with the rocking lever 41 previously described as connected to the base 34 by the connecting rod 38. The rocking arm 41 is pivoted at its lower end to a stationary portion of the frame at 41'', its operation being almost precisely the same as that of the rocking arm 40 except for the difference in timing accomplished by the cam 77 as compared to the crank 48, whereby the plunger 3 including the plunger members 10, 10' and 10'' is advanced through a short stroke, corresponding to half the depth of the load, and retracted during the advancement of the plunger 2, whereby a full load of cans is ready in the magazine to be released and permitted to advance into the load-forming area as soon as the shelves 7 in said latter area are returned to their inclined position ready to receive a new load of cans. The return of the said shelves 7 to said inclined position is preferably timed to take place instantaneously by the operation of spring 65 in Fig. 4 as soon as the plunger members 11 etc. of the plunger 2 have passed out of the upward path of the shelves 7. It may be noted in this connection that the rod 52 with its slot 53 engaging the crank pin 54 releases the latter so that the toggle arm 64 can yield to the spring 65 lowering the shelves as soon as the plunger 3 begins to advance and on the return stroke the left-hand end of said slot in Fig. 4 engages said pin and raises the shelves as aforesaid as soon as the plunger members 11 have cleared the path of the shelves and not until that time.

To return to the operation of the short-stroke or magazine plunger 3 and shelves 16, the actuating mechanism includes a second connecting rod 83 which has at its left-hand end in Fig. 2 an elongated slot 84 which engages a pin 85' at the outer swinging end of a crank 85 secured to the shaft 57 to which is also secured a toggle arm 86 which in the position shown is substantially upright and to the upper end of which is pivotally connected a second toggle arm 87 which is also shown substantially upright and is pivotally connected at its upper end to a sliding bar 89 which is slotted at its center at 90 to straddle a portion of the frame 1, whereby the said sliding bar 90 is guided to move in a vertical direction. Said sliding bar 90 has connected to its upper end a vertically reciprocating upright 74 previously discussed, which is connected to the vertically reciprocating upright 75 by cross-bars 75' forming a rigid frame to which the shelves 16, 16' etc. are pivotally connected at their rear ends by the said studs 18, 18' at each side, previously discussed.

The motion of the toggle 86 is response to spring 92 which is connected thereto after the manner of the spring 65 is limited by a stop 93 whereby the shelves move downwardly to and only to a horizontal position as the plunger 3 is advanced, the operation except for timing is precisely similar to that of the plunger 2 and shelves 7, a precisely horizontal position being non-essential as previously pointed out. There is an additional spring 94 connected to the arm 80 to cause the follower 78 to maintain continuously its contact with the cam 77.

In operation each carton in turn is placed in receiving relation to the load-forming area L, which contains the shelves 7, 7' and 7'' and the cans thereon, a funnel or can-funnel 95 of the usual construction being provided to conduct or guide each load of cans into the corresponding cartons 4 in Fig. 4. The machine is started by means of a hand lever best shown at 97 in Fig. 1. This lever is secured to the trip shaft 98 shown in said figure and also in Fig. 2 and in end view in Fig. 5, and in cross-section in Fig. 4. This shaft 98 which is rocked or turned in a counter-clockwise direction as seen in Figs. 4 and 5 by pulling toward the observer in Fig. 1, and referred to as operator-controlled tripping means, other tripping means being usable, carries a depending locking lever 99 secured thereto, Fig. 5, and provided with a projecting latch member 100 which engages a corresponding latch surface 101 shown as in the form of a notch in a disk 102 mounted on a shaft 103 which is parallel to the shaft 98 and carried in a suitable bearing in brackets 104 on the machine frame.

The disk 102 is engaged by a chain 105 which is wrapped about an upper quadrant of the disk 102 extending clockwise about the same as seen in Fig. 5 from a point 106 where it is secured. The free end of the chain 105 is drawn downwardly by a tension spring 107 which is secured at its lower end to the machine frame 1. When the member 97 is tripped by the operator as described, the latch 100 is released and the disk or gear 102 is rotated clockwise turning the shaft 103 in a similar direction thus operating a case-supporting arm 108 which is secured to a normally depending lever 109, mounted on said shaft 103 to rock therewith. The case-supporting arm 108 is shown as normally horizontal in what may be termed the releasing position which it takes when the machine is idle.

The operation thus described causes the arm 109 to swing upwardly to the horizontal position in which it is shown in broken lines in Fig. 4, whereby the case-supporting arm 108 swings to the vertical position which is also shown in said figure in broken lines. The arm 109 and the case-supporting arm 108 together are moved upwardly into engagement with the case 4 placed in the position shown in Fig. 4 by the operator but they may also be considered to form a case-supporting device which is positively advanced or locked by the rocking lever 40 which operates the main plunger 2 by which plunger the load of cans is moved into the case or carton from the load-forming area.

The case-supporting member is in the form of the invention shown further controlled at the end of the transfer of the cases into the cartons by and from this rocking lever 40 or other correspondingly moving member by way of connecting rod 110. This connecting rod is shown as provided with a collar 111 adjustably secured thereto and, as shown, thrust forwardly from said lever in the direction of its working stroke. The connecting rod 110 carries in telescoping relation thereto a tubular extension 112 to the end of which is secured an upwardly and forwardly extending arm 114 which is connected at its upper end by a link 96 to the arm 109 preferably near its center as at 115. This arm 114 and link 96 are shown as guided by a lever 116 which is pivotally mounted on the bracket 104 at one end and at the other end pivotally connected to the arm 114 and link 96 by wrist pin 117. The mechanism thus described while suitable and satisfactory is subject to a considerable degree of variation.

The function accomplished by the connection of the case-supporting means 108, 109 to and with

the rocking lever 40 is regarded as important in that it prevents displacement of the cases or cartons 4 in and particularly at the end of the filling operation when the load of cases is advanced into the carton, and particularly at and near the final end of said advancement.

The collar 111 is so placed on the connecting rod 110 that it contacts the ends of the tubular member 112 at the end of the forward stroke of the arm 109 and remains in contact therewith and throughout the dwell of said arm which is incident to the harmonic motion thereof resulting from the motion of the crank 48 as transformed to a reciprocating motion by the connecting rod 49. At this time there is a tendency to displacement of the cartons and such displacement in so far as it would be harmful is prevented not only at the end of the stroke as the plungers are approaching, but for a considerable period as the plunger members 11 are approaching the end of the stroke so that no harmful yielding of the cartons can take place as the load is forced back to its final position in the case 4 on the funnel 95.

Following the filling stroke, as the rocking lever 40 moves to the right in Fig. 4, the positive support thus applied to the carton-supporting members 108, 109 is released and the spring 107, Fig. 5, yielding to the weight of the filled carton permits the members 108, 109 to swing downwardly to the full line position in which they are shown in Fig. 4 thus causing the filled carton to rotate counter-clockwise and slide down this guide 109' onto the carton-conveyor shown at 118 in Fig. 4. This conveyor 118 is composed of ball-bearing rollers and is further inclined downwardly in the direction in which the cartons are to be delivered, whereby the weight of the filled carton or case causes it to slide or roll to the point of delivery. As such progress is incident to the free rotation of the rollers composing the conveyor 118, the arm 108 remains between the rollers of conveyor 118 being released by the passage of the carton from its lower broken line position 4' as shown in Fig. 4, in time for the next can-filling operation, pending which it remains in said position 4'.

The throw of the operating lever or trip lever 97 is limited by a stop 113', Fig. 1, to the desired arc and the said operating lever is automatically returned to its initial position by a spring 119, see Fig. 4, which is connected to the bracket 104 at one end and at the other end to a switch-tripping arm 120, see Fig. 4, to be further described, which arm is rigidly secured to the trip-shaft 98. The return of said shaft 98 to its initial position causes the reengagement, see Fig. 5, of the latch 99, 100, 101 prior to the removal of the case from the arm 108 as shown in the full line position Fig. 4, whereby the apparatus is made ready for the repetition of the operation thus described.

It is important to note the machine as shown while it lacks the one-revolution clutch which has been universally used in such machines, operates for a single stroke of the main plunger 2 each time it is tripped by the operator as above described.

In the form shown this is accomplished by a combination of electrical and mechanical means which will now be described.

The switch-tripping lever 120 is provided at its outer end with a tongue 122 shown in detail in Figs. 6 and 7. This tongue 122 is pivotally connected to the lower end of the switch-trip lever 120, the pivot being indicated by reference character 124 in Figs. 6 and 7, and this tongue 122 is thus made free to swing upwardly but the lever 120 and the tongue 122 are provided with co-operating stop surfaces indicated at 125 whereby the tongue resists any tendency to swing downwardly.

The lever 120 as it swings upwardly incident to the operation of the trip-shaft 98 by the hand-lever 97 engages a bell-crank lever 126 pivotally mounted on the frame at 127. This bell-crank lever 126 consists of a normally upright arm and a normally horizontal arm 128 at the top of said upright arm. The horizontal arm 128 extends to the right in Fig. 4 and has on its rearward end as to the direction of the working stroke of the plunger 2 an upwardly disposed point 129 which engages a notch 130 or other suitable device for this purpose in a trip-switch lever 131. This lever as shown, the entire mechanism being subject to change and variation within the scope of the invention, is connected by tension spring 132 to an intermediate point on the arm 128. This spring tends to hold point 129 in engagement with the notch 130. The normal position of these parts corresponding, however, to the stationary condition of the machine is illustrated in Fig. 16.

Lever 131 as shown is pivoted intermediately of its length on the frame 1 of the machine or to a suitable bracket thereon at 133 and is connected at its lower end or at a point below said pivot by means of a connecting rod 63 to the wiper 62 at the right previously described as engaging the lug 60 at the beginning of the forward or working stroke of the plunger 2. More properly the wiper 62 is engaged by the lug 60 whereby the circuit is broken at the switch 20 which is as hereinafter described controlled by the arm 128 of the bell-crank 126.

It is important to note that Fig. 4 illustrates the switch 20 and its actuating parts not in the inoperative condition of the machine, but in the position which these parts take at or near the beginning of each forward or working stroke of the plungers 2 and 3, the fact being that the hand-lever 97 at the period of operation shown has been moved forwardly through a sufficient arc to release the lock or latch 99, 100, 101 and to close the switch 20 and released and returned by spring 119 or manually returned to initial position. As the lever 97 was moved to the left or counter-clockwise in Fig. 4, the switch-operating arm 120 is swung counter-clockwise against the tension of the spring 119 and the tongue 122 is moved upwardly against the knob 135 or lever 126 or otherwise engaged with the bell-crank lever 126, whereby the arm 128 is swung downwardly and locked as to its point 129 in the notch 130. Thus the switch 20 is brought to the closed position shown in Fig. 4, the normal position of the point 129 in relation to the notch 130 being as shown in Fig. 16, in which the switch 20 is open, point 129 being free of notch 130. The hand-lever 97 is released so both this lever and tripping arm 120 swing clockwise in response to spring 119, the tongue 122 yields upwardly and passes downwardly over knob 135.

In operation the lever 97 having been tripped and released to bring the switch 20 to closed position and its actuating parts to the position Fig. 4, as the plunger 2 advances, the lug 60 carried thereon contacts the wiper 62 operating the bell-crank 61 in a clockwise direction whereby the connecting rod 63 is moved to the left in Fig. 4 or forwardly in the direction of the plunger stroke, rotating the lever 131 in a clockwise direction thus releasing the point 129 of the bell-crank 126 whereby the horizontal arm 128 is moved

upwardly as to its outer swinging end by the tension of spring 132, returning the arm 128 and point 129 and lever 131 to their normal positions which they maintain while the machine is quiescent, said normal position being shown in Fig. 16 in which switch 20 is open. It way be of interest that the switches used are of a type which close upon a very slight displacement, the moving member of the switch being indicated at 136. The switch 20 is in circuit with motor 44 which drives plungers 2 and 3 and operates shelves 7 and 16 so that in the absence of any other agency to close the circuit, the machine would stop.

The machine contains an important provision for preventing any possible advancement of the plunger prior to the lowering of the shelves 7, 7', 7'' and 16, 16' and 16'' toward their horizontal position in which they are out of the paths of the plunger members 11, 11' and 11'', and 70, 70' and 70''. As foresaid, the initial advancement of the plunger breaks the operating circuit, through motor 44, at switch 20, and continued operation of the machine depends upon the simultaneous or prior closing of this circuit through some different path. There is for this purpose a second switch 23 which in accordance with the circuit shown in Fig. 16 is connected in parallel with the switch 20 and this latter switch is operated by a depending lug or dog 137 shown as extending downwardly from the swinging end portion of the lower load forming shelf 7. This lug might be variously mounted to serve the purpose in hand. As already pointed out the shelves 7, 7' and 7'' as well as the cover-plate 7''' move downwardly due to the operation of spring 65 and slot 53 as soon as the plunger 2 begins its forward stroke and the shelves approach horizontal position whereby switch 23 is closed by the operation of the dog 137 as soon as the switch 20 is opened or prior to such opening. If by any chance as by failure of spring 65, the shelves 7 do not swing downwardly in time, the machine stops due to breaking of the circuit at switch 20 and failure to complete it through any other path.

In this connection it may be noted that the motor shaft, i. e. the shaft 45' on which the worm 45 is mounted, various portions of the machine being available for this purpose, is provided with a brake 138 which is applied by means of a spring 139, being released by the operation of a solenoid 141'' which is in circuit with the motor 44 whereby whenever the current is broken, the brake is applied and the machine stopped instantaneously overcoming any momentum which might cause the machine to continue to operate when both of the above described safety switches were opened, such undesired operation tending to cause destruction of the machine parts as by contact of the plunger members with the shelves.

Referring now to the operation of the secondary plunger 3, it is of importance to note that by virture of its quick short stroke which is completed during the advancement of the primary plunger or load-transfer plunger 2, or early in its return stroke, said plunger 3 moves every second half load of cans, indicated by reference character 16a at the right in Figs. 5 and 13, from the position in which it enters the magazine M in line with the feeding shelves 22, 22' and 22'', see Fig. 9, in the direction of the working stroke of both plungers, i. e. to the left in Fig. 5, to the position 16a' in said figure, a sufficient period in advance of the working stroke of the primary or load-transfer plunger to permit a second half load of cans to enter the position 16a, completely filling the magazine M in time to insure a complete load of cans in the magazine to enter the load-supporting area L and fill same prior to the advancement of the plunger 2, even provided the operator replaces the carton 96 on the funnel 95 as soon as the preceding carton is out of the way and at the same time moves the hand lever 97 to actuate the machine. Thus the machine operates at high speed being ready to repeat the filling operation almost, if not quite as fast as the operator can move lever 97.

In order to insure this normal operation and prevent the advancement of the secondary plunger or short-stroke plunger 3 in the absence of a full supply, i. e. in the present instance of a dozen cans in the position 16a, a third means for stopping the machine is provided.

The manner of filling the shelves 22, 22' and 22'' and keeping them full, has been described whereby the lower shelves are filled before the cans enter the upper shelves 22''. In order to insure a full supply of cans to the magazine whereby the latter holds a full load shown as 24 cans in the present instance, whenever the plunger 2 is withdrawn, it is provided that the upper feed shelf 22'', shall contain at least 4 cans or any predetermined number of cans immediately to the rear of the magazine, the election of a different number being optional at this time the lower shelves would be full in accordance with the operation of the elevator 26 as shown.

To this end the machine is provided with a yielding platform as shown in Figs. 2, 9 and 10, on which the third and fourth cans on the top shelf normally rest in the rear of the magazine. This platform 24 is located in an opening 140' in the top shelf 22'', which opening is a little longer than the platform 24, and this platform is supported on a yielding device comprising depending members 141 and 142 supported on corresponding horizontal members 141' and 142' suitably clamped at their ends in vertical uprights 144 at each side of the cover-plate 22''' which overlies the ways 22. These members 144 are secured to a transverse shaft 144' which extends across the machine transverse to said ways and said cover-plate 22''', being mounted in suitable bearings on the frame. This shaft 144' has secured to it and extending rearwardly as to the direction of feed, a substantially horizontal arm 143 which is yieldingly supported on a spring 145 which is shown as an upright helical spring enclosed in a suitable opening in the switch block 146. This spring is engaged by an adjustable depending pin 147 carried by lever 143, which pin is shown as provided with a stop 147' to prevent injury to the contact points of the switch to be described. The switch is referred to in a general way by reference character 25, Fig. 16, being provided with an upwardly extending actuating pin 149 which is engaged to close the switch by a depending adjustable member 148 carried by the lever arm 143 and shown in the form of a screw.

The switch 25 is in the circuit of the motor 44 which operates the plungers and shelves being adapted to open said circuit independently of switches 20 and 23. When the platform 24 carries two or a corresponding number of cans, depending on the arrangement of ways 22 and the election of the designer, as best shown in Figs. 2 and 10, the weight of said cans compresses the spring 145 and holds the switch 25 closed. Otherwise, i. e. if the supply of cans on the shelves is

insufficient to fill the magazine instantaneously, there would be less than two cans, or a sufficient number of cans, on the platform 44 to close switch 25. Under these circumstances the spring 145 will support the arm 143 in such a position that the switch 25 will remain open, whereby the motor 44 will be de-energized and the brake 33 will be applied stopping the machine, and the machine will not operate until a sufficient supply of cans is ready on the feed shelves 22, 22' and 22'' and the magazine M contains at least a half load of cans as illustrated in Fig. 13.

To provide for the operation of the elevator when motor 44 is idle, the purpose of which elevator is to fill the feeding shelves 22, 22' and 22'' with cans so that it must operate when the plungers are stationary, a separate motor 9' is provided for this purpose, the operation of which motor is not affected by the switch 25 just described, or by switches 20, 23.

Having reference to the sequence of operations particularly in relation to the stop motion switches, or protective devices 20, 23 and 25, it will be noted that, the machine being supplied with cans as illustrated in Fig. 13, the operator draws the hand-lever 97 at the left in Fig. 1, toward him, moving it counter-clockwise as shown in Fig. 4, i. e. in broken lines in said figure. The operator either immediately returns the lever to normal or releases it when it is returned by the spring 119.

The normal position of the actuating members 128, 129, 130, and 131 of switch 20 is shown in Fig. 16, the position in Fig. 4 being that which these parts take immediately after the tripping of the machine by lever 97. The lever 120 with its tongue-like end 122 being swung upwardly in Fig. 4 by the operation of hand-lever 97 engages with said end of tongue 122, the knob 135 swinging the bell-crank lever 126 clockwise and causing the horizontal arm 128 to close the switch 20. By this operation the point 129 of arm 128 is brought into the notch 130 of the arm 131 whereby the parts are locked in the position shown in Fig. 4. The circuit is thus closed starting the motor 9 which causes both plungers 2 and 3 to advance. The release and return of hand-lever 97 causes tongue 122 to swing downwardly past knob 135, in which movement it yields upwardly passing said knob, when it is straightened into alignment with arm 120 by gravity. Almost immediately the lug 60, Fig. 4, contacts the wiper 62 turning the bell-crank 61 clockwise, whereby the connecting rod 63 moves to the left imparting a clockwise swing to the lever 131, whereby the arm 128 is released and the switch 20 is permitted to be opened by the spring 20'. This tends to break the circuit and stop the machine and the machine would be stopped at this point of its operation unless the switch 23, which is in parallel with switch 20, be closed. The closure of the switch 23 is dependent on the position of shelves 7 which in the normal operation is moved downwardly by the action of spring 65 on the toggle 64, 66. This toggle is released by the action of slot 53 in the connecting rod 52, Fig. 4, as soon as the plunger 2 begins its stroke. The lowering of the shelves is completed almost instantaneously closing the switch 23 and maintaining the circuit without interruption provided the shelves are moved in accordance with the normal operation of the parts described. If the shelves 7 etc. do not for any reason move downwardly out of the path of can-contacting members 11 etc. of plunger 2, the machine is stopped by breaking of the circuit of motor 44 and the application of the brake which two occurrences are simultaneous.

The operation of the switch 25 which prevents the functioning of the machine in the absence of a sufficient supply of cans to maintain at all times a full load of cans in the magazine M has just been described.

It will be noted from Figs. 10 and 11 that the swinging ends of the shelves 7, 7' and 7'' and the cover-plate 7''' are partly supported by a spring 160, Figs. 10 and 11, secured at one end to the frame 1 and at its lower end, to the sliding block 67 which operates uprights 12 and 12' and is in turn operated by the toggle 64, 66. The members 161 and 162 in Fig. 11 are side-guides for the cans as they approach the delivery ends of the magazine shelves 16. The guide 161 is provided at the end of the cover-plate 16''' in case another tier of shelves be added to the machine and or to make the shelves and cover-plates interchangeable.

The swinging ends of the magazine shelves 16, 16', 16'' and the cover-plate 16''' are similarly supported by spring 164, the provision of these springs is regarded as helpful, though possibly not essential, a qualification which applies to various details of the machine and parts thereof which are described but not emphasized as of primary importance.

The brake 33 which stops the plungers and shelves whenever the plunger and shelf-actuating current is broken, has been fully described and is regarded as effecting an important contribution to the improved operation which results from the functioning of the new combinations and parts herein shown and described.

It is of importance to note that while the machine lacks anything in the nature of a single revolution clutch, it starts when tripped, due to the closing of switch 20 and stops after each complete stroke of the plunger 2, due to the opening of switch 23 when the shelves 7, 7', 7'' are raised to the initial inclined position as in Fig. 1, switch 20 having been previously opened and latched ready for tripping.

The timing of the plungers in relation to each other and of the shelves in relation to the plungers is illustrated in Figs. 13 and 14, which are diagrammatic plans showing the condition and location of the cans in the machine at two successive periods of operation. It will be noted that the load-supporting shelves 7 etc. are filled and that the magazine shelves 16 contain a single layer, or half load, of cans marked 16a which are at the side of the shelves 16 which is rearmost considered from the direction of the plunger stroke, and in line with the feeding ways 22 etc. which are filled with cans. As shown in Fig. 13 the machine is ready for operation, when the operator moves the hand-lever 97 as described and releases or returns the same, switches 20 and 23 and the actuating means therefor being prior to tripping of lever 97 in the condition shown in the Fig. 16, except that switch 25 is closed due to the presence of a sufficient supply of cans on the feeding shelves 22, particularly the shelf 22''. Tripping of lever 97 closes switch 20 as previously described. Immediately the plungers 2 and 3 start forwardly and at this time due to the functioning of the slots 53 and 84 in the corresponding connecting rods 52, 83 and the springs 65 and 92 and cooperating parts, the shelves 7, 7', 7'' in the load-forming area and the shelves 16, 16', 16'' and the cover-plates

7''' and 16''' are moved downwardly as to their rear ends toward horizontal position.

As the plunger 2 completes its forward stroke, transferring the load of cans from shelves 7, 7', 7'' to the carton 4, which is thus filled and starts its backward stroke, the carton-supporting members 108, 109 being deprived of the support of the rod 112 and cooperating parts due to the retraction of the arm 40 and plunger 2 which takes place immediately after the forward stroke, swings downwardly, due to its weight overcoming the tension of spring 107, to the full line position of said parts as in Fig. 4, placing the filled carton on the ways 118 composed of ball-bearing rollers as previously described. At this time the latch 99, 100, 101 becomes engaged holding the ports in said full line position. The ways 118 being inclined, the carton moves forwardly out of the path of the arm 108 which is thus made ready to swing upwardly into supporting relation to the next carton when lever 97 is next tripped.

During the forward stroke of the load-transfer or primary plunger 2, or at least considerably prior to the completion of its return stroke, the short-stroke or secondary plunger 3 is advanced and retracted, said latter stroke being sufficient only to move the half-load or layer of cans 16a forwardly in the direction of the plunger stroke from the full line position 16a to the broken line position 16a'. Due to the contour and timing of the cam 77, which advances and retracts the plunger 3, the said plunger completes its full stroke, i. e. it is advanced and withdrawn from the magazine area M and passes out of the magazine area before the return stroke of the plunger 2. The shelves 16 in the magazine are then raised to the inclined position in which they are shown in Figs. 1 and 2. As soon as shelves 16 are thus returned to normal, the space formerly occupied by cans 16a is filled from the ways 22 completing the load in the magazine. Thereafter the connecting rod 52, slot 53 and cooperating mechanisms cause the shelves 7, 7', and 7'' to be returned to their initial inclined position as in Fig. 1.

In this connection it is important to note, as already pointed out, that the normally inclined position of the shelves 7 in the load-forming area assist in the quick transfer of the load of cans from the magazine to their final position in the load-forming area so that successive operations may be performed as frequently as the operator can conveniently move the hand-lever 97, each new load of cans being advanced and ready in the path of the load-transfer plunger 2 as soon as the latter has reached the end of its return stroke and even prior thereto.

It is of interest to note that in the depressed position of the shelves 7, 7', 7'' and the cover-plate 7''' these members act as can-stops to prevent the advancement of the cans from the magazine area M and to provide a clearance between the cans in the magazine and the cans forming the load, the ends of the shelves 7 etc. at the right as seen in Fig. 1 contacting the forward portions of circumferences of the forward cans in the magazine. Further the rearmost cans in the load-forming area as indicated at X in Fig. 1 are moved downwardly to a position in which their greatest horizontal diameter comes opposite the upper and lower zones, i. e. the converging surfaces of the two adjacent cans in the magazine whereby the clearance is increased. Also the depending stop members 10 of each shelf 7 swing to the left or clockwise as the shelves move downwardly providing ample clearance on this side, i. e. the forward side, of the load so that the loads of cans move freely into the cartons without friction either with the cans on the magazine or with these stop members 10.

The main object of the invention and the result that is believed to be obtained is an increase in the speed of operation in response to tripping by the operator, and in this connection the downward and forward inclination of the shelves in the load-forming mechanism, increasing the speed of advancement of the cans into the final position of the load prior to the advancement of the plunger 2, is of great assistance. The satisfactory clearance of these loads and the various stops provided, are also believed to contribute to the speed of operation, particularly over a long period. The stoppage and breakage of the machine thus avoided must be considered in connection with the long-term accomplishment of the machine.

It is of primary importance that during each stroke of the main plunger, the load is not only advanced into the carton, but a complete new load of cans formed in the magazine is placed in the path of the transfer plunger during its withdrawal and/or prior to its advancement, and at the same time the filled carton is dropped onto the ways, the machine being ready for a second stroke as soon as the first stroke is completed and practically as soon as the operator can trip the machine.

Also there is but a single stroke of both plungers to each load, i. e. for the transfer of each load to its carton whereby loss of time and unnecessary consumption of power are avoided.

The increased speed and dependability of operation serve to increase not only the output of the machine, but the output of each operator and the output per unit of floor space, whereby the cost of the product is notably reduced.

Having thus described a machine, embodying the features of the invention in what is now regarded as the preferred form, it should be understood that numerous changes of form and arrangement which would be obvious to a designer familiar with this machine are contemplated. I claim as new and desire to secure by Letters Patent:

1. The combination in a machine for filling cases with cans, of load-supporting shelves normally inclined forwardly and downwardly and pivotally mounted at their forward ends in a load-supporting space to swing toward horizontal position; magazine shelves normally inclined downwardly toward the upper ends of the load-forming shelves and similarly pivoted; a load-transfer plunger mounted to reciprocate on a path extending through the load-supporting space and having can-engaging members arranged in correspondence with the lower position of said shelves; a magazine plunger similarly mounted in relation to the magazine area, and having can-engaging members similarly arranged; means for reciprocating the transfer plunger and the magazine plunger to advance and retract the same, including means for advancing and retracting the magazine plunger by a stroke of less advancement than that of the transfer plunger, completing its withdrawal from the magazine prior to the withdrawal of the transfer plunger from the load-supporting space; and additional means for lowering the rear ends of both sets of shelves placing said shelves in said lower position prior to the en-

trance of the respective plungers into the load-forming space and the magazine space respectively, and for raising the rear ends of the respective sets of shelves returning them to said inclined position after the withdrawal of the respective plungers from the load-supporting space and magazine.

2. The combination in a machine for filling cases with cans, of load-supporting shelves normally inclined forwardly and downwardly and pivotally mounted at their forward ends in a load-supporting space to swing toward horizontal position; magazine shelves normally inclined downwardly toward the upper ends of the load-forming shelves and similarly pivoted; a load-transfer plunger mounted to reciprocate on a path extending through the load-supporting space and having can-engaging members arranged in correspondence with the lower position of said shelves; a magazine plunger similarly mounted in relation to the magazine area, and having can-engaging members similarly arranged; means for reciprocating the transfer plunger and the magazine plunger to advance and retract the same, including means for advancing and retracting the magazine plunger by a stroke of less advancement than that of the transfer plunger, completing its withdrawal from the magazine prior to the withdrawal of the transfer plunger from the load-supporting space; and additional means for lowering the rear ends of both sets of shelves placing said shelves in said lower position prior to the entrance of the respective plungers into the load-forming space and the magazine space respectively, and for raising the rear ends of the respective sets of shelves returning them to said inclined position after the withdrawal of the respective plungers from the load-supporting space and magazine, the load-supporting space and shelves and the magazine being of corresponding width and adapted to contain equal loads; and means for feeding to the magazine successive half loads of cans, the stroke of the magazine plunger extending into the magazine by a distance corresponding to the width of the said half load of cans fed to the magazine whereby the operation of the magazine plunger serves to displace alternate half loads of cans as fed to the magazine, from the path of the feed, and the advancement by the feed of the remaining half loads serves to complete successive loads therein, ready to be advanced to the load-supporting shelves.

3. The machine of claim 1 having operator-controlled tripping means; an electric motor for operating the plungers; a switch controlled by said tripping means to close said switch to actuate the motor for the initial advancement of the plungers, prior to their entrance into the spaces occupied by the shelves; means for opening said switch as the plungers approach the shelves; a second switch controlling the motor circuit and controlled by the shelf motion, to be closed by the downward motion of the shelves in time with the opening of the first mentioned switch.

4. The machine of claim 1 having operator-controlled tripping means; an electrically operated means for moving the plungers and shelves as aforesaid; a switch for starting said operating means connected to and closed by said tripping means, and connecting means whereby said switch is controlled by the plunger motion to open said switch as the plungers advance and before they reach the shelves; a second switch connected to and controlled by the shelf motion to close the circuit and continue the operation of the machine as the shelves move out of the path of the plungers; a third switch controlling said circuit; means whereby said third switch is held normally open; and means in the path of the cans approaching the magazine whereby the cans in said path close said switch to maintain the machine in operation; the third switch being opened by said normal opening means in the absence of a sufficient number of cans in said path to provide successive complete loads in the magazine whereby the operation of the plungers, in the absence of a sufficient supply of cans is prevented.

5. The machine of claim 1 in which the rearward end of the shelves in the load-supporting space and in the magazine engage in their horizontal position the forward portions of the surfaces of the forward cans being fed to said area and to the magazine respectively, thus serving as can-stops.

6. A machine for filling cases with cans, having load-forming shelves pivoted at their forward ends to swing downwardly from a normally inclined toward a horizontal position and a reciprocating plunger with can-engaging members adapted to reciprocate between said shelves in their lower position; an electric drive for the plunger; a switch controlling said electric drive; means connected to said shelves to engage said switch and close the circuit as the shelves move downwardly; and other means controlled by the plunger to open the circuit tending to stop the machine as the plunger approaches the shelves, whereby the normal operation of the machine is continuous throughout each plunger stroke and the machine is stopped when the shelves fail to leave the plunger path as the plunger advances.

7. In a case-filling machine for cans and the like, of the type having a load-supporting space and a load-transfer plunger mounted to reciprocate therethrough; and shelves in said space for supporting the cans forming the load; a magazine of approximately the same size as and to one side of the load-supporting space and having shelves inclined toward the load supporting space shelves adapted to feed cans to the shelves in said space by the cans rolling from the magazine to said space, ways for feeding the cans to the magazine and a second plunger for transferring cans crosswise on the magazine shelves fed by said ways, the feeding ways and second plunger forming in the magazine a full load for said load-supporting space, both the plunger paths being transverse to the direction of the advancement of the cans by rolling, and the magazine and load-supporting space being of an effective width which is a multiple of the effective feeding way width.

8. A case-filling machine for cans and the like, of the type having a load-supporting space and a load-transfer plunger mounted to reciprocate through said space; and shelves in said space for supporting the cans forming the load; a magazine of approximately the same size as said space, having corresponding shelves for feeding the cans to the load-forming shelves by rolling, all said shelves being inclined downwardly in the direction of said rolling; a plunger for forming the loads in the magazine, both plungers having can-engaging members which pass between the shelves, the plunger paths being transverse to the direction of the advancement of the cans by rolling, the shelves being pivotally mounted at their

forward ends; means for operating the plungers whereby the magazine plunger substantially completes a relatively short forward and return stroke while the transfer plunger is advancing; and additional means for swinging the rear ends of the respective shelves downwardly tending to bring the shelves to horizontal position in the early portion of the advancement of the corresponding plungers and for returning them to the normal inclined position by raising said ends when corresponding plunger is withdrawn.

9. In a case-filling machine having a reciprocating load-transfer plunger; load-supporting shelves located in a load-supporting space for supporting cans in the path of the plunger; means for feeding cans to said space by rolling, said shelves being inclined downwardly in the direction of feed; means pivotally supporting the forward ends of said shelves and means for moving the rearward end of each shelf downwardly toward horizontal position as the plunger advances, said machine having means timed with the shelf motion and plunger and controlled thereby for stopping the machine prior to the advancement of the plunger into the space occupied by the shelves in the event of the failure of the shelves to move downwardly substantially to said horizontal position prior to entrance of the plunger into the space occupied by the shelves.

10. In a case-filling machine having a reciprocating load-transfer plunger; load-supporting shelves located in a load-supporting space for supporting cans in the path of the plunger; means for feeding cans to said space by rolling, said shelves being inclined downwardly in the direction of feed; means pivotally supporting the forward ends of said shelves and means for moving the rearward end of each shelf downwardly toward horizontal position as the plunger advances, said machine having an electric circuit for controlling the operation of the plunger and shelves and operator-controlled tripping means for starting the machine; a switch in said circuit operatively connected to and controlled by the tripping means to place the machine in operation; and means operated in time with the advancement of the plunger to open the circuit and stop the machine, prior to the entrance of the plunger into said space; a second switch in said circuit having actuating means operatively connected to the shelves to close the circuit and continue the operation of the machine when the shelves move downwardly substantially to horizontal position.

11. In a case-filling machine having a reciprocating load-transfer plunger; load-supporting shelves located in a load-supporting space for supporting cans in the path of the plunger; means for feeding cans to said space by rolling, said shelves being inclined downwardly in the direction of feed; means pivotally supporting the forward ends of said shelves and means for moving the rearward end of each shelf downwardly toward horizontal position as the plunger advances, said machine having an electric circuit including a motor to operate the plunger and shelves; a switch timed with the shelves and plunger to open the circuit to prevent advancement of the plunger into the load-forming space prior to the movement of the shelves to said approximately horizontal position; means connected to and operated in time with the shelves to close said switch to cause the operation of the machine when the shelves move downwardly toward said horizontal position; braking means for stopping the plunger; means imparting a constant tendency to the brake to apply the same; and means in the circuit for holding the brake released when said circuit is closed whereby the brake is applied instantaneously when the circuit is broken.

12. In a case-filling machine having a reciprocating load-transfer plunger; load-supporting shelves located in a load supporting space for supporting cans in the path of the plunger; means for feeding cans to said space by rolling, said shelves being inclined downwardly in the direction of feed; means pivotally supporting the forward ends of said shelves and means for moving the rearward end of each shelf downwardly toward horizontal position as the plunger advances, said machine having an electric circuit for operating the plunger and shelves and having operator-controlled tripping means; a switch in said circuit operatively connected to and controlled by the tripping means to operate the machine; and means operated in time with the advancement of the plunger to open said switch and stop the machine prior to the entrance of the plunger into the load-supporting space; a second switch in said circuit adapted to complete the circuit when the first said switch is open, said second switch having actuating means operatively connected to the shelves to close the circuit and continue the operation of the machine when the shelves move downwardly toward horizontal position; braking means for stopping the plunger; means whereby the brake is applied when the circuit is opened; feeding means comprising means whereby the cans at different periods in the feeding operation follow different paths; a third switch in said circuit and means for operating said latter switch, said means being in the path of the cans moving into the load as the load approaches completion for operating said latter switch to break said circuit to stop the plunger in the absence of a sufficient supply of cans in said path.

13. In a case-filling machine having a reciprocating load-transfer plunger; load-supporting shelves located in a load-supporting space for supporting cans in the path of the plunger; means for feeding cans to said space by rolling, said shelves being inclined downwardly in the direction of feed; means pivotally supporting the forward ends of said shelves and means for moving the rearward end of each shelf downwardly toward horizontal position as the plunger advances, said machine having a magazine space located to the rear of the load-supporting space and having shelves which correspond to the shleves in the load-supporting space and are downwardly and forwardly inclined into delivery relation with said respective load-supporting shelves, said magazine shelves being pivoted at their forward ends; and means for feeding cans to one side of the magazine shelves to occupy one-half of the magazine which is rearmost as to the direction of the working stroke of said plunger; a magazine plunger cooperating with the magazine shelves to form the load by advancing alternate half loads of cans fed to the magazine to a position out of line with the feed whereby the remaining half loads of cans entering the magazine serve to complete successive full loads therein; means for operating the magazine plunger to advance and retract the same prior to the withdrawal of the load transfer plunger; means for lowering the rear ends of the magazine shelves to bring the shelves to a substantially horizontal position, at the beginning, and raising them to the initial inclined position, at the end, of the stroke of the magazine plunger.

14. In a machine of the type having a load-transferring plunger and load-supporting space with shelves therein for supporting successive loads of cans in the path of the plunger and a magazine to one side of said space having shelves leading in rolling feeding relation to the shelves in the load-supporting space and adapted to support the full load of cans for said space; a load-forming plunger in the path of which the magazine shelves support alternate half loads of cans and feeding means for leading the cans to the position of said half loads in the magazine; means for operating the load-transferring plunger; means operating in timed relation with the load-transferring plunger for advancing the magazine plunger through the area of the magazine occupied by said half loads and retracting it approximately within the period of the forward stroke of the load-transfer plunger, advancing alternate half loads from the path of the feed and permitting the remaining half loads to advance and complete successive loads in the magazine to be fed, each load in turn to the load supporting shelves.

15. The machine of claim 14 having operator-controlled tripping means, the plunger actuating means including an electric circuit whereby the operation of said plungers is controlled; switch means in said circuit for closing and opening the circuit to start and stop the plungers; means connected to said tripping means whereby said switch means is closed to start the machine, and means timed with the operation of the plungers for opening said switch means to stop the machine after each complete stroke of the load-transfer plunger, whereby the machine operates through the period of a single stroke of the load-transfer plunger each time it is tripped by the operator.

16. The machine of claim 14 in which there is an electric circuit for operating the plungers, and the shelves in the load-supporting area and in the magazine are arranged one over the other, and in which there are corresponding feeding shelves likewise arranged at the rear side of the magazine in the direction of the plunger motion, and in which there is means for supplying cans to the feeding shelves whereby the lower feeding shelf is first filled with cans, the next shelf above being thereafter filled, the upper shelf being filled after all of those below; detector means in the path of the cans on the top shelf, a switch in said circuit controlled by said detector and normally open to be closed by cans on said shelf whereby the plungers are stopped in the absence of a supply of cans sufficient to assure a full load of cans in the magazine and in the load-supporting space.

17. The machine of claim 14 having an electric circuit for operating the plungers, the shelves in the load-supporting space being arranged in tiers one above the other and the corresponding shelves in the magazine being likewise arranged; and means for feeding cans to all of the shelves in the magazine; detector means in the path of the cans and a switch controlled by the detector means for breaking said circuit to stop the plungers in the absence of a supply of cans sufficient to fill both the load-supporting space and the magazine.

18. The machine of claim 14 having an electric motor to operate the plungers, a circuit for energizing said motor, switch means in said circuit, operator-controlled means for tripping the machine; means connected to said trip means and to said switch means for closing the circuit to start the operation of the machine; means timed with the plunger operation to stop the machine upon the completion of the stroke of the load-transfer plunger by operation of said switch means; a brake and means tending to hold the same applied for stopping the plungers; and means energized by said circuit for releasing said brake whereby the brake is applied and the plungers are stopped instantaneously on the opening of said circuit.

19. The machine of claim 14 having an electric motor to operate the plungers, a circuit for energizing said motor, switch means in said circuit, operator-controlled means for tripping the machine; means connected to said trip means and to said switch means for closing the circuit to start the operation of the machine; means timed with the plunger operation to stop the machine upon the completion of the stroke of the load-transfer plunger by operation of said switch means, a brake and means tending to hold the same applied for stopping the plungers; and means energized by said circuit for releasing said brake whereby the brake is applied and the plungers are stopped instantaneously on the opening of said circuit; means for feeding cans to the magazine at the side of the frame which is rearmost in the direction of the advancement of the plungers; a switch in said circuit and a detector in the path of the feed connected to and operating said switch to open the circuit and stop the machine in the absence of a supply of cans sufficient to fill the magazine.

20. A case loading machine comprising means including superimposed ways to hold a full load of cans for a case, forming a loading space, means including superimposed inclined ways to one side of said loading space and from which the cans roll on said inclined ways to the ways of the loading space, forming a magazine holding a full load of cans for said space, means to one side of said magazine to roll cans thereinto to form one-half a load for the case and means to move the cans forming said one-half load cross-wise of the magazine and lengthwise of the cans, crosswise of the means rolling cans to said magazine.

21. A case loading machine comprising means including superimposed ways to hold a full load of cans for a case, forming a loading space, means including superimposed inclined ways to one side of said loading space and from which the cans roll on said inclined ways to the ways of the loading space, forming a magazine holding a full load of cans for said space, means to one side of said magazine to roll cans thereinto to form one-half a load for the case and means to move the cans forming said one-half load cross-wise of the magazine and lengthwise of the cans, crosswise of the means rolling cans to said magazine, means to interrupt the rolling of cans from said can rolling means during said cross-wise movement of said half load and to permit the resumption of the rolling of cans to the magazine after said cross-wise movement, whereby said magazine is filled with a full load.

22. A case loading machine comprising means including superimposed ways to hold a full load of cans for a case, forming a loading space, means including superimposed inclined ways to one side of said loading space and from which the cans roll on said inclined ways to the ways of the loading space, forming a magazine holding a full load of cans for said space, means to one side of said magazine to roll cans thereinto to form one-half a load for the case and means to move the cans

forming said one-half load cross-wise of the magazine and lengthwise of the cans, crosswise of the means rolling cans to said magazine, means to interrupt the rolling of cans from said can rolling means during said cross-wise movement of said half load and to permit the resumption of the rolling of cans to the magazine after said cross-wise movement, whereby said magazine is filled with a full load, means to release the full load of cans from the magazine, whereby they roll to the loading space, and means thereafter to eject said full load of cans from the loading space.

CLIFFORD H. NEER.

REFERENCES CITED

The following references are of record in the file of this patent:

UNITED STATES PATENTS

Number	Name	Date
2,013,408	Hills et al.	Sept. 3, 1935
2,020,552	Hills	Nov. 12, 1935
2,043,411	Kimball	June 9, 1935
2,124,962	Ferguson et al.	July 26, 1938
2,312,060	Kimball	Feb. 23, 1943