Sept. 13, 1938. H. E. PAGE 2,129,866

TYPEWRITER MECHANISM

Filed Oct. 8, 1936 3 Sheets-Sheet 1

Fig. 1.

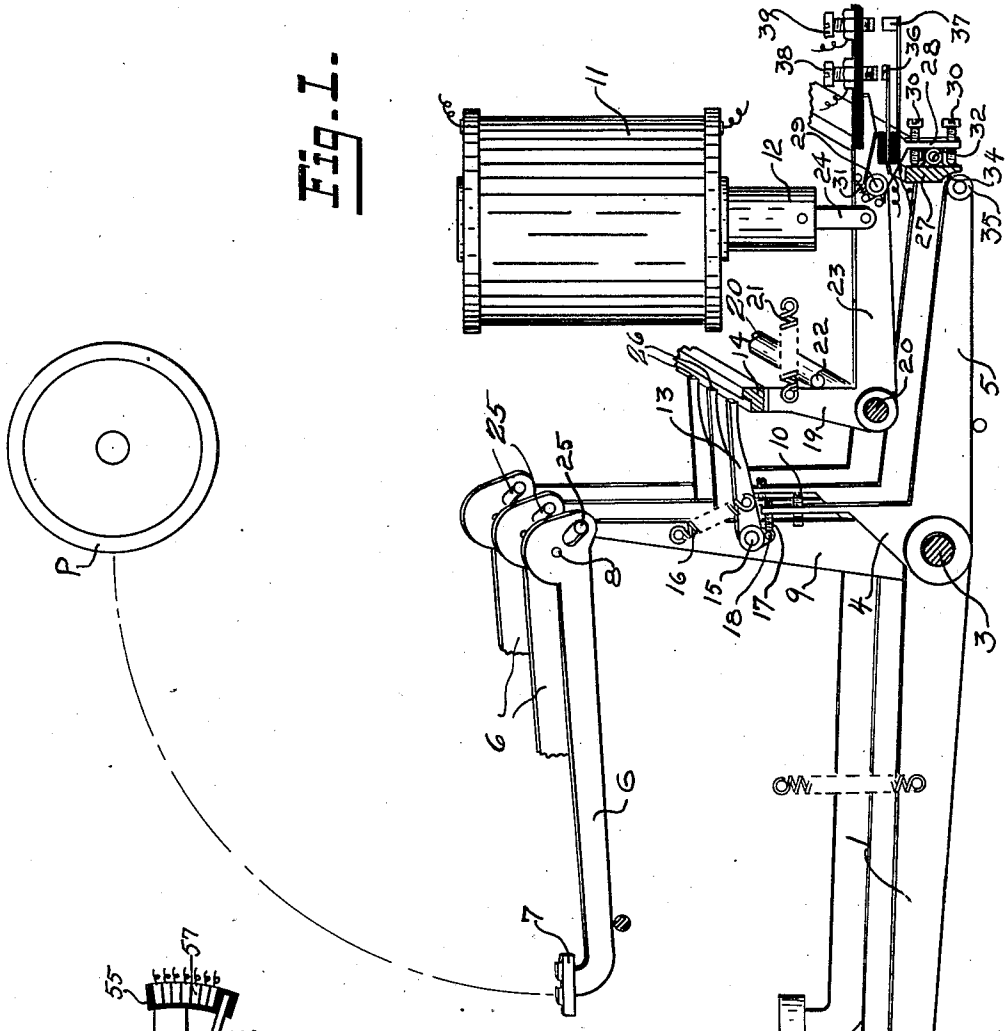

Fig. 2.

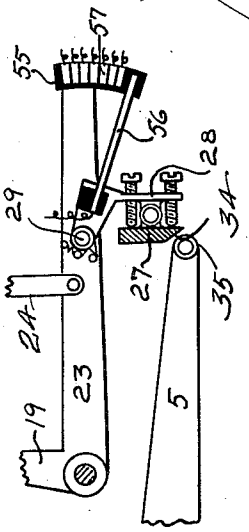

INVENTOR.

BY

ATTORNEY.

Sept. 13, 1938. H. E. PAGE 2,129,866

TYPEWRITER MECHANISM

Filed Oct. 8, 1936 3 Sheets-Sheet 2

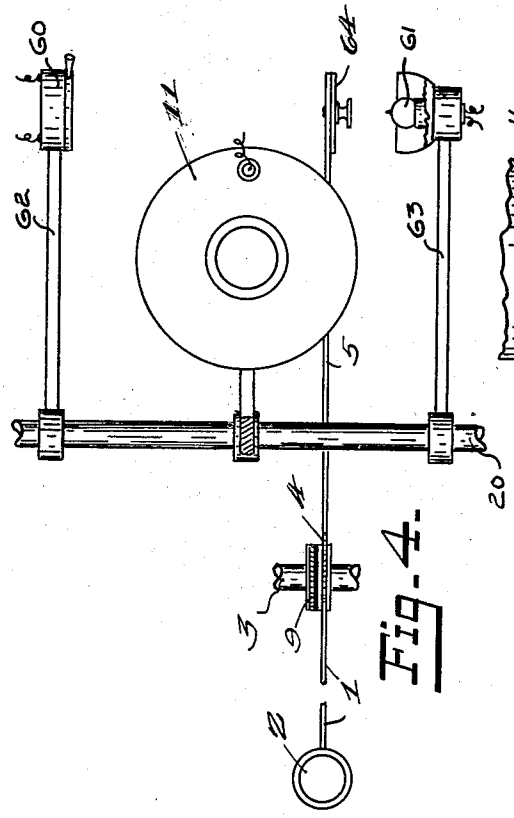

Fig. 4.

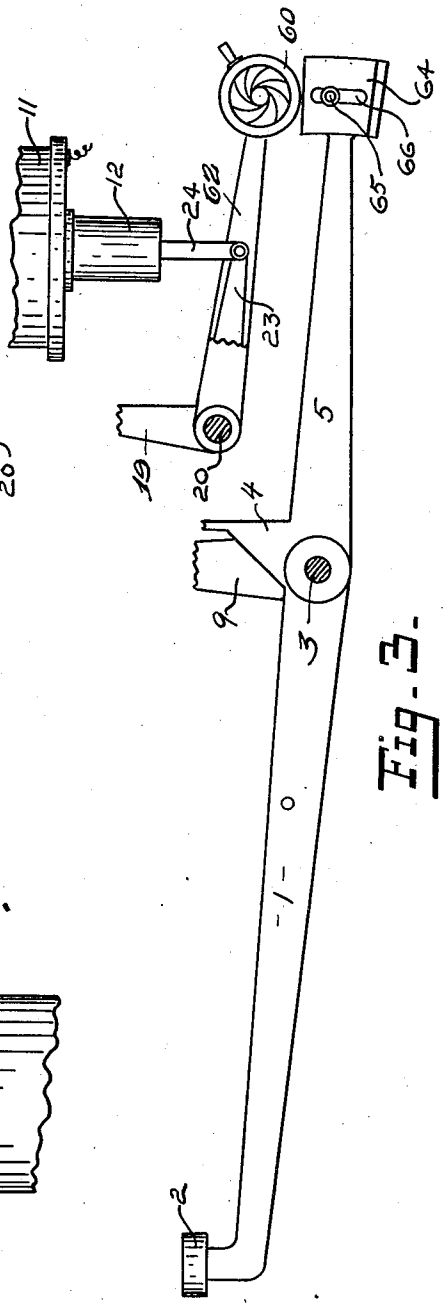

Fig. 3.

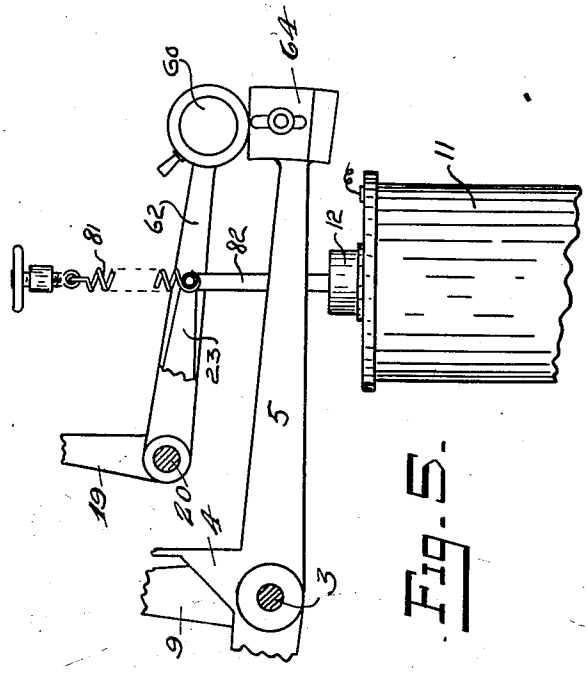

Fig. 5.

INVENTOR.

BY H. E. Page

ATTORNEY.

Sept. 13, 1938. H. E. PAGE 2,129,866

TYPEWRITER MECHANISM

Filed Oct. 8, 1936 3 Sheets-Sheet 3

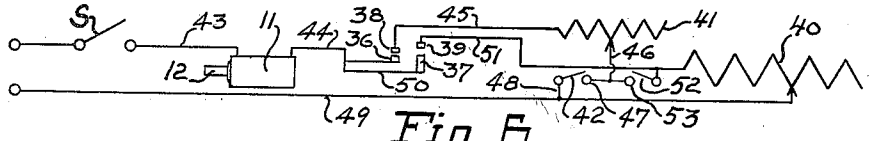

Fig 6



Fig. 7.

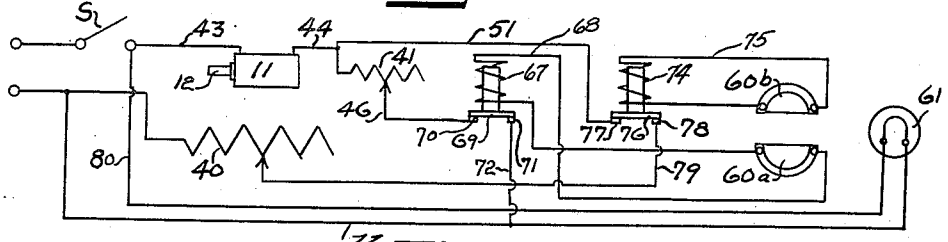

Fig. 8.

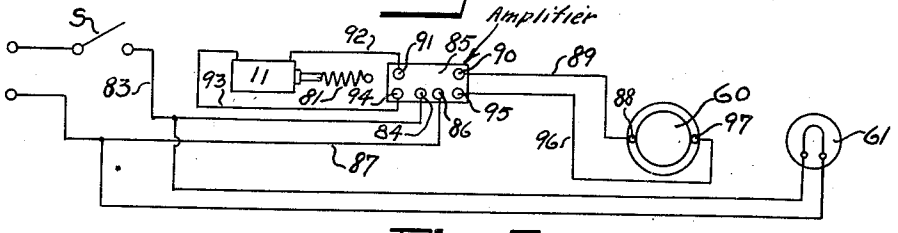

Fig. 9.

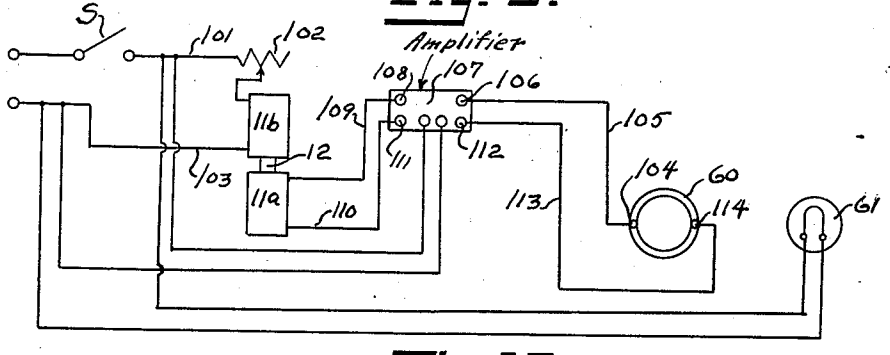

Fig. 10.

INVENTOR.

BY H. E. Page

ATTORNEY.

Patented Sept. 13, 1938 2,129,866

UNITED STATES PATENT OFFICE

2,129,866

TYPEWRITER MECHANISM

Herbert E. Page, Syracuse, N. Y.

Application October 8, 1936, Serial No. 104,671

18 Claims. (Cl. 197—14)

This invention relates to typewriting machines or mechanisms for typewriting machines, and has for its general object a particularly simple power operated typewriter mechanism which requires substantially the same technique on the part of the operator and has the same "feel" as a manual machine.

Typewriting is essentially a manual operation involving use of all the fingers. However, the strength of the various fingers varies, and also there is a tendency for some of the fingers to move in unison. The variations cause changes in striking pressure or impact on the typewriter roll and cause ununiformity in the writing or cause some letters to appear stronger than others. The power typewriters heretofore used take away from the operator any "feel" to control over the amount of impact, so that when a key is depressed, the type head strikes the paper on the roll, and an impression is made at some point during the downward movement of the key. This operation produces an even writing, but also it takes away from the operator, the "feel" to which she has become accustomed in writing. Furthermore, delicate operations, such as corrections in the middle of a sentence already written, where it is necessary to locate two or more letters in a space formerly occupied by one, and any other somewhat intricate manipulations of the type requiring practice and skill are impossible, if the operator has no control over the operation of the type bar other than having the type bar suddenly strike the paper with the impact given it by the power.

It also has for its object a power typewriter in which the type bars can be operated directly from the key lever, as an ordinary manual typewriter, or with any amount of power applied by the motor, from zero to maximum, to supplement the force applied by the operator, so that an operator used to using a manual machine can quickly become accustomed to the power machine by first starting in with zero or little power and gradually increasing it, until she adapts herself to the machine or adapts the machine to herself or to her technique, speed, proficiency and mental reaction.

It also has for its object a power typewriter mechanism in which the keys or key levers have a predetermined dip in order to energize the motor and in which the motor may be de-energized in the event the operator does not give the key the predetermined dip, or a mechanism in which the key operated mechanism has a follow-up movement relatively to the motor or the motion transmitting connections operated thereby, as the key is being depressed a predetermined amount or dip, so that if the key is not given the predetermined dip, or the pressure of the finger on the key is discontinued before completion of the dip, the follow-up movement does not take place, and the motor, which is being energized by the dipping of the key, will be de-energized before the type head strikes, all whereby the power operated typewriter has something of the same "feel" and operation as the manual typewriter.

It further has for its object a typewriter mechanism embodying a normally idle motor or motor means, preferably an electro-responsive motor, as a magnet or solenoid, which is controlled in its operation by the depression of the key levers and which actuates the selected type bar through motion transmitting means including a universal bar actuated by the motor, when energized, and coupling members individual to each of the type bars or key levers and operable by the key levers into coupling relation to the universal bar; and it further has for its object progressively operated relays or switch means controlled in their progressive operation by depression of the key levers, the first operated switch or relay being operated by the touch depression of the key lever and serving to close the circuit that partly energizes the motor and usually insufficiently to actuate the key bar through the motion transmitting connections, and the second switch or relay operating to close the circuit which supplies the motor with a stronger current sufficiently to actuate the motor with more force, and hence actuate the selected type bar through the motion transmitting connections.

The circuit closed by the second relay includes a variable resistance which may be set from zero to maximum to energize the motor various degrees to apply various degrees of force to the selected type bar.

The purpose of the successively operated switches or relays, one of which is operated by a light touch depression of the key levers to partially energize the motor to initially delay the actuation of the type bar, is to give the operator a chance to remove a finger or fingers from keys that are inadvertently partially depressed. For instance, the operator in striking an intended key with one finger may inadvertently touch a key with one of the other fingers. She instantly knows of this occurrence, and the momentarily delaying action gives the operator's mental action of withdrawing the unintended finger, time to re-

act in the fingers and release the key not intended to be depressed before the force of the motor is applied to actuate any key lever. Hence, when an operator unintentionally touches two keys, there is a chance, before the motor operates, to release one of the keys, instead of actuating or piling two or more keys. Also, if the operator touches the wrong key slightly and is cognizant of that fact before she has finally depressed the wrong key, she can withdraw her finger, as in manual machines, before the motor is fully energized.

Four different modifications of relays are shown for effecting this result. All forms of relays are controlled by the depression of the key lever.

In my typewriter mechanism, all the functions that can be performed by the typist on the ordinary typewriter can be performed on the power typewriter, as the impact given to the key can be controlled from zero to maximum, and also the location at which a correction is to be made can be determined, the same as in a manual typewriter, before the impact is given, either manually or by power. Also, in case of break-down, in either the electrical or power supply, or any of the power mechanism, my typewriter can be operated as a manual typewriter. Also, in my typewriter mechanism, the operator or typist has at all times the "feel" of the impact or force which she instantly can vary to suit her desire, and also the typist can operate the machine at will, as an ordinary, or as a power machine. Also, the power can be varied through graduated stages to suit the technique and skill of the operator.

The invention consists in the novel features and in the combinations and constructions hereinafter set forth and claimed.

In describing this invention, reference is had to the accompanying drawings in which like characters designate corresponding parts in all the views.

Figure 1 is a fragmentary isometric view, partly in section, of a typewriter embodying my invention.

Figure 2 is a fragmentary view of a modified form of key lever operated motor control and follow-up means shown in Figure 1.

Figure 3 is a fragmentary view similar to parts seen in Figure 1 showing a different form of key lever operated motor control mechanism for effecting the progressive energization of the motor.

Figure 4 is a view similar to Figure 2 with the form of key lever operated motor control mechanism shown in Figure 4.

Figure 5 is a fragmentary view similar to Figure 4 of a modification of the motor control mechanism shown in Figure 4.

Figures 6, 7, 8 and 9 are diagrammatic views of the motor control mechanism shown in Figures 1, 3, 5 and 6.

Figure 10 is a diagrammatic view showing the motor consisting of a pair of balanced solenoids instead of a single solenoid shown in Figure 1 and the key lever operated motor control therefor.

This typewriter mechanism comprises, generally, a plurality of key levers and type bars corresponding thereto, a motor, and preferably a normally idle electro-responsive motor, as a magnet or solenoid, motion transmitting connections between the motor or the movable member thereof and the type bars including members operated by the key levers respectively, and motor control means operated by the depression of the key levers to cause the selected type bar to be actuated by the motor, through the motion transmitting connections, an amount corresponding to the amount of depression or dip given the key lever, so that if the key lever is not depressed its full amount or a predetermined dip, the motor will be de-energized, or so that when the motor is energized by the partial depression of a key lever, the key lever must be further depressed to follow up the movement of the motion transmitting connections actuated by the motor, all whereby the force to actuate the type bar is applied from the motor but is controlled by the follow-up movement of the key lever. It also preferably comprises means whereby the initial touch depression of the key levers causes the motor to be partly energized insufficiently to actuate the type bar and to be further energized sufficiently to actuate the selected type bar upon further depression of the key lever.

I have here shown a conventional type of key bar or lever and type bar mechanism.

1 designates the key bars or levers, each having a key 2 at its front end and pivotally mounted on a shaft 3 which is common to all the key levers. Each key lever has an upwardly extending angular arm 4 and a rearwardly extending arm 5.

6 designates the type bars having type heads 7, the type bars being pivoted at 8.

9 is a lever arm rotatably or loosely mounted on the shaft 3 and extending upwardly radially relatively to the shaft 3 and connected to the key lever 1 through a lost-motion-connection to be described, to be actuated thereby. It is actuated from the key lever through the arm 4, which has a shoulder, as an adjustable set screw 10, for abutting against the lever arm 9 and actuating it, when the arm 4 has been actuated a short predetermined distance by the key lever. This constitutes the lost-motion-connection between the key lever and the type bar, whereby the type bar actuates the key lever in the usual way, when no power is used, so that the typewriter may be operated as an ordinary manual typewriter. The small lost motion between the set screw 10 and the lever 9 is for a purpose hereinafter explained, when the typewriter is being used as a power machine.

11 designates the motor, this being preferably a normally idle or de-energized motor, in contradistinction to a constantly running motor. It is here shown as a solenoid, the core 12 of which is a movable member and actuates the type bar through motion transmitting connections. These motion transmitting connections include coupling members 13 individual to the key levers 1 and the corresponding type bars 6, one coupling member for each key lever or type bar, and a universal member, or what for the sake of brevity and convenience in the specification and claims is called a universal bar 14, common to all the coupling members and connected to the movable member or core 12 of the solenoid to be actuated thereby. Each coupling member 13 is here shown as carried by the arm 9 of each key and type bar mechanism, and as pivoted at 15 thereto, and normally held out of position to be engaged by the universal bar 14 by a spring 16. These coupling members 13 are actuated by the arms 4 of the key levers 1. Each arm 4 is provided with a second adjustable shoulder or abutment 17 similar to the abutment or shoulder 10, the abutment 17 thrusting against an angular arm 18 on each coupling member 13. When the key lever 1 is depressed, the arm 4 moving therewith will tilt the corresponding coupling member 13 downwardly against the spring 16 into position to be en-

gaged by the universal bar 14, when the solenoid 11 is energized. In the event the solenoid is not energized or the machine is being used as a manual machine, the shoulder or abutment 10 will have taken up the lost motion between it and the lever arm 9 and will actuate the corresponding type bar 6. The lost motion is for the purpose of permitting the coupling member 13 to be moved into operative relation to the type bar 14, when the machine is being used as a power machine. The universal bar 14 is here shown as carried by crank arms 19 on a shaft 20 suitably supported in the frame of the machine, these crank arms extending upwardly so that the universal bar moves in practically a horizontal plane. The movement of the universal bar 14 is against the action of a retracting spring 21 which normally holds the universal bar or the arms 19 against a stop or stops 22 on the frame of the machine. The shaft 20 or one of the crank arms 19 is provided with a rearwardly extending lever arm 23 to which the core 12 of the solenoid is connected, as by a link 24.

Each arm 9 is connected to the hub of its companion type bar through a pin-and-slot connection 25 permitting the type bar to flip ahead of the lever arm 9. The type bar 6 and the pin-and-slot connection per se form no part of this invention, and any type of mechanism transferring motion to the type bar may be used, in so far as the principal aspects of my invention are concerned.

As thus far described, depression of the key lever 1 actuates the companion arm 4 to move the companion coupling member 13 downwardly against the returning spring 16 and move the end 26 thereof into confronting relation with the universal bar 14, and also energizes the solenoid 11. When the universal bar 14 is moved forwardly or to the left (Figure 1), the universal bar through the coupling member 13 actuates the lever 9, which in turn actuates the type bar 6 to carry the type head up toward the platen or roll P.

The means (Figure 1) for causing the energization of the motor or solenoid 11 upon depression of the key lever includes what for brevity's sake is called a universal bar 27 with which the rear ends of the lever arms 5 coact, the universal bar 27 being common to all the lever arms 5, and switches or controls operated by the bar.

The universal bar 27 is here shown as mounted to be moved in an upward direction about an axis. It is shown as carried by a bracket 28 pivoted at 29 to the lever arm 23 of the connections for the universal bar 14 and as adjustable in proper relation to the ends of the lever arms 5, as by set screws 30. The pivotal movement of the bracket 28 is against the action of a returning spring 31. In so far as the connection between the core 12 of the solenoid 11 and the universal bar 14 is concerned, there may be but one arm 23, and in so far as supporting the universal bar 27 or the bracket 28 thereof is concerned, there are two additional arms similar to the arms 23, to which the brackets 28 are pivoted at 29. The universal bar 27 is here shown as tiltingly or pivotally connected to the bracket or bracket 28, as by pivots 32, and the adjusting screws 30 are located above and below the pivot, in order to tilt the universal bar 27 about its pivot 32 to such a degree that a cam surface 34 thereon will coact properly with the end of the lever arm 5 or rollers 35 at the ends of the arms 5.

In Figure 1, the controls for the solenoid 11 are operated by the universal bar 27. As shown in Figure 1, these consist of successively operable contacts 36, 37 movable with the bracket 28 and paired with contacts 38 and 39 carried by and movable with the lever arm 23 which transmits the movement of the core 12 of the solenoid 11 to the universal bar 14. The contacts 38, 39 are connected to the windings of the solenoid 11. The contacts 36, 37 are connected in feed circuits. The contacts 36, 37 constitute one section of a motor control or switch, which section is shiftable by the key levers into engagement with the contacts 38, 39. The contacts 38, 39 constitute another section shiftable by the core 12 or some part, as the lever 23, actuated thereby, in a direction away from the contacts 36, 37.

Upon depression of the key lever 1, the arm 5 will be actuated to engage the roller 35 with the universal bar 27, causing the bracket 28 to tilt about its pivot 29, bringing the contacts 36, 38 into engagement, and thus close a feed circuit to the windings of the solenoid 11. The current supplied is relatively weak and only partly energizes the solenoid, preferably insufficiently to cause it to move its core 12. This movement of the lever 1 also shifts the coupling member 13 into confronting relation with the universal bar 14. If during this partial dip of the key lever, the operator has inadvertently depressed another key, there is a chance for her fingers to react to withdraw the finger from the key not intended to be depressed. Further dip of the key lever 1 causes the lever 5 to further tilt the universal bar 27 and its bracket 28 about the axis 29 to bring the contact 37 into engagement with the contact 39, cutting in a strong current to energize the solenoid sufficiently for it to actuate the core 12, the lever arms 23 and 19 and the universal bar 14, causing the universal bar 14 to actuate the selected type bar through the coupling member 13 of the companion key lever 1. As the core 12 of the solenoid moves upwardly, moving the lever arm 23 therewith, it also shifts the contacts 38 and 39 upwardly, so that if the operator does not continue to depress the key lever through the predetermined dip, the contact 37 will separate from the contact 39 and hence the motor will be de-energized and the universal bar 14 stopped in its actuating movement. The solenoid will continue to be partly energized through the contacts 36 and 38. A weak flip or momentum may have been given to the selected type bar 6 through the pin-and-slot connection 25, but the force sufficient to make an impression on the paper on the platen P will have been weakened. Hence, the removal of the typist's fingers from the key while the key is only partially operated will cut out the power mechanism, and the action of the typewriter mechanism is similar to that of the manual or non-power operated machine.

Also, an important feature of the invention is means for regulating the amount of boost or power applied by the solenoid 11, and means is provided for adjusting the power so applied from zero to maximum. This means is a variable resistance located in the feed line closed by the contacts 37 and 39.

Referring to Figure 6, 40 designates the variable resistance, which is adjustable to supply current of various strengths to the windings of the solenoid. Thus, the operator by adjusting the variable resistance can cut out all the power, so that the machine acts as a manual machine, or adjust the variable resistance, so that less than full power of the motor or solenoid is used to

boost the manual operation, or cut in full power. Also, as seen in Figure 6, there is an additional variable resistance 41 in the circuit controlled by the contacts 36, 38. This is for the purpose of regulating the current controlled by the contacts 36, 38.

In Figure 6, S is an ordinary control switch in the feed circuit and is permanently closed while the machine is in operation. Referring again to Figure 6, the variable resistance 41 is adjusted to the proper point, so that closing of the contacts 36, 38 partly energizes the solenoid 11, and a switch 42 is closed. The variable resistance 40 is set initially to the speed of the operator. When the key bar 1 is depressed, the contacts 36, 38 are first closed, so that the current passes, say for instance, through wire 43, windings of solenoid 11, wire 44, contacts 36, 38, wire 45 through all or a portion of the variable resistance 41, in accordance with its setting, thence through wire 46 to contact 47, which is engaged with the switch 42, which is closed, thence through wire 48 to return wire 49. When the key has been depressed far enough to engage the contact 37 with the contact 39 and the operator continues to depress the key, or maintains the follow-up between the contact 37 and the contact 39, as the contact 39 is moving with the lever 23, the current passes through wire 43, windings of the solenoid 11, wire 44, wire 50, contacts 36, 39, wire 51, variable resistance 40 to return wire 49. When, however, the operator becomes very proficient and fast, she may readjust the variable resistance 40 to a point where it is cut out, open the switch 42 and close a switch 52, so that now when the key lever 1 is depressed and the follow-up maintained, the current passes, as before, from wire 43, through contacts 36, 38 and 37, 39, wires 45, 51, wire 46, contact 53, switch member 52 and back to the return wire 49, and any portion of the resistance 40 that is cut in. Also, the current passes from the wire 51 to return wire 49 through any portion, if any of the resistance is cut in. Thus, a very fast and proficient operator, not making mistakes, can speed up the machine by cutting out the resistances 40 and 41, so that the machine operates practically as a usual power machine, with the exception that the follow-up of the contacts moved by the key lever 1 and the contacts movable with the power lever 23 is maintained.

In Figure 2, the motor control means performing the function of the successively operable pairs of contacts 36, 38 and 37, 39 consist of a rheostat, the base 55 of which is carried by a part to be moved by the movable member or core 12 of the motor, when the motor is active, and the contact arm 56 which is actuated by the universal bar 27 through the bracket 28, the arm 56 being carried by the bracket 28. The arm 56 moves progressively over a series of contacts 57 connected in the motor circuit. The arm 56 and the base 55 with its contacts 57 constitute sections of a motor control shiftable respectively with the operated key lever and with the movable member of the motor. During the depression of a key lever 1, the arm 5 thereof actuates the universal bar 27 and the bracket 28 about its pivot 29 in the same manner, as in Figure 1, and the movement of the bracket or carrier 28 shifts the arm 56 of the rheostat onto a live contact 57, and as the key is further depressed, moves the arm 56 progressively over the contacts. As the lever or arm 23, which actuates the universal bar 14, is moved by the core 12 of the solenoid, it moves the base 55 with its contacts 57 relatively to the arm 56 in a direction away from the arm 56 in the same manner that in Figure 1 the contacts 37, 39 are moved relatively to the contacts 36, 37, unless the key continues to be depressed. Hence, if the operator hesitates in operating the key, an additional movement of the lever 23 and the base 55 of the rheostat will cause the rheostat to move relatively to the arm 56 and in effect cause a retrograde movement of the arm 56, slowing down or stopping the solenoid before the type head strikes.

Referring to Figure 7, when a key is depressed and the switch S closed, for the purpose of description, the current passes through wire 43, windings of the solenoid 11, wire 44, through arm 56 of the rheostat through the first contact 57, thence through wire 51, to the variable resistance 40 and thence to a return wire 49. As the arm 56 moves progressively over the contacts 57 of the rheostat, the current supplied to the windings of the solenoid becomes greater. The variable resistance 40 is adjustable to cut in various resistances from zero to maximum, as before described.

In Figure 3, another form of control performing the function of the pairs of contacts 36, 38 and 37, 39 (Figure 1) and rheostat 55, 56 (Figure 2) is shown, but operating, in so far as the result is concerned, on the same principle. The control in Figures 3, 4 and 5 consists of a photo-electric cell 60, a lamp 61 arranged to throw a beam of light on the cell 60, and shutters operated by the key levers for cutting off the beam of light striking the cell progressively. The photo-electric cell controls switches or relays in the motor circuit. The cell 60 and the lamp 61 constitute one section of a motor control movable with some part actuated by the motor or the core 12 thereof, the same as the contacts 38, 39 (Figure 1) and the rheostat base 55 (Figure 2) move with some part actuated by the core 12, and the shutters, another section shiftable by the key lever. As here shown, the cell 60 and lamp 61 are carried by crank arms 62 and 63 on the shaft 20, which shaft also carries the crank arms which carry the universal bar 14.

In the illustrated embodiment of my invention, there is a shutter for each key lever, instead of one shutter operated by a universal bar, as 27, (Figure 1) common to all the key levers.

64 designates the shutter, this being carried by some part actuated by the companion key lever 1, it being shown in mechanism here illustrated as carried by the arm 5 at the end of the arm 5, and the arm 5 (see constructions shown in Figures 2 and 4) actuates the shutter, instead of the universal bar 27. The shutter 64 is adjustable into position to properly cut through the beam of light to insure the desired operation of the relays by the cell 60, and is here shown as connected to the arm 5 to be adjusted vertically, by an adjusting screw 65 extending through the slot 66 in the shutter into the end of the arm 5. The lamp 61 is always illuminated while the machine is in use, and upon the depression of a key lever, the corresponding arm 5 is actuated to move its shutter 64 into and across the beam of light from the lamp 61, and partly cuts off the beam to the cell 60, and hence partly de-energizes the photo-electric cell, so that a weaker current through the relays in the motor circuit is supplied to the motor. The current gradually becomes weaker, as the shutter continues to progressively cut through the light beam. Hence, the action of the motor is the same as in the forms

shown in Figures 1 and 3, and the same follow-up or continued depression of the key lever is required, in order to keep the motor energized, as the cell 60 and lamp 61 move with the lever 63, as the core 12 of the solenoid is actuated by the windings of the solenoid. The beam of light may be directed or concentrated on the cell 60 by a shield, not shown, this being a tube open or slotted on its lower side to permit the shutters to enter it and cut off the beam of light.

In Figure 8, when the switch S is closed and a key lever is initially depressed and its shutter 64 begins to cut off the light to a portion or section 60a of the photo-electric cell 60, the coils 67 of a relay 68 are de-energized, so that its switch arm or core 69 is released, and drops by gravity and closes the motor feed circuit by bridging contacts 70, 71. Upon initial or touch depression of the key lever, the current passes through wire 43, the switch S being closed, windings of the solenoid 11, wire 44, variable resistance 41, wire 46, through the bridge or switch 69, wire 72 to return wire 73 of the lamp circuit. During further depression of the key lever, its corresponding shutter 64 progressively cuts off the section 60b of the photo-electric cell 60, so that the coils 74 of the relay 75 are de-energized and the switch arm or armature 76 is released and drops to bridge two contacts 77, 78. Now the current passes through wire 43, windings of the solenoid 11, wire 44, wire 51, bridge 76, through wire 79, variable resistance 40 and return wire 49. The lamp 61 is connected in the feed circuit through wire 80 and return wire 73. The bridges or relays 68 and 75 perform the function of the pairs of contacts 36, 38 and 37, 39 (Figure 1).

In Figure 5, a construction embodying a photo-electric cell is shown in which the solenoid is normally energized against the action of a spring, and when the current is weakened through the solenoid by the light being cut off from the photo-electric cell, when the key and its shutter is actuated, the force applied to the type bar is that of the spring.

The cores of the solenoids in the constructions shown in Figures 1, 2 and 3 are returned to normal positions by the retracting spring 21 for the universal bar 14.

In Figure 5, 81 designates a spring connected by a link 82 to the core 12 of the solenoid 11. The solenoid is normally energized so that the spring is under tension. The spring acts on the arm 23, which actuates the universal bar 14. The photo-electric cell 60 and lamp 61 are mounted the same as in Figure 4. In operation, when a key lever 1 is depressed, its corresponding shutter arm 5 moves its shutter into and across the beam of light from the lamp 61 and progressively cuts off the beam of light until the solenoid is so weak, that the spring 81 is free to react.

Referring to Figure 9, when the switch S is closed and the lamp 61 illuminated and casts its beam on the photo-electric cell 60, the current normally passes through wire 83, binding post 84 of an amplifier 85 and out through binding post 86 and return wire 87. The amplifier builds up a current sufficient to energize the solenoid against the action of the spring 81. The circuit may be described as follows: From terminal 88 of the cell 60 through wire 89, terminal 90 of the amplifier, terminal 91, thence through wire 92, through the windings of the solenoid 11, through wire 93, to terminal 94 of the amplifier, out through terminal 95 of the amplifier, wire 96 to terminal 97 of the photo-electric cell 60.

As the key lever 1 and its corresponding shutter 64 is actuated by the touch depression of the key lever, the beam of light striking the cell 60 is partly cut off and the output current of the cell, and hence, the amplifier, weakened. Continued dipping of the key lever additionally moves the shutter 64 through the beam of light, weakening the amplifier and the current through the solenoid, to such an extent that the spring 81 is free to react and actuate the type bar through the mechanism described in connection with Figure 1. The lamp 61 is normally illuminated through a circuit similar to that shown in Figure 8.

Instead of a construction, such as shown in Figure 1, in which the core of the solenoid is returned by a spring or by gravity, when the solenoid is de-energized, or a construction such as that shown in Figure 5, in which the solenoid is normally energized against the action of the spring 81, the core of the solenoid may be normally held neutral or idle by balanced solenoids. Such a construction is shown diagrammatically in Figure 10.

In Figure 10, 11a and 11b designate the windings of solenoids balanced or opposed to each other, and 12 the core normally held in neutral or idle position by the balanced coils. The motion of the core is transferred to the type bar 6 through a universal bar 14, as in the construction shown in Figure 1.

In Figure 10, with the switch S closed, the passage of the current may be illustrated as follows: through wire 101, adjustable resistance 102, coils of solenoid 11b through return wire 103, energizing solenoid windings 11b, so that they tend to pull the core 12 upward. The solenoid windings 11a are energized in opposition to windings of the solenoid 11b through the output current of an amplifier controlled by a photo-electric cell 60, which is energized when the beam of light from the lamp 61 is striking it. The current passes from terminal 104 of cell 60, through wire 105, terminal 106 of the amplifier 107 back through the terminal 108 of the amplifier, through wire 109 to the windings of the solenoid 11a, thence through wire 110 to terminal 111 to the amplifier 107 to terminal 112, wire 113 to the other terminal 114 of the photo-electric cell 60. Thus, normally the amplifier is at full strength and sufficient current is supplied to the windings 11a to balance the windings 11b. In order to strike a balance, the adjustable resistance 102 is provided. When the operator strikes a key lever 1, the corresponding shutter 64 begins to cut off the beam of light to the cell 60 and cuts it off, as the key is depressed. Consequently, the output current of the amplifier 107 is weakened, and hence the windings 11a weakened, so that the windings 11b are free to pull up the core 12 and actuate the selected type bar through the universal bar 14 and mechanism shown in Figure 1.

The machine provided in my invention may have any well known escapement, spacing and carriage return mechanism.

In all forms of my invention, the type bar mechanism, instead of being suddenly actuated, when the operator starts to depress a key, is actuated with the same technique as a manually operable typewriter, giving the metal action of the operator the same opportunity to react in the fingers as in a manually operable typewriter,

so that if the operator inadvertently strikes two keys at the same time, there is an opportunity, due to the mental reaction, to remove one of the fingers, or, if she starts to strike the wrong key, she can remove her finger, before the type bar strikes. Usually the typist knows, after she starts, whether or not she is striking the right key, and also instantly knows when she inadvertently strikes two keys, one with a finger she has unconsciously not lifted high enough. In the manual machine, there is time to correct such lapses, and in an ordinary power machine, there is no time, as the power acts instantly.

In my machine, there is the same opportunity to correct inadvertent mistakes, as in the manual machine. Also, by my machine, the power applied can be regulated to suit the mental reaction and skill of the operator, and also, an operator can gradually adjust the power machine from zero to maximum, as she progresses in skill and proficiency in the operation of the power machine.

What I claim is:

1. In a typewriter mechanism, a plurality of key levers and type bars corresponding thereto, a normally idle motor including a movable member, motion transmitting connections operated thereby for actuating the type bar corresponding to the key lever operated, control means operated by the key levers including two sections, one section being shiftable by the operation of a key lever into coaction with the other section, and the latter section being shiftable in a direction away from the former section by the movable member of the motor, as said member is actuated, whereby continued follow-up movement of the key lever is required to keep the motor energized, feed circuits for the motor in which said sections are connected, the sections operating to open and close the feed circuit, one of said sections comprising a source of light and a photo-electric cell located in the beam of light, and relays in the feed circuit operated by the photo-electric cell, and the other section including shutter means operated by the key levers when operated, for cutting off the beam of light, as a key is depressed, and thereby cutting down the output of the photo-electric cell circuit to the relays.

2. In a typewriter mechanism, a plurality of key levers and type bars corresponding thereto, a normally idle motor including a movable member, motion transmitting connections operated thereby for actuating the type bar corresponding to the key lever operated, control means operated by the key levers including two sections, one section being shiftable by the operation of a key lever into coaction with the other section, and the latter section being shiftable in a direction away from the former section by the movable member of the motor, as said member is actuated, whereby continued follow-up movement of the key lever is required to keep the motor energized, feed circuits for the motor in which said sections are connected, the sections operating to open and close the feed circuit, motion transmitting connections between each key lever and the corresponding type bar including a lost-motion-connection between the key lever and the type bar to bring said control parts into coaction, before motion is transmitted from the key lever to the type bar.

3. In a typewriter mechanism, a plurality of key levers and type bars, a normally idle motor including a movable member, motion transmitting connections between the motor member and the type bars including members operated respectively by the key levers, and means operated by the touch depression of the key levers for causing the motor to be partly energized insufficiently to fully actuate the type bar, and to be further energized sufficiently to actuate the selected type bar upon further depression of the key lever.

4. In a typewriter mechanism, a plurality of key levers and type bars corresponding thereto, a normally idle motor including a movable member, motion transmitting connections between the motor member and the type bar including coupling members operated respectively by the key levers, and a universal bar common to all of said coupling members and connected to the motor member to be operated thereby, said coupling members being normally out of position to coact with the universal bar and movable into such position by the depression of the key levers, and a movable universal bar common to all the key levers operable by any one of them, and a control for the motor including two sections, one movable by the last named universal bar into and out of engagement with the other section, and the other section being shiftable with the movable motor member, as it is actuated in a direction away from the former section.

5. In a typewriter mechanism, a plurality of key levers and type bars corresponding thereto, a normally idle electric motor including a movable member, motion transmitting connections between the motor and the type bars including coupling members operated respectively by the key levers, and a universal bar common to all of said coupling members and connected to the motor member to be operated thereby, said coupling members being normally out of position to coact with the universal bar and movable into such position by the depression of the key levers, feed circuits for the motor, a plurality of successively operated normally open switch members in said circuits, and means operated by ony one of the key levers for closing the switch members progressively.

6. In a typewriter mechanism, a plurality of key levers and type bars corresponding thereto, a normally idle electric motor, motion transmitting connections between the motor and the type bars including coupling members normally out of, and operated into, coupling position by the key levers respectively, a universal bar common to all of said members and connected to the motor to be operated thereby, a plurality of successively operated normally open switches, and a universal bar common to all of the key levers to be operated thereby for closing the switches successively, the motor having feed circuits in which the switches are connected, the first switch being operable by the initial touch depression of the key levers to close one feed circuit to supply a weak current to the motor insufficient to positively actuate the type bars and the successive switch being operable to cut in the stronger current in the motor circuit sufficient to actuate the motor and the type bars, and motion transmitting connections between the key levers and the type bars to actuate the type bars independently of the motor.

7. In a typewriter mechanism, a plurality of key levers and type bars corresponding thereto, a normally idle electric motor, motion transmitting connections between the motor and the type bars including coupling members normally

out of, and operated into, coupling position by the key levers respectively, a universal bar common to all of said members and connected to the motor to be operated thereby, a plurality of successively operated normally open relays, and a universal bar common to all of the key levers to be operated thereby for closing the relays successively, the motor having feed circuits in which the relays are connected, the first relay being operable by the initial touch depression of the key levers to close one feed circuit to supply a weak current to the motor insufficient to positively actuate the type bars and a successive relay being operable to cut in the stronger current in the motor circuit sufficient to actuate the motor and the type bars, and motion transmitting connections between the key levers and the type bars to actuate the type bars independently of the motor, and a variable resistance in the motor circuit.

8. In a typewriter mechanism, a plurality of key levers and type bars corresponding thereto, a normally idle motor including a movable member, motion transmitting connections operated thereby for actuating the type bar corresponding to the key lever operated, and control means operated by the key levers for progressively energizing the motor as the key levers are depressed.

9. In a typewriter mechanism, a plurality of key levers and type bars corresponding thereto, a normally idle electric motor including a movable member, a feed circuit in which the motor is connected, motion transmitting mechanism operated by the movable member for actuating the type bar corresponding to the key lever operated, means for progressively controlling the flow of current through the feed circuit to progressively energize the motor, said means being operated by the key levers and controlling the flow of current to the motor in accordance with the amount of movement given a key lever.

10. In a typewriter mechanism, a plurality of key levers and type bars corresponding thereto, a normally idle electric motor including a movable member, a feed circuit in which the motor is connected, motion transmitting mechanism operated by the movable member for actuating the type bar corresponding to the key lever operated, means for controlling the flow of current through the feed circuit to progressively energize the motor, said means including a movable switch member operated by the key levers in accordance with the amount of movement given the key levers and operating to cut in additional current in the feed circuit, as a key lever is depressed.

11. In a typewriter mechanism, a plurality of key levers and type bars corresponding thereto, a normally idle motor including a movable member, motion transmitting connections operated thereby for actuating the type bar corresponding to the key lever operated, motion transmitting connections between the key levers and the type bars, whereby the type bars are actuated by the key levers, and control means operated by the key levers for progressively energizing the motor, as the key levers are depressed, whereby the motor and connections operated thereby serve as a booster to the force applied by the key levers to the type bars.

12. In a typewriter mechanism, a plurality of key levers and type bars corresponding thereto, a normally idle motor including a movable member, motion transmitting mechanism operated thereby for actuating the type bars including coupling members operated respectively by the key levers into coupling position, motion transmitting connections between the key levers and the type bars to actuate the type bars from the key levers, the coupling members being connected to the motion transmitting connections, and control means operated by the key levers for progressively energizing the motor, as the key levers are depressed.

13. In a typewriter mechanism, a plurality of key levers and type bars corresponding thereto, a normally idle electric motor including a movable member, a feed circuit in which the motor is connected, motion transmitting connections between the key levers and the type bars for actuating the type bars, as the key levers are depressed, motion transmitting means operated by the movable motor member for actuating the type bar corresponding to the key lever operated through the motion transmitting connections, and means for progressively increasing the flow of current to the feed circuit to progressively energize the motor, said means being operated by the key levers, as a key lever is dipped and in accordance with the amount of dip given to the key lever.

14. In a typewriter mechanism, a plurality of key levers and type bars corresponding thereto, motion transmitting connections between the key levers and the type bars, whereby the type bars are actuated by the key levers, a normally idle motor including a movable member, motion transmitting connections operated thereby for actuating the type bar corresponding to the key lever operated and including couplings controlled by the key levers respectively, and control means operated by the key levers for energizing the motor as the key levers are depressed, whereby the motor and connections operated thereby serve as a booster to the force applied to the type bar by the key lever.

15. In a typewriter mechanism, a plurality of key levers and type bars corresponding thereto, motion transmitting connections between the key levers and the companion type bars to normally actuate the type bars, a normally idle motor including a movable member, motion transmitting mechanism operated thereby for actuating the type bars including coupling members operated respectively by the key levers into coupling position, and control means operated by the key levers to control the energizing of the motor, as the key levers are depressed.

16. In a typewriter mechanism, a plurality of key levers and type bars corresponding thereto, motion transmitting connections between the key levers and the type bars, whereby the type bars are actuated by the key levers, a normally idle motor including a movable member, motion transmitting connections operated thereby for actuating the type bar corresponding to the key lever operated through a portion of the former motion transmitting connections, control means operated by the key levers including two sections, one section being shiftable by the operation of a key lever into coaction with the other section, and the latter section being shiftable in a direction away from the former section by the movable member of the motor, as said member is actuated, whereby continued follow-up movement of the key lever is required to keep the motor energized, and feed circuits for the motor in which said sections are connected, the sections operating to open and close the feed circuit.

17. In a typewriter mechanism, key levers and

type bars corresponding thereto, motion-transmitting connections between the key levers and the type bars, and power mechanism including motion-transmitting connections for actuating the type bar corresponding to the key lever actuated through a portion of the former motion-transmitting connections between the key lever and the type bar, and means controlling the operation of the power-operated connections of said power mechanism, the controlling means being operable by any one of the key levers and maintained in operation by the follow-up movement of the key levers, whereby substantially the full dip of the key lever operated is required to completely operate the type bar by the power mechanism.

18. In a typewriter mechanism, key levers and type bars corresponding thereto, motion-transmitting connections between the key levers and the type bars, and power mechanism including motion-transmitting connections for actuating the type bar corresponding to the key lever actuated through a portion of the former motion-transmitting connections between the key lever and the type bar, means controlling the operation of the power-operated connections of said power mechanism, the controlling means being operable by any one of the key levers, said controlling means including two sections, one shiftable by the operation of the key lever into co-action with the other section and the latter section being shiftable in a direction away from the former section by the operation of the power mechanism so that a continued follow-up movement of the key lever is required to keep the sections engaged and the power mechanism in effective operation.

HERBERT E. PAGE.