PCT WORLD INTELLECTUAL PROPERTY ORGANIZATION
International Bureau

INTERNATIONAL APPLICATION PUBLISHED UNDER THE PATENT COOPERATION TREATY (PCT)

(51) International Patent Classification 6 :
H03K 19/177

A1

(11) International Publication Number: **WO 96/35261**

(43) International Publication Date: 7 November 1996 (07.11.96)

(21) International Application Number: PCT/US96/05964

(22) International Filing Date: 30 April 1996 (30.04.96)

(30) Priority Data:
08/433,041 3 May 1995 (03.05.95) US

(71) Applicant: BTR, INC. [US/US]; c/o Corporation Trust Co. of Nevada, 1 East 1st Street, Reno, NV 89501 (US).

(72) Inventors: TING, Benjamin, S.; 21120 Sullivan Way, Saratoga, CA 95070 (US). PANI, Peter, M.; 1110 Ana Privada, Mountain View, CA 94040 (US).

(74) Agents: SOBRINO, Maria, E. et al.; Blakely, Sokoloff, Taylor & Zafman, 7th floor, 12400 Wilshire Boulevard, Los Angeles, CA 90025-1026 (US).

(81) Designated States: AL, AM, AT, AT (Utility model), AU, AZ, BB, BG, BR, BY, CA, CH, CN, CZ, CZ (Utility model), DE, DE (Utility model), DK, DK (Utility model), EE, EE (Utility model), ES, FI, FI (Utility model), GB, GE, HU, IS, JP, KE, KG, KP, KR, KZ, LK, LR, LS, LT, LU, LV, MD, MG, MK, MN, MW, MX, NO, NZ, PL, PT, RO, RU, SD, SE, SG, SI, SK, SK (Utility model), TJ, TM, TR, TT, UA, UG, UZ, VN, ARIPO patent (KE, LS, MW, SD, SZ, UG), Eurasian patent (AM, AZ, BY, KG, KZ, MD, RU, TJ, TM), European patent (AT, BE, CH, DE, DK, ES, FI, FR, GB, GR, IE, IT, LU, MC, NL, PT, SE), OAPI patent (BF, BJ, CF, CG, CI, CM, GA, GN, ML, MR, NE, SN, TD, TG).

Published
With international search report.
Before the expiration of the time limit for amending the claims and to be republished in the event of the receipt of amendments.

(54) Title: SCALABLE MULTIPLE LEVEL INTERCONNECT ARCHITECTURE

(57) Abstract

An improved field programmable gate array (FPGA) is provided which includes tab network connectors (410, 420, 430 ... 470) for interfacing groups of configurable function generators with lower levels of interconnect and for interfacing lower levels of interconnect with higher levels of interconnect. Furthermore, an innovative cluster architecture is utilized which provides fine granularity without a significant increase in configurable function generators. The tab connector network (410, 420 ... 470) can also be used to route a lower level routing line to a higher level routing line. This is particularly desirable in order to meet the needs for driving a signal along longer routing lines without requiring all signal drivers be sufficiently large to drive a signal along the longest routing line. The connector networks described enable a flexible routing scheme to be implemented in which the routing lines at each level are divided into sets. In addition, the innovative routing hierarchy consisting of the routing lines, block connector tab networks and turn matrices (710), permits an innovative, space saving floor plan to be utilized that is scalable.

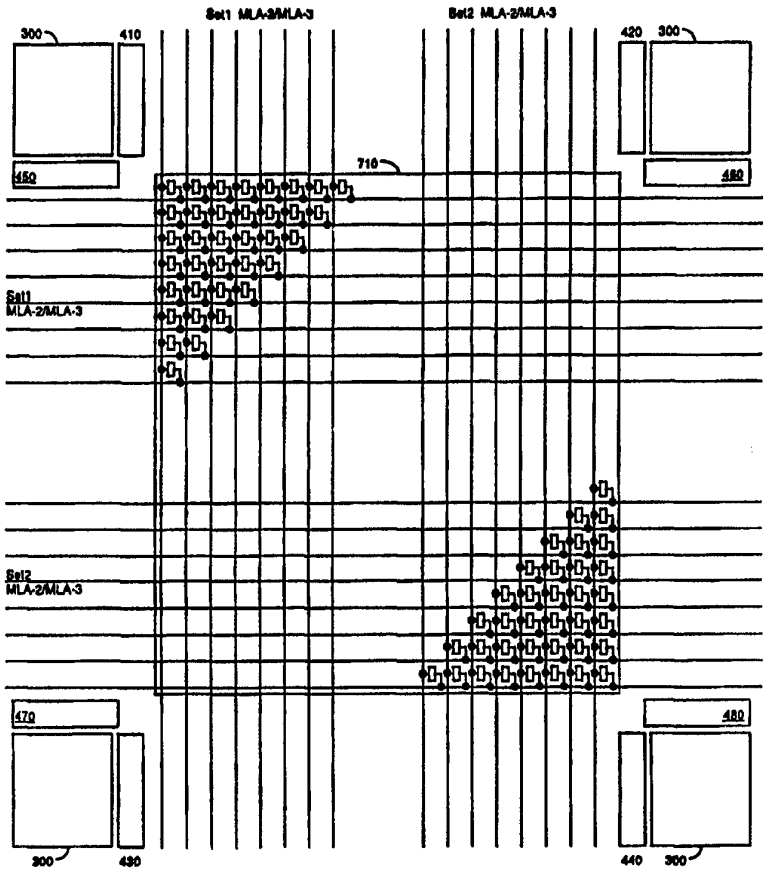

FOR THE PURPOSES OF INFORMATION ONLY

Codes used to identify States party to the PCT on the front pages of pamphlets publishing international applications under the PCT.

AM	Armenia	**GB**	United Kingdom	**MW**	Malawi
AT	Austria	**GE**	Georgia	**MX**	Mexico
AU	Australia	**GN**	Guinea	**NE**	Niger
BB	Barbados	**GR**	Greece	**NL**	Netherlands
BE	Belgium	**HU**	Hungary	**NO**	Norway
BF	Burkina Faso	**IE**	Ireland	**NZ**	New Zealand
BG	Bulgaria	**IT**	Italy	**PL**	Poland
BJ	Benin	**JP**	Japan	**PT**	Portugal
BR	Brazil	**KE**	Kenya	**RO**	Romania
BY	Belarus	**KG**	Kyrgystan	**RU**	Russian Federation
CA	Canada	**KP**	Democratic People's Republic of Korea	**SD**	Sudan
CF	Central African Republic			**SE**	Sweden
CG	Congo	**KR**	Republic of Korea	**SG**	Singapore
CH	Switzerland	**KZ**	Kazakhstan	**SI**	Slovenia
CI	Côte d'Ivoire	**LI**	Liechtenstein	**SK**	Slovakia
CM	Cameroon	**LK**	Sri Lanka	**SN**	Senegal
CN	China	**LR**	Liberia	**SZ**	Swaziland
CS	Czechoslovakia	**LT**	Lithuania	**TD**	Chad
CZ	Czech Republic	**LU**	Luxembourg	**TG**	Togo
DE	Germany	**LV**	Latvia	**TJ**	Tajikistan
DK	Denmark	**MC**	Monaco	**TT**	Trinidad and Tobago
EE	Estonia	**MD**	Republic of Moldova	**UA**	Ukraine
ES	Spain	**MG**	Madagascar	**UG**	Uganda
FI	Finland	**ML**	Mali	**US**	United States of America
FR	France	**MN**	Mongolia	**UZ**	Uzbekistan
GA	Gabon	**MR**	Mauritania	**VN**	Viet Nam

SCALABLE MULTIPLE LEVEL INTERCONNECT ARCHITECTURE.

BACKGROUND OF THE INVENTION

1. FIELD OF THE INVENTION

The present invention is directed to the field of programmable gate arrays. More particularly, the present invention is directed to a scalable multiple level connector tab network for increasing routability and improving speed of signals in a field programmable gate array.

2. ART BACKGROUND

A field programmable gate array (FPGA) is a cost effective, high density off the shelf integrated logic circuit which can be programmed by the user to perform logic functions. Circuit designers define the desired logic functions and the FPGA is programmed to process the signals accordingly. Depending on logic density requirements and production volumes, FPGAs are superior alternatives in terms of cost and time to market. A typical FPGA essentially consists of an outer ring of I/O blocks surrounding an interior matrix of configurable function generator (CFG) logic blocks. The I/O blocks residing on the periphery of an FPGA are user programmable such that each I/O block can be programmed independently to be an input or an output and can also be tri-statable. Each logic block typically contains CFGs and

storage registers. The CFGs are used to perform boolean functions on its input variables.

Interconnect resources occupy the channel between the rows and columns of the matrix of logic blocks and also between the logic blocks and I/O blocks. These interconnect resources provide flexibility to control the interconnection between two or more designated points on the chip. Usually a metal network of lines is oriented horizontally and vertically in rows and columns between the logic blocks. Programmable switches connect inputs and outputs of the logic blocks and I/O blocks to these metal lines. Cross point switches and interchanges at the intersection of the rows and columns are used to switch signals from one line to another. Often long lines are used to run the entire length and/or breadth or the chip in order to provide point to point connectivity. The functions of the I/O logic blocks and their respective interconnections are all programmable. Typically, these functions are controlled by a configuration program stored in an on-chip or separate memory.

As technology has become more and more sophisticated so has the functionality of FPGAs. The number of CFGs in an array has increased providing for more complex logic functions. It follows that the number of interconnection resources also has increased. Competing with the increased number of CFGs and interconnecting resources is the need to keep the chip as small as possible. One way to minimize the amount of real estate on the chip required is to

minimize the routing resources while maintaining a certain level of interconnectivity. Therefore, it can be seen that as the functionality implemented on the chip increases, the interconnection resources required to connect a large number of signals can be quickly exhausted. As a consequence, most CFGs are either left unused due to inaccessibility or the CFGs are used simply to interconnect wires instead of performing certain logic functions. This can result in unnecessarily long routing delays and low logic utilization. The alternative is to provide more routing resources which can increase the chip die size dramatically.

SUMMARY OF THE INVENTION

An improved field programmable gate array (FPGA) is provided which includes tab network connectors for interfacing groups of logic cells with lower levels of interconnect and for interfacing lower levels of interconnect with higher levels of interconnect. In one embodiment, the connector is used to interface a group of elements or configurable function generators (CFGs), including storage elements, to certain levels of a hierarchical routing network. Each group or cluster of a logic block is formed of multiple CFGs programmably coupled to a set of bidirectional input/output lines. In the present embodiment an innovative cluster architecture is utilized which provides fine granularity without a significant increase in logic elements. The bidirectional input/output line is coupled to the connector. The connector includes a connector tab line coupled to the bidirectional input/output line through a

programmable switch. The connector tab line is also coupled to the connector and bidirectional input/output line of an adjacent block. Frequently, signal routings occur between adjacent blocks, and in the prior art valuable routing lines which interconnect to higher levels of the routing hierarchy were used. In the improved FPGA of the present invention, a signal from a logic block can be directly routed to an adjacent logic block without utilizing the network of routing lines. This frees up the valuable routing lines to perform longer, non-adjacent block routings, and therefore the space required for non adjacent routing can be optimized. An additional, significant advantage is the minimizing of blockage caused by signal routings as each bidirectional input/output line is selectively coupled through two block connector tab networks to the routing hierarchy.

Also coupled to the bidirectional input/output line is a plurality of bidirectional switches that are programmable to permit a signal originating from the bidirectional input/output line to couple to one or more of a plurality of levels of hierarchical routing lines. A first programmable driver and second programmable driver are programmably coupled between the bidirectional input/output line and the plurality of switches. The first driver drives the signal received from the logic cells via the bidirectional input/output line out to one or more routing lines of the hierarchy of routing lines through determined programmable switches. The second driver takes a signal received from a routing line of the hierarchy of routing lines through a programmable switch to the bidirectional input/output

line. Thus, a flexible, programmable connector is provided. Furthermore, the connector can be programmed to provide a "fan out" capability in which the connector drives multiple routing lines without incurring significant additional signal delay and without using multiple tab connector networks.

In another embodiment, the tab connector network can also be used to route a lower level routing line to a higher level routing line. This is particularly desirable in order to meet the needs for driving a signal along longer routing lines without requiring all signal drivers be sufficiently large to drive a signal along the longest routing line. In particular, routing tabs lines are provided that span distances equivalent to a third level of the routing hierarchy. A tab network is coupled to each routing tab line to programmably connect each block through the tab line to one of a plurality of higher level routing lines. The connector includes programmable bidirectional drivers to drive the signal along the longer higher level routing lines of the routing hierarchy.

These connector networks enable a flexible routing scheme to be implemented in which the routing lines at each level are divided into sets. For example, one set can be accessible by a first set of logic elements or CFGs and a second set accessible by a second set of logic elements or CFGs. The first set of routing lines are accessible to the second set of logic elements or CFGs via the corresponding connector networks for the second set of logic elements or CFGs. Similarly, the

second set of logic elements or CFGs can access the first set of routing lines via the connector networks for the first set of logic elements or CFGs. It follows that the first set of CFGs and second set of CFGs can access both sets of routing lines thereby minimizing the likelihood of routing blockage of the signal.

Furthermore, a turn matrix is preferably included to cause the signal located on one routing line to transfer to a routing line in a different orientation. For example, a turn element of a turn matrix enables the signal to transfer between a horizontal and vertical routing line. As turn matrices require a significant amount of space on the chip, the connector networks can be utilized to provide sufficient connectivity, especially for the most commonly occurred two segments diagonal connect while minimizes the real estate for turn matrices. In particular, the connector networks enable the device to implement partial turn matrices, wherein up to half the number of turn elements are eliminated to save space on the chip.

In addition, this innovative routing hierarchy consisting of the multiple levels of routing lines, connector tab networks and turn matrices, permits an innovative, space saving floor plan to be utilized in an integrated circuit implementation, and is particularly efficient when SRAM is used as the configuration bits. This floor plan is a scalable block architecture in which each block connector tab networks of a 2 x 2 block grouping is arranged as a mirror image along the adjacent axis relative to each other. Furthermore, the bidirectional

input/output lines provided as the input/output means for each block are oriented only in two directions (instead of the typical north, south, east and west directions) such that the block connector tab networks for adjacent blocks face each other in orientation. This orientation and arrangement permits blocks to share routing resources. This reduces the routing segments requirement. In addition, this arrangement enables either a 2x2 block or a 4x4 block grouping to be scalable.

The innovative floor plan also makes efficient use of die space with little layout dead space as the floor plan provides for a plurality of contiguous memory and passgate arrays (which provide the functionality of the bidirectional switches) with small regions of logic for CFGs and drivers of the block connector tab networks. Therefore, the gaps typically incurred due to a mixture of memory and logic are avoided. Intra-cluster routing lines and bi-directional routing lines are intermixed and overlayed on different layers of the chip together with memory and passgate arrays to provide connections to higher level routing lines and connections between CFGs in the block.

BRIEF DESCRIPTION OF THE DRAWINGS

The object, features, and advantages of the present invention will be apparent from the following detailed description in which:

Figure 1 is a block diagram of a field programmable gate array logic upon which the present invention may be practiced.

Figure 2A illustrates one embodiment of a logic cluster.

Figure 2B illustrates one embodiment of local interconnect between logic clusters.

Figures 3A and 3B depict an example of a logic cluster with vertical block connectors.

Figure 4A illustrates the connection between block connectors and block connector tab networks which interface with higher level routing lines of the routing hierarchy.

Figure 4B shows exemplary horizontal block connector tab networks that programmably connect to vertical lines of multiple levels of the routing hierarchy.

Figure 4c shows exemplary vertical block connector tab networks that programmably connect to horizontal lines of multiple levels of the routing hierarchy.

Figure 5 is a simplified diagram illustrating a 2x2 logic block and the block connector tab networks that provide the interface to higher levels of the routing hierarchy in conjunction with the turn matrices.

Figure 6A and **Figure 6B** illustrate an alternate embodiment in which the block connector tab networks are connected to subsets of routing lines of multiple levels of routing lines.

Figures 7A, 7B and 7C respectively are a simplified block diagrams of embodiments of a horizontal and vertical MLA turn network for a first level of routing lines, and partial turn networks for second and third levels of routing lines.

Figure 8A is a simplified diagram illustrating a layout floor plan for a logic block.

Figure 8B is a simplified layout floor plan of a 2x2 logic block array.

DETAILED DESCRIPTION

An innovative connector tab network, interconnect architecture and layout floor plan for programmable logic circuits such as field programmable gate arrays (FPGAs) is described. In the following description for purposes of explanation numerous specific details are set forth, such as combinatorial logic cell or configurable function generator (CFG) configurations, number of CFGs, etc., in order to provide a thorough understanding of the present invention. It will be obvious, however, to one skilled in the art that the present invention may be practiced without these specific details. In other instances, well-known structures and devices are shown in block diagram form in order to avoid unnecessarily obscuring the present

invention. It should also be noted that the present invention describes an embodiment which utilizes static random access memory (SRAM) to control the state of bidirectional switches utilized. However the present invention pertains to a variety of processes, including, but not limited to, SRAM, dynamic random access memory (DRAM), fuse/antifuse, erasable programmable read-only memory (EPROM), electrically erasable programmable read-only memory (EEPROM) and ferroelectric processes. The concept of the connector tab networks utilized in the routing hierarchy as interface points and as bidirectional drivers, can be applied in deep submicron masked gate arrays where judicious placing of such drivers is critical.

Figure 1 is a block diagram illustration of an exemplary FPGA upon which the present invention may be practiced. The array 100 comprises I/O logic blocks 102, 103, 111, and 112, which provide an interface between external pins of the package of the FPGA and internal user logic, either directly or through the I/O logic blocks to the core interface blocks 104, 105, 113, and 114. The four interface blocks 104, 105, 113, and 114 provide decoupling between the core 106 and I/O logic blocks 102, 103, 111, and 112.

Core 106 includes the logic and interconnect hierarchy including the connector tab networks described herein in accordance with the teachings of the present invention. As will be described subsequently, this innovative interconnect hierarchy can be utilized to generate a floor plan that enables a significant savings on die size.

Thus, as the interconnect density increases, the die size increases at a significantly slower rate. The core includes programming for the CFGs as well as control logic. In the embodiment described herein, SRAM technology is utilized. However, fuse or antifuse, EEPROM/ferroelectric or similar technology may be used. A separate clock/reset logic 110 is used to provide clock and resets lines on a group basis in order to minimize skewing.

The present embodiment provides CFGs in groups called clusters. **Figure 2A** is an example of a logic cluster. It is contemplated that the logic cluster illustrated by **Figure 2A** is illustrative and logic cluster can be formed of other elements such as logic gates and flip-flops. Referring to **Figure 2A**, the logic cluster 200 is formed of four elements. These elements include one 2 input CFG 202, two three input CFGs 204, 206 and D flip-flop 208. CFG 202 can also be a three input CFG. The CFGs 202, 204, 206 are programmable combinatorial logic that provide a predetermined output based using two input values (for CFG 202) or three input values (for CFGs 204, 206). The CFGs are programmed with values to provide output representative of a desired logic function. The D flip flop 208 functions as a temporary storage element such as a register.

This combination of one two input, one output CFG, two three input one output CFGs and a D flip flop enable a variety of logic and arithmetic functions to be performed. For example, the elements can be programmed to perform such functions as comparator functions or

accumulator functions. It should be noted that this combination of elements provides a fine granularity without the addition of redundant elements which add to the die size and speed of processing. Furthermore, the combination of elements also maximizes usage of elements thereby maximizing usage of die size space. The fine granularity characteristic resulting in more output points that can be tapped is a desirable characteristic as often an intermediate signal generated by a particular combination of elements is needed.

In addition, the local interconnect within the cluster is structured to enable signals to be processed with minimum delays. The cluster elements, 202, 204, 206, 208, are connected through interconnection lines I-M0 through I-M5 (referred to herein collectively as I-Matrix lines) which are oriented horizontally and vertically through the logic cluster. These intraconnections of a cluster are programmable through switches, for example switches 220-244. Intraconnections lines I-M0 to I-M5 and switches 220-244 form what is referred to herein as the I-Matrix. The I-Matrix provides connectability among the elements 202, 204, 206, 208 to at least one other element of the cluster. For example, the output of the CFG 202 can be connected to the input of CFG 204 by enabling switches 224 and 228.

To insure minimum signal delays during processing, separate, direct connections are provided between the D flip flop 208 and the three input CFGs 204, 206. Continuing reference to **Figure 2A**,

switches 250-255 and connected lines provide such connections. It has been determined that the input and output of the three input CFGs 204, 206 often perform programmed functions in conjunction with the register 208. For example the three input CFGs can be utilized with the register to provide a one bit multiplexing function.

The bidirectional switches 250-255 can be programmed a variety of ways to route the signal to achieve a specific function. For example, a signal output by CFG 204 can drive D flip-flop 208 by enabling switch 251. Alternately, the signal may be driven onto the I-Matrix by enabling switch 250. Similarly, the output of CFG 206 can drive the input of the D flip-flop 208 by enabling switch 255. Other routing paths by selectively enabling switches are also possible. Furthermore, the output of the CFG 202 can drive the D flip -flop 208 by an indirect connection through the I-Matrix. Thus, extreme flexibility is achieved.

The routing of the output signal of the D flip-flop is also programmable through switches 252 and 253. By selectively enabling switches 252 or 253 and selective switches of the I-Matrix, the output signal can be routed to any one of the elements of the cluster or of other clusters. The signal output is selectively routed through the switches 233-235 adjacent to the CFG 204 or to switches 241, 242 and 243 adjacent to CFG 206. Die savings are achieved without decreasing the level of usage of elements in the device.

Each logic cluster is connectable to the other logic clusters inside the logic block through switches extending the I-matrix between neighboring clusters. **Figure 2B** illustrates I-matrix interconnection lines I-M0 to I-M5 of a first logic cluster 260 selectively connected to the I-Matrix lines of adjacent logic clusters 261 and 263, respectively through switches 264, 265, 266, 267, 275 and 276.

The flexibility herein described is partially achieved through the numerous bidirectional switches used. It was also noted previously that the switches can be implemented a variety of ways. For example, the switches can be implemented as fusible links which are programmed by blowing the fuse to open or short the switch. Alternately, the switch is a passgate controlled by a bit in an SRAM array. The state of the bits in the array dictate whether a corresponding passgates are open or closed. Although the SRAM implementation is often preferable because of programming ease, the die space required is significantly more. Therefore, one technique to minimize the die size is to use a fewer number of switches to provide interconnection between individual routing lines of the routing hierarchy described below. This is referred to herein as partial coverage structure. For example, in **Figure 2A** switches 221, 220 connect I-M0 and I-M5 to the inputs of CFG 202. As will be described below with respect to the present embodiment, partial turn matrices are used to eliminate up to 50% of the switches typically used in a turn matrix.

To allow an efficient implementation of a carry chain as well as other applications, staggered or barrel connections between clusters is used to increased connectivity. **Figure 2B** illustrates the extensions of the I-Matrix within a logic cluster to neighboring clusters. For example, switch 275 connects I-M5 of cluster 260 to I-M0 of cluster 261 and switch 276 connects I-M1 of cluster 260 to I-M2 of cluster 261.

A plurality of interconnected logic clusters form a logic block. In the present embodiment each logic block consists of four logic clusters organized in a 2x2 array. Each logic block has a set of bidirectional routing lines to which all CFGs inside the logic clusters are programmably connected. The bidirectional routing lines provide the path for signals to travel into and out of the logic block to the routing lines of a hierarchical routing architecture having multiple lengths of interconnections at different levels of the hierarchy. It can also be seen that the block connectors can also provide connections among the CFGs of the logic clusters of the same block and adjacent blocks. Although the input and output of each element of each logic cluster of the logic block can be selectively connected to each block connector, to control the expansion on die size it is preferred that each input and output is selectively connected to a subset of block connectors. An example of such an embodiment is shown in **Figure 3B**.

Referring to **Figure 3B**, a symbolic representation of one embodiment of the connections to block connectors within a block 300 is shown. Each element of each cluster 200, e.g., CFG1, CFG2 and

CFG3 is connected to two identified block connectors (BC) at the inputs. Two block connectors are identified as coupled to the output of the two input CFG1 and three block connectors are coupled to the output of the three input CFGs (CFG2, CFG3). The specific block connectors coupled to each elements are distributed among the elements of the block to maximize connectivity.

The block connectors provide the input and output mechanism for interconnecting to higher levels of connections of the routing hierarchy referred to as the multiple level architecture (MLA) routing network. The network consists of multiple levels of routing lines (e.g., MLA-1, MLA-2, MLA-3, etc.) organized in a hierarchy wherein the higher level routing lines are a multiple longer than the lower level routing lines. For example, MLA-2 routing lines are twice as long as MLA-1 routing lines and MLA-3 routing lines are twice as long as MLA-2 routing lines.

An innovative block connector tab network is utilized to interface the block connectors (BC) to the MLA routing network and to adjacent block connectors of adjacent logic blocks. As is shown in **Figure 4A**, a block connector tab network, for example, 401-408, is connected to each block connector line of each block 300. **Figure 4B** illustrates one embodiment of a horizontal block connector tab network which connects to vertical MLA routing lines. **Figure 4C** illustrates one embodiment of a vertical block connector tab network which connects to horizontal MLA routing lines.

In the embodiment shown in **Figure 4B**, the block connector (BC) tab network 401 of a first logic block includes a plurality of programmable switches 432-437. These bidirectional switches enable the selective routing of signals to and from the logic block through BC line 438. Also included in the network 401 are two programmable drivers 439 and 440. In the present embodiment, these drivers 439, 440 are controlled by the state of the two bits 441, 442; however, it is readily apparent that one control bit can be used in place of the two control bits wherein the driver, e.g., driver 440 is active when the bit is in one state and the second driver, e.g., driver 439 is active when the bit is in the second state. In addition, it is readily apparent that BC tab networks can also be implemented to perform the functionality described herein using as single or multiple drivers in conjunction with other elements.

The BC tab connector network provides a simple but efficient way to route the signals to and from a logic block. Through programmable switch 432, the signal to or from the block through BC line 438 is programmably coupled to the BC tab network 402 of an adjacent logic block. In the present illustration the signal routed over BC line 438 through switch 432 can be routed to BC line 443 through switch 454. The same signal that comes across line 415 from BC line 438 through switch 432, can be selectively routed through driver 456 and to a selected MLA through one of the four switches 447-450. For example, the BC tab networks, e.g., BC tab 401 and 402, are interconnected to MLA-1, 2 and 3, which are labeled as 425, 426, and

427. Thus, in addition to providing a direct routing mechanism to adjacent logic blocks, the BC tab network provides an alternate path for routing a signal to MLAs through the tab connector network of an adjacent logic block. This minimizes the occurrence of blockage or inaccessible routing paths. For example, an alternate path 451, is provided through switch 452 and switch 433 to interconnect block connectors 438 and 443. Thus, it can be seen that extreme flexibility in routing, as well as efficiency in routing, can be achieved utilizing these BC tab networks. An additional advantage is signal speed; this architecture results in lightly loaded lines and therefore no signal speed penalty is realized even though routing flexibility is enhanced. In **Figure 4B**, the BC tab network can be used to provide a signal fan out capability to connect to multiple MLA lines by setting the appropriate switches, e.g., 434, 435, 436, 437, without incurring signal speed penalties typically realized in a fan out arrangement.

In one embodiment such as illustrated in **Figure 5**, each BC line is programmably connected through a BC tab network to an adjacent BC tab network and to the routing lines of the MLA network. This provides extreme flexibility in routing. The MLA routing network in the present embodiment is described having a plurality of levels of routing lines with a programmable switch matrix selectively coupling horizontal and vertical MLA lines to enhance connectivity. The level 1 MLA routing lines (MLA-1) provide interconnections between several sets of block connectors. Programmable switches are used to provide users with the capability of selecting the block connectors to be

connected. Thus, a first logic block from one set of logic block groups is connectable to a second logic block belonging to the same group wherein a logic block group is a set of logic blocks. The switches within a logic block can, of course, be further programmed to route the signal within the logic block. The level 2 MLA routing lines (MLA-2) provide interconnections to various MLA-2 lines to affect access and connections of a block cluster, which consists of a 4x4 matrix of blocks in the present embodiment. Switches are provided to enable the user to program the desired connections. The span of the level 2 MLA lines is preferably a factor greater than the span of the MLA-2 lines. For example, the MLA-2 lines are preferably twice the span of an MLA-1 line.

As can be seen, additional levels of MLA routing lines can be implemented to provide programmable interconnections for larger numbers and groups of logic blocks, block clusters, block sectors (which is an 8x8 matrix of blocks), etc. Each additional level spans a distance a factor greater (such as a multiple of 2 greater) than the adjacent lower level. Thus, a multi-dimensional approach for implementing routing is provided. Signals are routed amongst the interconnections of a logic block. These signals are then accessed through block connectors and the corresponding block connector tab networks and routed according to the programmed switches. The block connector tab networks enable a programmable direct connection to higher levels of MLA routing lines, for example, MLA-2 and MLA-3 routing lines. Alternately, higher levels of routing lines

of the hierarchy can be reached through the lower levels of the hierarchy through programmable switches located between levels of routing lines of the hierarchy.

Figures 6A and **6B** disclose an alternate embodiment in which each BC tab network is connected to a set of the routing lines of multiple levels of routing lines. An adjacent BC tab network is connected to another set. In the present invention the number of lines in each set is the same as the number of MLA lines of a level which is not divided into sets. The resultant effect is the doubling of the number of routing lines and hence increased connectivity. However, the sets can also include fewer or additional lines in order to achieve the desired level of connectivity.

Signals are programmably routable between BC tab networks to achieve the desired level of connectivity. For example, **Figure 6A** illustrates adjacent horizontal BC tab networks 600, 605. BC network 600 is programmably connected to a first set of MLA-2 lines 615. Similarly, the adjacent BC tab network 605 is programmably connected to a second set of MLA-2 lines 620. If a signal, for example, originating on BC line 627, is to be routed to a signal line of MLA-2 coupled only to BC tab network 605, the signal can be routed from BC tab network 600 to BC tab network 605 through switch 631, through tab line 629, driver 630 and switch 632 to programmably connect to MLA-2 lines 620. Similarly, if a signal originating from a block connected to BC tab network 605 is to be routed to MLA-3 635, the signal is routed via BC

tab network 600 through switch 633, driver 634, switch 636 to MLA-3 635. The BC tab network therefore functions to provide increased connectivity in a limited connectivity structure. The BC tab networks also enable the designer to minimize loading and maximize signal speed by selecting the best MLA lines to route a signal, whether or not the MLA is accessible through an adjacent BC tab connector network. In addition, loading is minimized. In particular, the BC tab connector network and a partial turn matrix reduces loading up to 50%, resulting in significant improvements of signal speed.

In the present embodiment, the first three levels of the routing hierarchy, MLA-1, MLA-2 and MLA-3, are used to interconnect a 8x8 block matrix, wherein each block is formed of four logic clusters. Each block is programmably connected to a MLA tab line via the BC tab connector network. Each MLA tab line is programmably connected to a MLA tab connector network which functions in a manner similar to the BC tab network to route signals to and from higher level routing lines.

As the number of CFGs on the chip increases, additional interconnect is needed. In the present architecture, it is desirable to add to the levels of the routing hierarchy to maintain routability of signals. At each higher level of the hierarchy, there is an increase in the length of the routing from the lower level routing lines. In order to drive longer signal routing lines, larger signal drivers are needed. To minimize the effect on die size, it is preferred to limit the number

of signal drivers that drive the longer routing line characteristic in the higher levels of the routing hierarchy. In addition, it is preferable that the architecture be scalable to provide an effective design mechanism to accommodate increasing densities of logic circuits on a chip and the connectivity required and to minimize engineering efforts associated with large number of parts. Therefore, it has been found that after a first number of levels of the hierarchy, it is desirable to provide an MLA tab connector network to enable scalability, as well as to provide signal driving functions for the longer, higher levels of routing lines.

Programmable turn switches are preferably provided to connect selectively horizontal MLA lines and vertical MLA lines. This is illustrated in **Figure 7A**. **Figure 7A** shows a turn matrix which is a portion turn network 710 for eight lines of an MLA-1 interconnecting four logic blocks 712, 714, 716 and 718. The turn network 710 is controlled by a plurality of turn bits which control whether a particular intersection of a horizontal MLA line, e.g., line 720, and a vertical MLA line, e.g., 722, are connected such that the signal may be routed between the horizontal 720 and vertical 722 MLA line. Figure 7A is representative of a turn matrix that is used to interconnect MLA-1 routing lines. This turn matrix 710 provides complete coverage, i.e., each horizontal MLA-1 line is programmably connected to each vertical MLA-1 line.

Complete turn matrices can also be utilized for the higher level MLA lines, e.g., MLA-2 and MLA-3. However, in the present

embodiment the number of lines at each level has multiple sets of routing lines. To save on die space by decreasing the number of switches needed to form the turn matrix, partial turn matrices are used. **Figure 7B** is illustrative of partial turn matrices of turn network 710 for MLA-2 and MLA-3 lines within a 2x2 matrix of logic blocks. As noted earlier, the die savings achieved by minimizing the size of the turn matrices more than offsets any decrease in connectivity. Furthermore, any decrease in connectivity is also offset by the capability of routing signals through the block connector tab networks 410, 420, 430, 440, 450, 460, 470, 480 to other routing lines in the MLA routing hierarchy as illustrated in **Figure 6A** and **Figure 6B**.

Figure 7C provides an embodiment of the partial turn matrices utilized to interconnect MLA-2 and MLA-3 routing lines in a 4x4 matrix composed of 4 2x2 matrices of logic blocks . It should be noted that the location of the individual switches in the partial turn matrices are arranged to balance the load on each line. In particular, it is desirable that the same number of switches are located on each line to maintain a constant load on each line. In the present embodiment this is accomplished by alternating the mirror images of the partial turn matrices such as is shown in **Figure 7C**.

This innovative routing hierarchy consisting of the routing lines, block connector tab networks and turn matrices, permits an innovative, space saving floor plan to be utilized on a semiconductor device. The benefits of the architecture and the innovative floor plan

discussed herein can be seen particularly in an SRAM implementation. Extensive die savings is realized by grouping memory into large, contiguous blocks. This is quite different from prior art floor plans which integrate logic and memory resulting in significant wasted space, often referred to as layout dead space. In addition, this floor plan includes a scalable block architecture in which each block includes a plurality of contiguous memory and passgate arrays. Intra-cluster routing lines and bi-directional routing lines are overlayed on different layers over the memory and passgate arrays to provide connections to higher level routing lines and connections between CFGs in the block. Each memory and passgate array includes the SRAM and passgates to control the programmable switches described above. The floor plan of a single block is easily scalable to generate floor plans of multiple block structures. In the present embodiment, a 4x4 matrix of blocks including routing lines and turn matrices are scalable to larger matrices of blocks by simple replication and abutment of 4x4 matrices.

The innovative floor plan will be described with reference to the embodiment shown in **Figures 8A and 8B**. One embodiment of the floor plan for a logic block is shown in **Figure 8A**. Each logic cluster 800 includes the elements or the CFGs of the cluster 820 and the I-Matrix which is formed of the I-Matrix lines 841-846 and the memory and passgate array 830 which controls the selective connections between the I-Matrix lines and I/O lines 801-811 of the CFGs coupled to the elements of the cluster. I-Matrix extensions 840

formed of a small memory and passgate array are located between adjacent memory and passgate array 830 to selectively connect the I-Matrix lines 841-846 of a cluster to the I-Matrix of an adjacent cluster.

Selectively coupled to the elements of each cluster 820 are the block connectors which include the block connectors lines 861-868 (vertical block connectors not shown for purposes of simplification of **Figure 8A**) and the memory and passgate array 850 which controls the routing of signals between the elements of the cluster and the block connector lines.

This floor plan is best realized by using a logic design that meets the following criteria. Each block provides for bidirectional input/output access in less than all possible directions (i.e., north, south, east and west) or "sides" of a block. In the present embodiment each block provides block connector tab networks on two sides of the block, one in a horizontal direction and one in a vertical direction. The block connector tab networks, which are preferably replicas of each other, are oriented mirror to each other along respective axis in a 2x2 array. This can be visualized by referring back to **Figure 7C**. Referring to **Figure 7C**, and in particular the orientation of the block connector tab networks, 410 is a mirror image of 450, 460 is a mirror image of 480, 440 is a mirror image of 430 and 470 is a mirror image of 450.

Continuing reference to **Figure 7C**, the mirroring is performed such that the programmable switches, i.e., switches that connect

elements to I-Matrix lines, switches that connect elements of clusters to block connector lines and switches that provide the I-Matrix extensions, corresponding to each block can be adjacent in the floor plan. As can be seen in **Figure 8A**, a 2x2 matrix can be designed to have memory and passgate arrays 830, 840 and 850 implemented as a contiguous block of memory 855. In addition to minimizing layout dead space, this floor plan simplifies manufacture as the majority of the die consists of memory arrays with small sections of logic (e.g., logic cluster 820). Furthermore, by providing groupings of memory arrays, the programming of the chip is simplified as simple X-Y addressing can be used.

An additional benefit to the floor plan is that the arrangement of blocks enables a simple, effective way to enable adjacent blocks to share routing resources without adding on significantly to the number of lines or additional bits.

Figure 8B continues the illustration of the innovative floor plan by showing the layout for a 2x2 block. Each block (shown in outline form as element 860) includes a plurality of block connectors BC0-BC7. The floor plan of each block 860 is that described in **Figure 8A**. As described previously, the block connector lines inside each 860 are coupled to block connector tab networks which provide connections to adjacent blocks and to higher level routing lines of the routing hierarchy. Memory and passgate arrays 880 represent the switches for the block connector tab networks. The driver logic 882,

which includes the drivers located in the block connector tab networks, is separate from the memory and requires a small portion of the die. The turn matrix 884 is also composed of a memory and passgate array. The MLA lines, not shown, are preferably oriented in a parallel layer over memory and passgate arrays 880 and 884 to provide a simple means to control connectivity.

This floor plan is scalable by replication of the arrangement shown in **Figure 8B**. As noted previously, however, to minimize loading on the lines in the present embodiment that uses partial turn matrices, it is preferred that the partial turn matrices alternate in orientation such as is shown in **Figure 7C**. Once a 4X4 block matrix floor plan is realized, the realization of larger matrices is achieved by replication of the 4x4 matrix and the abutment of the routing lines and block connectors of adjacent matrices.

The advantages to such a floor plan is apparent to one skilled in the art. Enhanced usage of die space is achieved. In addition, scalability is easily achieved by replication of the layout for the logic blocks which allows for easy proliferation of varying sizes of devices to be built with minimum engineering efforts.

CLAIMS

What is claimed is:

1. A block connector tab network for interfacing a first logic block to at least one second logic block through bidirectional routing lines, said first logic block comprising a plurality of programmable interconnected configurable function generators (CFGs) for performing functions on signals, said block connector tab network comprising:

a first bidirectional input/output line, at least one CFG of the first logic block programmably coupled to the first bidirectional input/output line;

a first programmable switch coupled to the first bidirectional input/output line;

a first block connector tab line coupled to the first programmable switch and a first bidirectional input/output line of the second logic block to provide a programmable connection between the first bidirectional input/output line of the first logic block and the first bidirectional input/output line of the second logic block;

a plurality of second programmable switches coupled to the bidirectional routing lines;

a first programmable driver coupled to the bidirectional input/output line and the plurality of second programmable switches, said first programmable driver programmably driving a signal

received across the bidirectional input/output line to the plurality of second programmable switches;

a second programmable driver coupled to the bidirectional input/output line and the plurality of second programmable switches, said second programmable driver programmably driving a signal received via a switch of the plurality of second programmable switches to the bidirectional input/output line.

2. The block connector tab network as set forth in claim 2, further comprising a third programmable switch coupled between the bidirectional input/output line and the first programmable driver and second programmable driver.

3. The block connector tab network as set forth in claim 2, further comprising a second block connector tab line originating from the block connector tab network of the second logic block, said second block connector tab line programmably coupled to the bidirectional input/output line.

4. The block connector tab network as set forth in claim 1, wherein each first programmable switch and second programmable switches comprises a nonvolatile switching element.

5. The block connector tab network as set forth in claim 1, wherein each first programmable switch and second programmable

switches is programmable according to a state of a bit stored in a memory.

6. The block connector tab network as set forth in claim 1, wherein the first programmable driver is programmable according to a state of a first bit stored in memory and the second programmable driver is programmable according to a state of a second bit stored in memory.

7. The block connector tab network as set forth in claim 1, wherein the first programmable driver is programmable according to a state of a first bit stored in memory and the second programmable driver is programmable according to a complement of the state of the first bit.

8. A logic device comprising:

a plurality of logic blocks, each logic block comprising a plurality of programmable interconnected configurable function generators (CFGs) for performing functions on signals;

a first set of bidirectional routing lines oriented in a first direction and second set of bidirectional routing lines oriented in a second direction for coupling the plurality of logic blocks;

a plurality of block connector tab networks for interfacing each logic block of the plurality of logic blocks to the first set of

bidirectional routing lines, each block connector tab network comprising;

a first bidirectional input/output line, each CFG of the logic block of the plurality of logic blocks programmably coupled to the first bidirectional input/output line,

a plurality of first programmable switches coupled to the first set of bidirectional routing lines,

a first programmable driver coupled to the bidirectional input/output line and the plurality of first programmable switches, said first programmable driver programmably driving a signal received across the bidirectional input/output line to the plurality of first programmable switches, and

a second programmable driver coupled to the bidirectional input/output line and the plurality of first programmable switches, said second programmable driver programmably driving a signal received via a switch of the plurality of first programmable switches to the bidirectional input/output line; and

a turn matrix comprising a plurality of third programmable switches, each switch programmably coupled between a routing line of the first set of routing lines and a routing line of the second set of routing lines.

9. The logic device as set forth in claim 8, further comprising a second block connector tab line originating as the first

block connector tab line from the block connector tab network of the adjacent logic block, said second block connector tab line programmably coupled to the bidirectional input/output line.

10. The logic device as set forth in claim 8, wherein the first set of bidirectional routing lines are oriented perpendicular to the second set of bidirectional routing lines.

11. The logic device as set forth in claim 8, further comprising a plurality of the block connector tab networks for interfacing each logic block of the plurality of logic blocks to the second set of bidirectional routing lines.

12. The logic device as set forth in claim 8, wherein each block connector tab network further comprises:

a second programmable switch coupled to the first bidirectional input/output line,

a first block connector tab line coupled to the second programmable switch and a first bidirectional input/output line of an adjacent logic block to provide a programmable connection between the first bidirectional input/output line of the logic block and the first bidirectional input/output line of the adjacent logic block.

13. The logic device as set forth in claim 12, wherein each first programmable switch, second programmable switches and third programmable switches comprises a fuse.

14. The logic device as set forth in claim 12, wherein each first programmable switch, second programmable switches and third programmable switches is programmable according to a state of a bit stored in a memory.

15. The logic device as set forth in claim 8, wherein the turn matrix is a partial turn matrix selectively coupling a portion of the routing lines of the first set of routing lines and a portion of the routing lines of the second set of routing lines.

16. The logic device as set forth in claim 8, wherein the turn matrix is a full coverage turn matrix selectively coupling each routing line of the first set of routing lines to a corresponding routing lines of the second set of routing lines.

17. A logic device comprising:

a plurality of logic blocks, each logic block comprising a plurality of programmable interconnected configurable function generators (CFGs) for performing functions on signals;

a first set of bidirectional routing lines coupling the plurality of logic blocks;

a first block connector tab network for interfacing a first logic block of the plurality of logic blocks to a first portion of the first set of bidirectional routing lines said first block connector tab network comprising;

a first bidirectional input/output line, each CFG programmably coupled to the first bidirectional input/output line, and

a plurality of first programmable switches coupled between the first bidirectional input/output line and the first portion of the first set of bidirectional routing lines;

a second block connector tab network for interfacing a second logic block of the plurality of logic blocks to a second portion of the first set of bidirectional routing lines, said second block connector tab network comprising;

a second bidirectional input/output line, each CFG programmably coupled to the second bidirectional input/output line, and

a plurality of second programmable switches coupled between the second bidirectional input/output line and the second portion of the first set of bidirectional routing lines;

said first block connector tab network further comprising a first block connector tab line coupled to the first programmable switch and the second bidirectional input/output line to provide a programmable connection between the first bidirectional input/output line of the

first logic block and the second bidirectional input/output line of the second logic block; and

said second block connector tab network further comprising a second block connector tab line coupled to the third programmable switch and the first bidirectional input/output line to provide a programmable connection between the second bidirectional input/output line of the second logic block and the first bidirectional input/output line of the first logic block;

said first and second block connector tab networks programmable to respectively couple the first and second logic blocks to the second and first portions of the first set of bidirectional routing lines.

18. The logic device as set forth in claim 17, further comprising:

a second set of bidirectional routing lines having a first portion and second portion, said first set of routing lines oriented in a first direction and said second set of bidirectional routing lines oriented in a second direction;

a first turn matrix comprising a plurality of switches to selectively couple lines of the first portion of the first set of bidirectional routing lines to lines of the first portion of the second set of bidirectional routing lines; and

a second turn matrix comprising a plurality of switches to selectively couple lines of the second portion of the first set of

bidirectional routing lines to lines of the second portion of the second set of bidirectional routing lines.

19. The logic device as set forth in claim 17, further comprising:

a second set of bidirectional routing lines having a first portion and second portion, said first set of routing lines oriented in a first direction and said second set of bidirectional routing lines oriented in a second direction; and

a turn matrix comprising a plurality of switches to selectively couple lines of the first set of bidirectional routing lines to lines of the second set of bidirectional routing lines.

20. The logic device as set forth in claim 19, wherein the turn matrix is a partial turn matrix selectively coupling a portion of the routing lines of the first set of routing lines and a portion of the routing lines of the second set of routing lines.

21. The logic device as set forth in claim 19, wherein the turn matrix is a full coverage turn matrix selectively coupling each routing line of the first set of routing lines to a corresponding routing lines of the second set of routing lines.

22. The logic device as set forth in claim 17, wherein

said first block connector tab network further comprises a first programmable driver coupled to the first bidirectional input/output line and the plurality of first programmable switches, said first programmable driver programmably driving a signal received across the first bidirectional input/output line to the plurality of first programmable switches, and a second programmable driver coupled to the first bidirectional input/output line and the plurality of first programmable switches, said second programmable driver programmably driving a signal received via a switch of the plurality of first programmable switches to the first bidirectional input/output line.

23. The logic device as set forth in claim 17, wherein

a third programmable driver coupled to the second bidirectional input/output line and the plurality of second programmable switches, said third programmable driver programmably driving a signal received across the second bidirectional input/output line to the plurality of fourth programmable switches, and a fourth programmable driver coupled to the second bidirectional input/output line and the plurality of fourth programmable switches, said fourth programmable driver programmably driving a signal received via a switch of the plurality of fourth programmable switches to the second bidirectional input/output line.

24. A programmable device comprising a plurality of elements that perform operations on signals, said elements programmably connectable to a plurality of levels of bidirectional routing lines organized hierarchically wherein lines of each higher level of the hierarchy of bidirectional routing lines are longer than lines of an adjacent lower level, a routing line connector tab for interfacing an element to levels of bidirectional routing lines higher than a predetermined level, said routing line connector tab comprising:

bidirectional input/output line, each element programmably coupled to the bidirectional input/output line;

a plurality of programmable switches coupled to the lines of levels of bidirectional routing lines higher than the predetermined level;

a first programmable driver coupled to the bidirectional input/output line and the plurality of programmable switches, said first programmable driver programmably driving a signal received across the bidirectional input/output line from lines of bidirectional routing lines lower than a predetermined level, to the plurality of programmable switches, such that the signal is selectively driven on a line of a level of bidirectional routing lines higher than the predetermined level;

a second programmable driver coupled to the bidirectional input/output line and the plurality of programmable switches, said second programmable driver programmably driving a signal received

from a line of a level of bidirectional routing lines higher than the predetermined level via a switch of the plurality of programmable switches to the bidirectional input/output line, such that the signal is driven on a line of bidirectional routing lines lower than the predetermined level.

25. The programmable logic device as set forth in claim 24, wherein each switch of the plurality of programmable switches is programmably coupled to one line of the bidirectional routing lines higher than the predetermined level.

26. The programmable logic device as set forth in claim 24, wherein the first bidirectional input/output line comprises a set of first bidirectional input/output lines.

27. The programmable logic device as set forth in claim 24, wherein each level of bidirectional routing lines comprises a plurality of sets of routing lines.

28. The programmable logic device as set forth in claim 24, wherein the bidirectional routing lines comprise a first set oriented in a first direction and a second set oriented in a second direction, said programmable routing device comprising a plurality of routing line connector tabs, at least one routing line connector tab selectively coupled to lines of the routing lines of a level higher than the

predetermined level in the first set of bidirectional routing lines and at least one second routing line connector tab selectively coupled to lines of the routing lines of a level higher than the predetermined level in the second set of bidirectional routing lines.

29. A fine granularity programmable logic device comprising a plurality of interconnected logic clusters for performing operations on signals each said logic cluster comprising:

a first element comprising first programmable combinatorial logic that receives at least two inputs and generates a single first output;

a second element comprising a second programmable combinatorial logic that receives three inputs and generates a single second output;

a third element comprising a third programmable combinatorial logic that receives three inputs and generates a single third output;

a register having an input and an output;

an interconnection matrix comprising a set of interconnection matrix lines and programmable switches that programmably interconnect inputs and outputs of the first, second and third outputs and the register;

at least one first direct input line and switch that programmably couples the output of the second element to the input of the register; and

at least one second direct input line and switch that programmably couples the output of the third element to the input of the register.

30. The fine granularity logic device as set forth in claim 29 wherein the register is programmably coupled to the interconnection matrix by programmably coupling the output of the register to the output of the second element and the third element such that the output of the register is routed to the interconnection matrix through a coupling of the output of the second element or third element to the interconnection matrix.

31. The fine granularity logic device as set forth in claim 29, wherein the register is a D flip flop.

32. The fine granularity logic device as set forth in claim 29, wherein the first logic device comprises no more than two and no less than three inputs.

33. The fine granularity logic device as set forth in claim 29 wherein the interconnection matrix of a logic cluster is programmably coupled to adjacent logic clusters through programmable extensions interconnecting elements of adjacent logic clusters.

34. In a programmable logic device comprising a plurality of logic elements, a method for interconnecting the logic elements comprising the steps of:

routing resources of a first group of hierarchical routing, said resources of the first group comprising at least one level of first bidirectional routing lines, and at least one bidirectional tab routing line;

routing resources of a second group of hierarchical routing, said resources of the second group comprising at least one level of second bidirectional routing lines;

programmably coupling a connector tab network between at least one bidirectional tab routing line and the second bidirectional routing lines, said connector tab network comprising at least one programmable driver for programmably driving a signal received from the bidirectional tab routing line to a selected second bidirectional routing line and a signal received from a selected second bidirectional routing line to the bidirectional tab routing line.

35. The method as set forth in claim 34, wherein each succeeding higher level of comprises first bidirectional routing lines having a length a factor greater than the length of first bidirectional routing lines of a preceding lower level.

36. The method as set forth in claim 35, wherein the bidirectional tab routing line has a length corresponding to the highest level of first bidirectional routing lines.

37. The method as set forth in claim 34, further comprising the step of sizing a signal driver that drives a signal from the bidirectional tab routing line to the selected second bidirectional routing line is of sufficient size to drive the highest level of second bidirectional routing lines.

38. The method as set forth in claim 37, wherein the at least one signal driver comprises two signal drivers wherein said first signal driver that drives a signal from the bidirectional tab routing line to a selected second bidirectional routing line is larger than the second signal driver that drives a signal from the selected second bidirectional routing line to the bidirectional tab routing line.

FIG. 1

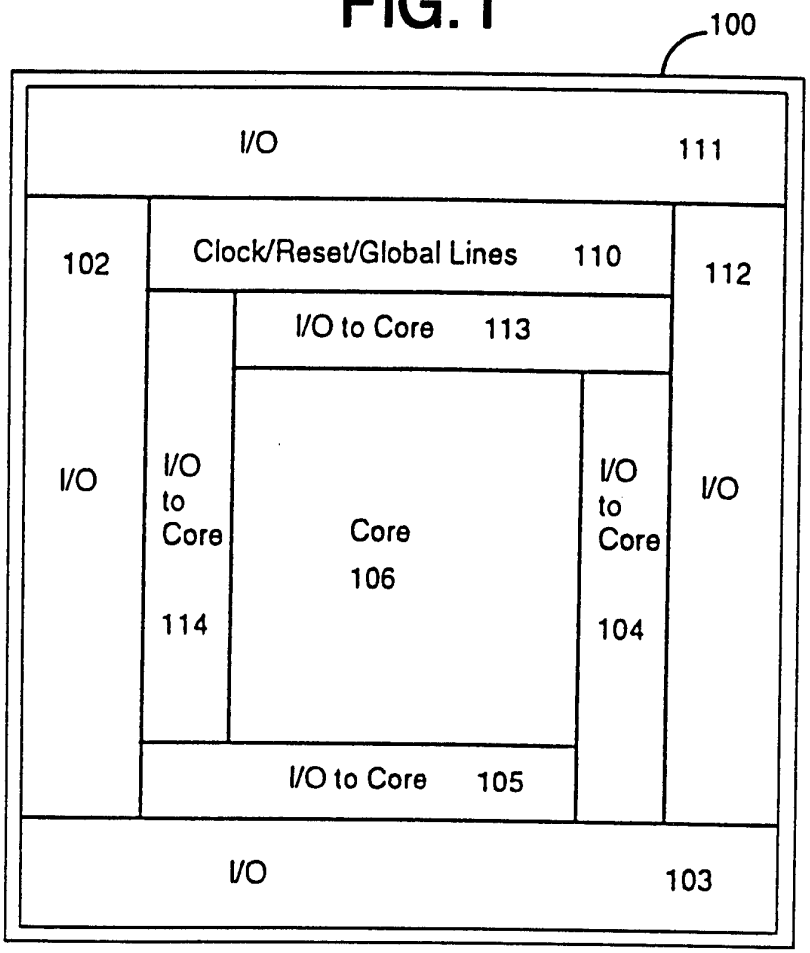
100
I/O
111
102
Clock/Reset/Global Lines
110
112
I/O to Core
113
I/O
I/O to Core
114
Core
106
I/O to Core
104
I/O
I/O to Core
105
I/O
103

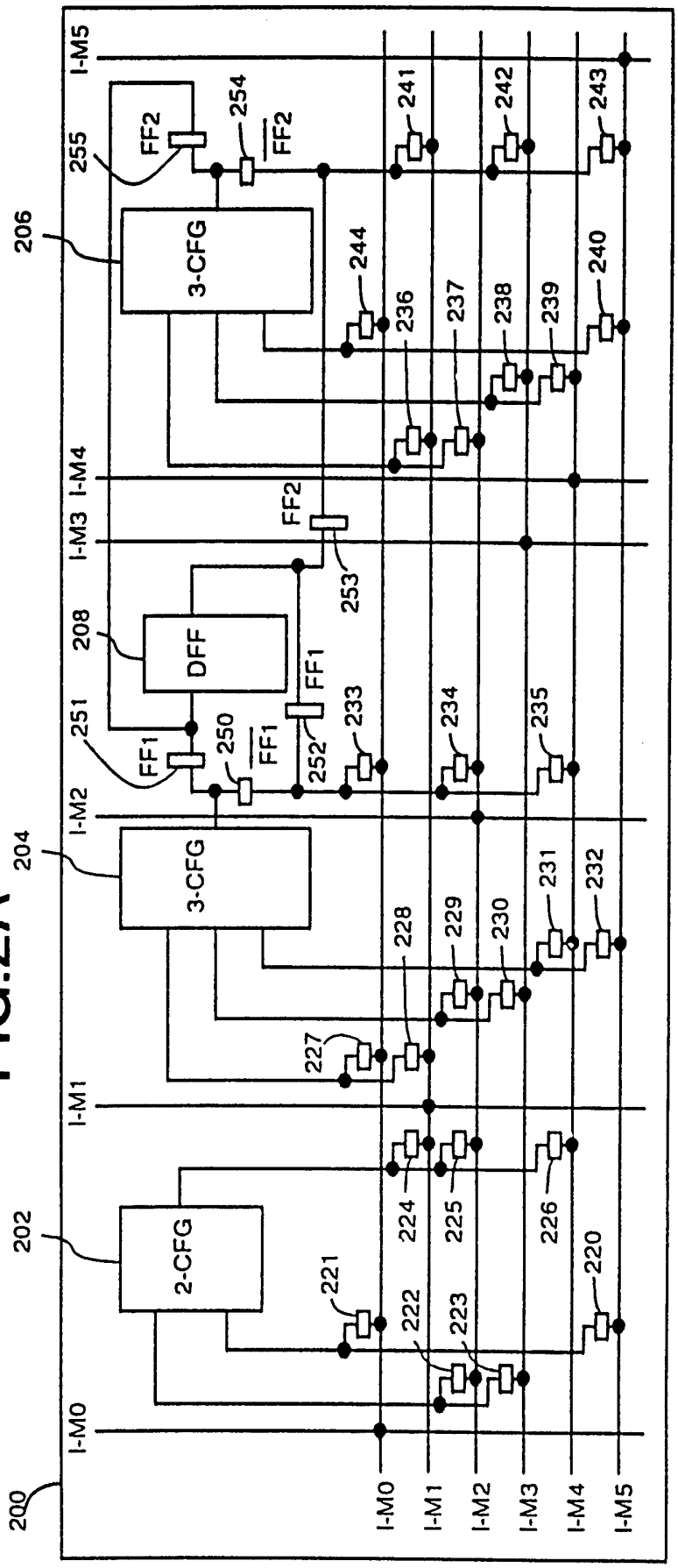
200
202
204
206
208
2-CFG
3-CFG
3-CFG
DFF
I-M0
I-M1
I-M2
I-M3
I-M4
I-M5
FF1
FF2
220
221
222
223
224
225
226
227
228
229
230
231
232
233
234
235
236
237
238
239
240
241
242
243
244
250
251
252
253
254
255

FIG.2A

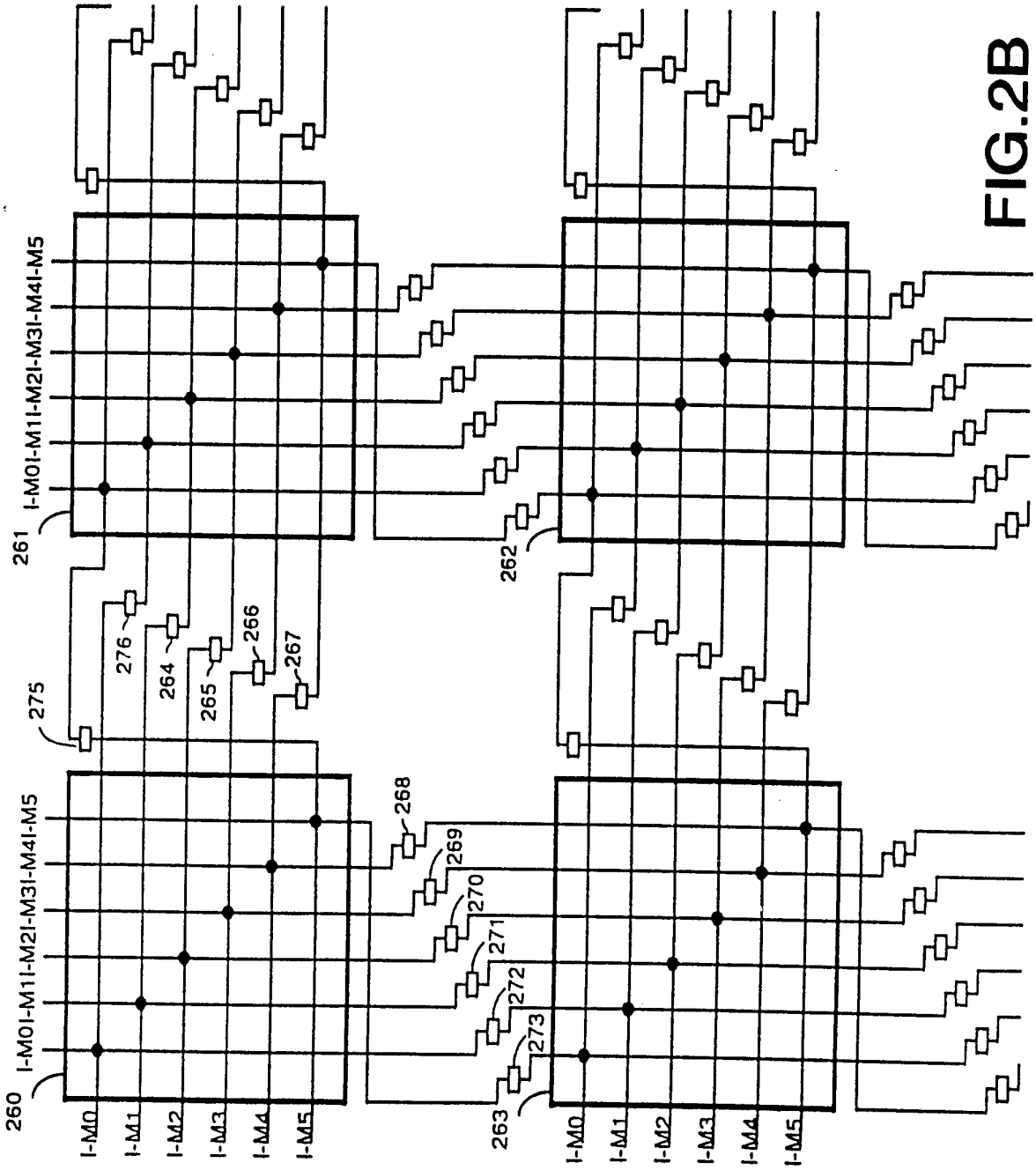
I-M0I-M1I-M2I-M3I-M4I-M5
261
262
275
276
264
265
266
267
268
269
270
271
272
273
260
263
I-M0
I-M1
I-M2
I-M3
I-M4
I-M5

FIG.2B

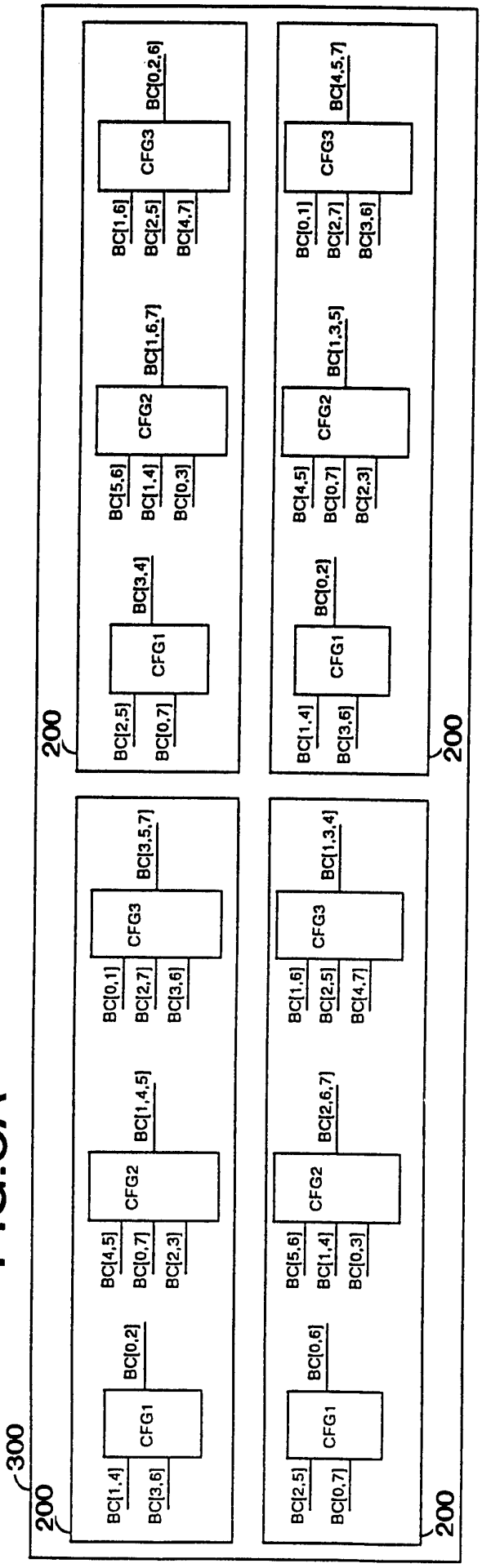
300
200
200
200
200
CFG1
CFG2
CFG3
BC[1,4]
BC[3,6]
BC[0,2]
BC[4,5]
BC[0,7]
BC[2,3]
BC[1,4,5]
BC[0,1]
BC[2,7]
BC[3,6]
BC[3,5,7]
BC[2,5]
BC[0,7]
BC[3,4]
BC[5,6]
BC[1,4]
BC[0,3]
BC[1,6,7]
BC[1,6]
BC[2,5]
BC[4,7]
BC[0,2,6]
BC[2,5]
BC[0,7]
BC[0,6]
BC[5,6]
BC[1,4]
BC[0,3]
BC[2,6,7]
BC[1,6]
BC[2,5]
BC[4,7]
BC[1,3,4]
BC[1,4]
BC[3,6]
BC[0,2]
BC[4,5]
BC[0,7]
BC[2,3]
BC[1,3,5]
BC[0,1]
BC[2,7]
BC[3,6]
BC[4,5,7]

FIG.3A

FIG.3B

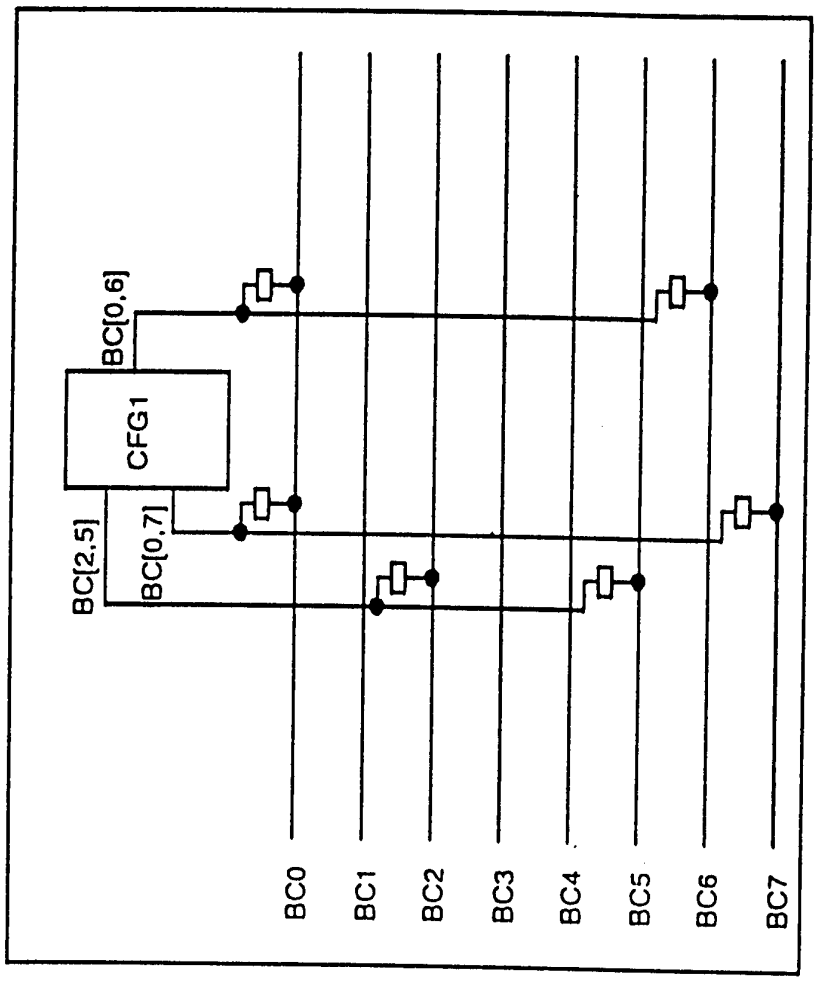

EQUALS

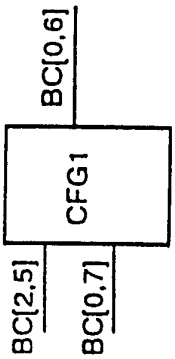

FIG.4A

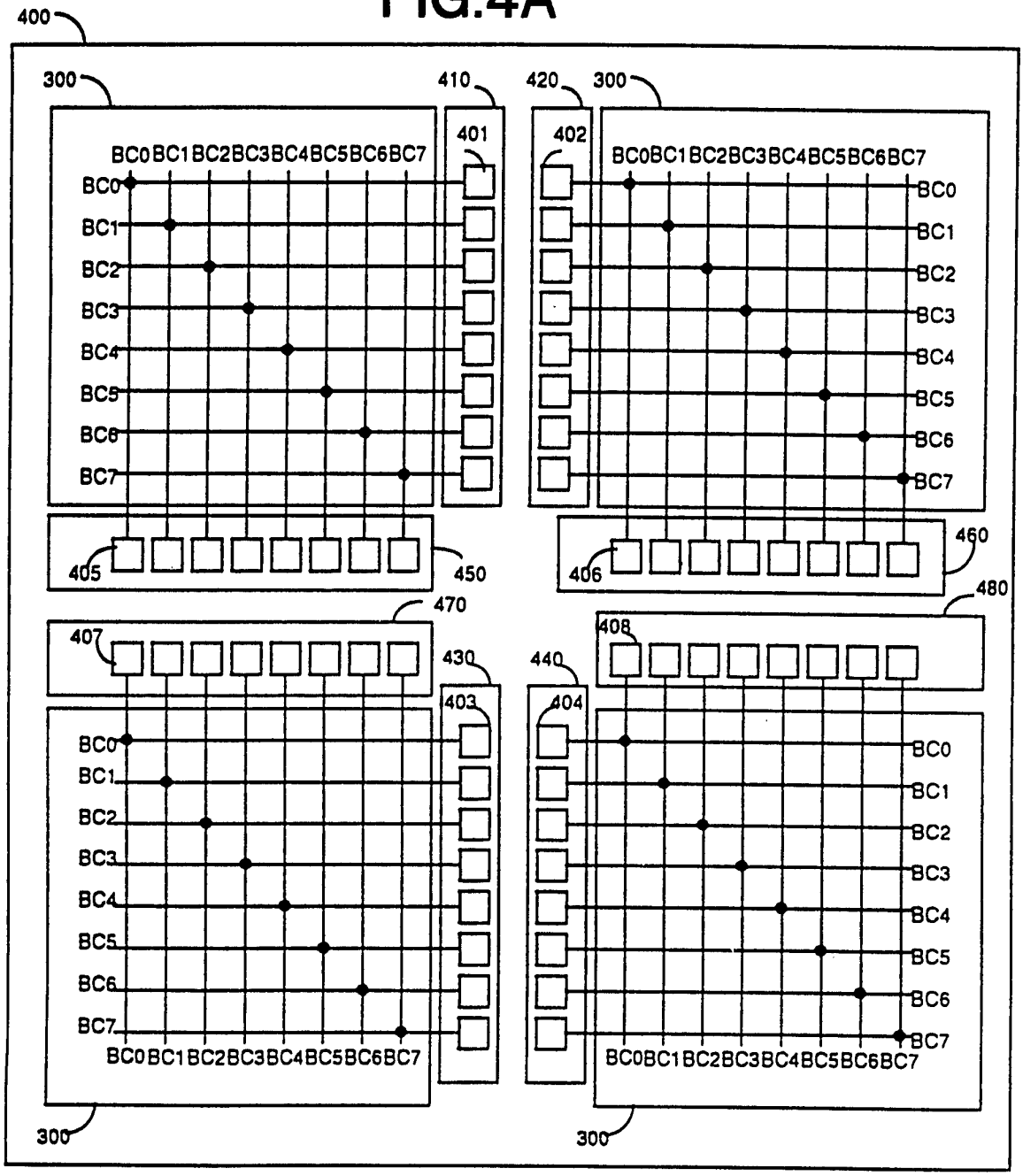
400
300
410
401
420
300
402
BC0BC1BC2BC3BC4BC5BC6BC7
BC0
BC1
BC2
BC3
BC4
BC5
BC6
BC7
405
450
406
460
480
470
407
430
408
440
403
404
300
300
: BC Tab Network

FIG.4B

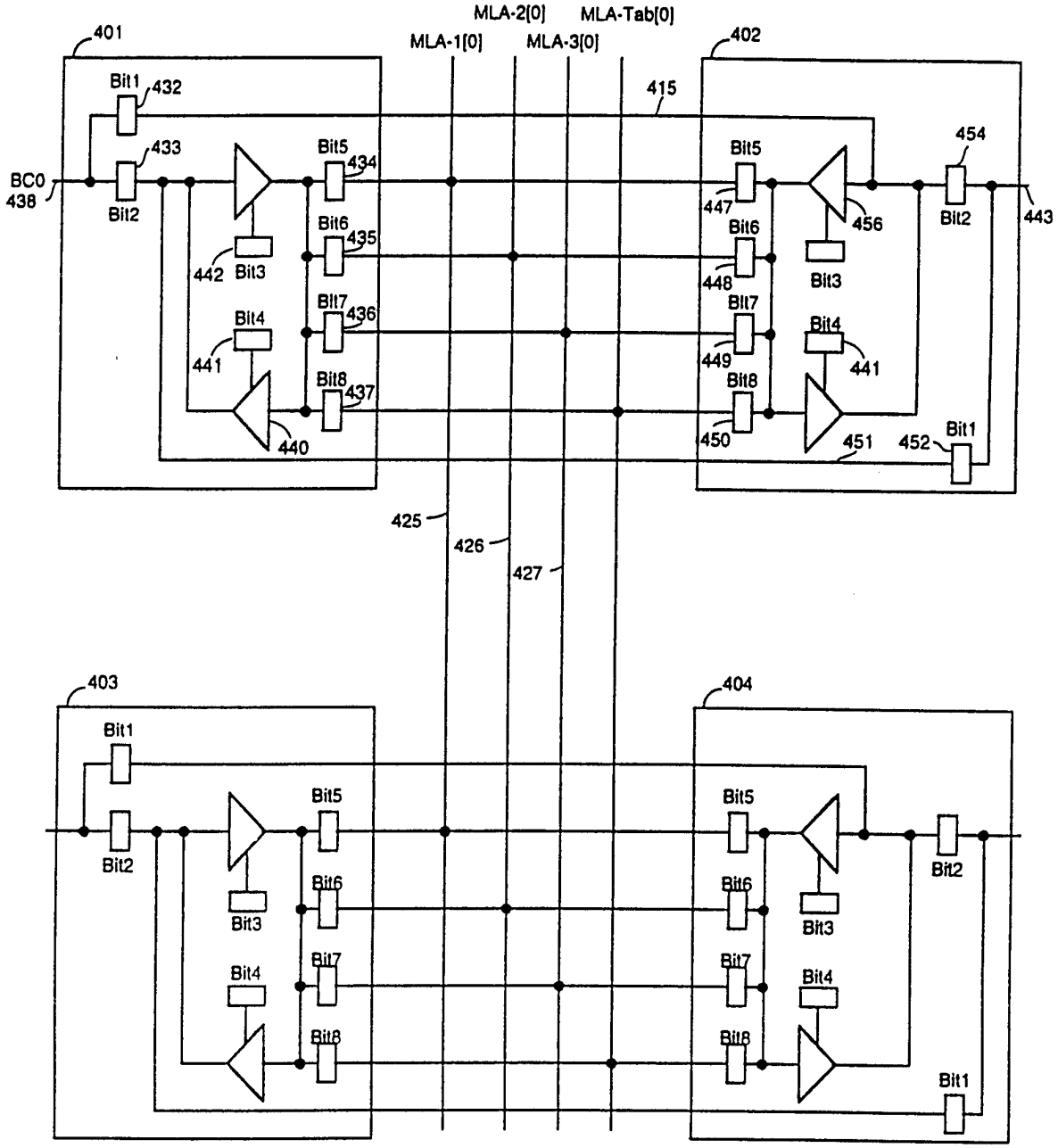
MLA-2[0]
MLA-Tab[0]
MLA-1[0]
MLA-3[0]
401
402
403
404
415
425
426
427
BC0
438
Bit1
Bit2
Bit3
Bit4
Bit5
Bit6
Bit7
Bit8
432
433
434
435
436
437
440
441
442
443
447
448
449
450
451
452
454
456

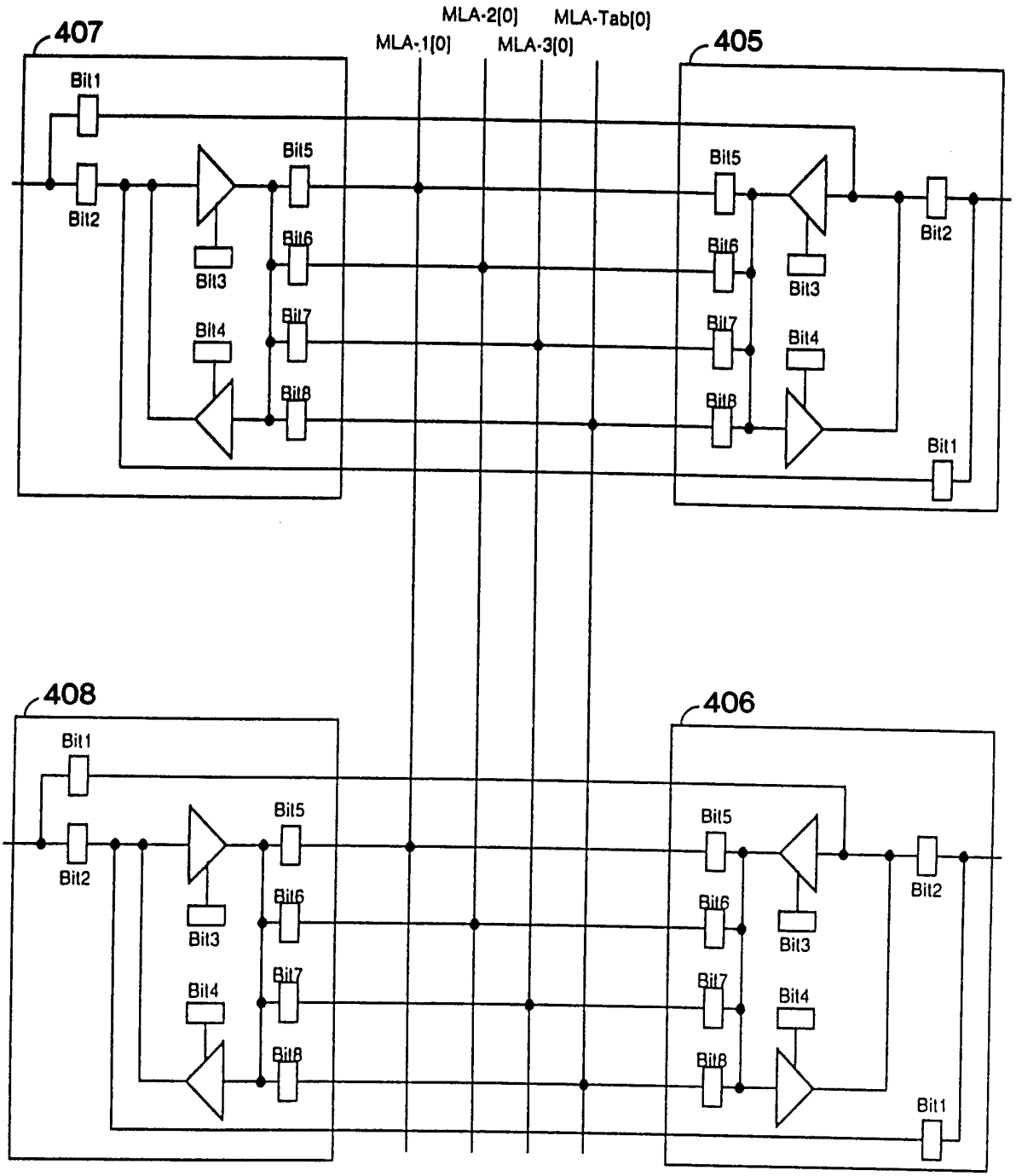
MLA-2[0]
MLA-Tab[0]
MLA-1[0]
MLA-3[0]
407
405
408
406
Bit1
Bit2
Bit3
Bit4
Bit5
Bit6
Bit7
Bit8

FIG.4C

FIG.5

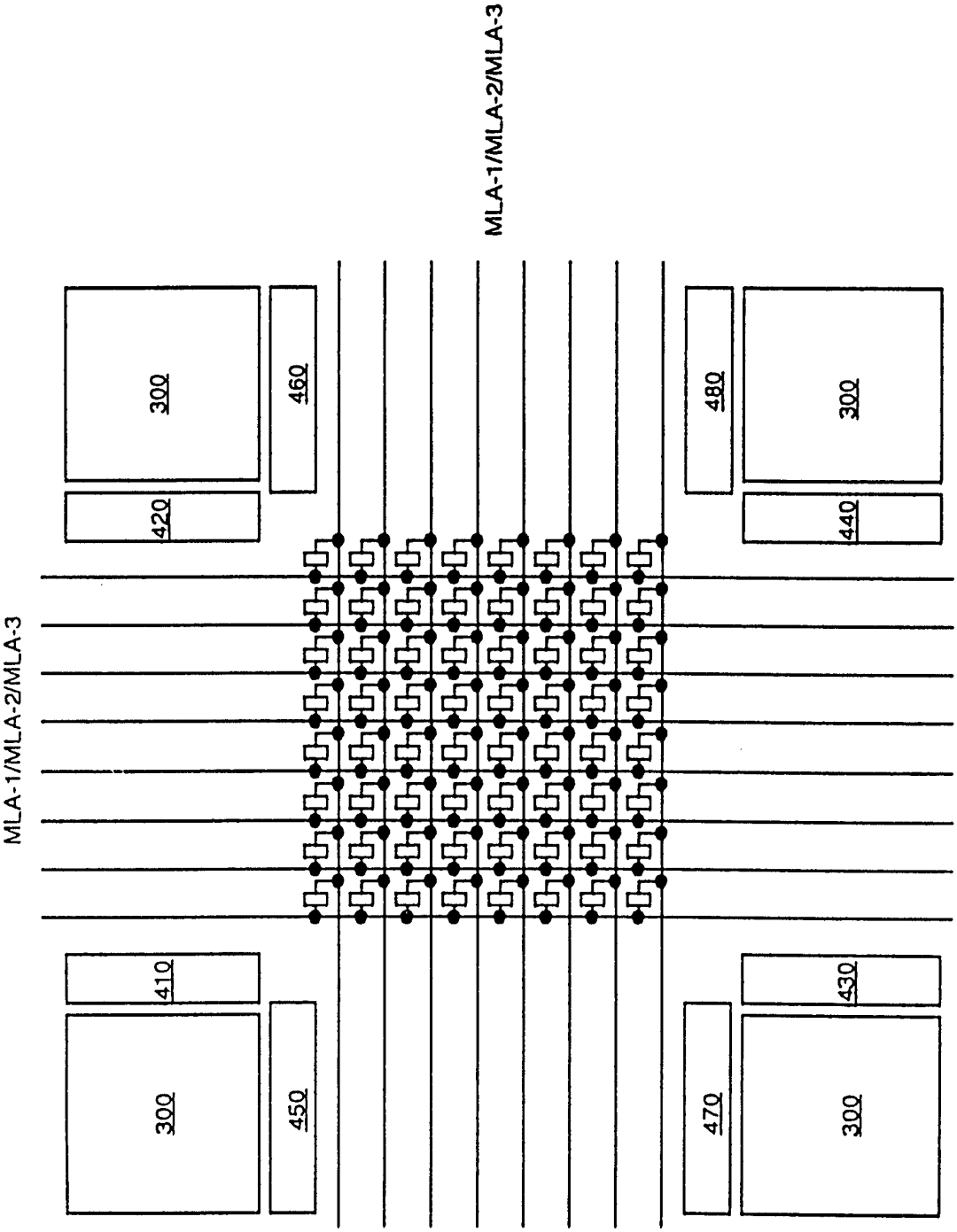
MLA-1/MLA-2/MLA-3
MLA-1/MLA-2/MLA-3
300
460
420
480
300
440
410
300
450
430
470
300

FIG.6A

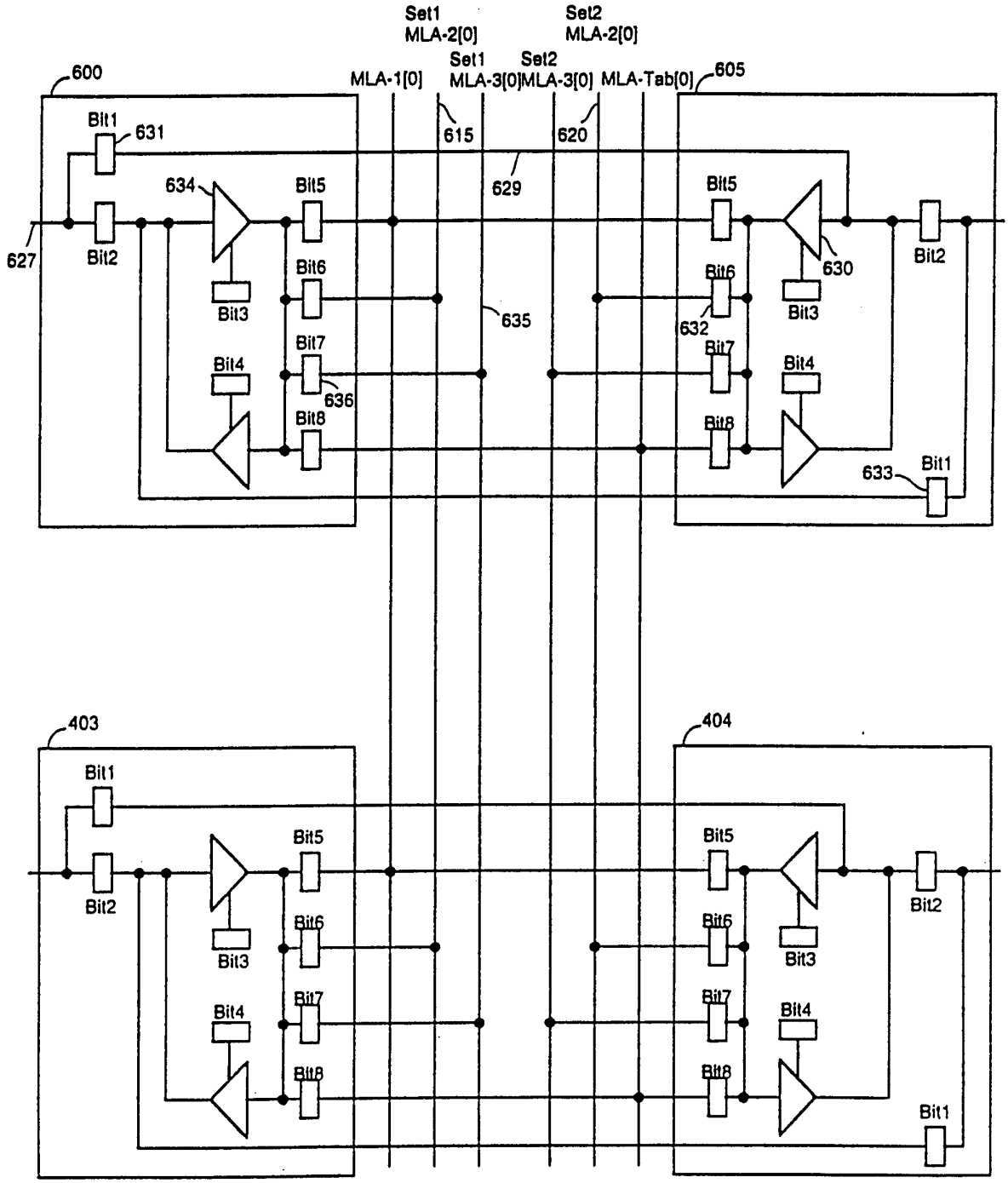
Set1
MLA-2[0]
Set2
MLA-2[0]
Set1
MLA-3[0]
Set2
MLA-3[0]
MLA-1[0]
MLA-Tab[0]
600
605
615
620
629
627
631
634
635
636
630
632
633
Bit1
Bit2
Bit3
Bit4
Bit5
Bit6
Bit7
Bit8
403
404

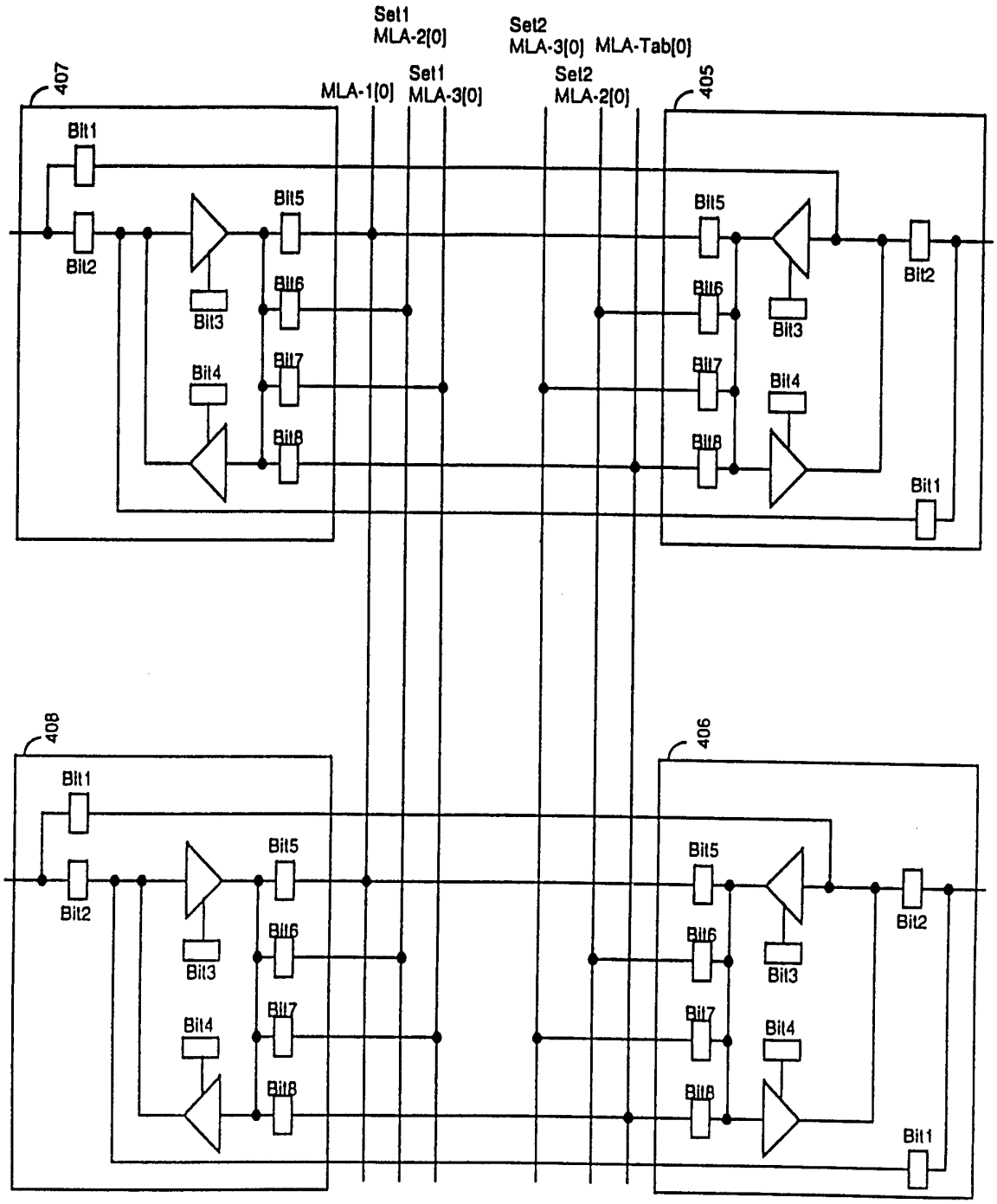
Set1
MLA-2[0]
Set2
MLA-3[0]
MLA-Tab[0]
407
MLA-1[0]
Set1
MLA-3[0]
Set2
MLA-2[0]
405
Bit1
Bit2
Bit3
Bit4
Bit5
Bit6
Bit7
Bit8
408
406

FIG.6B

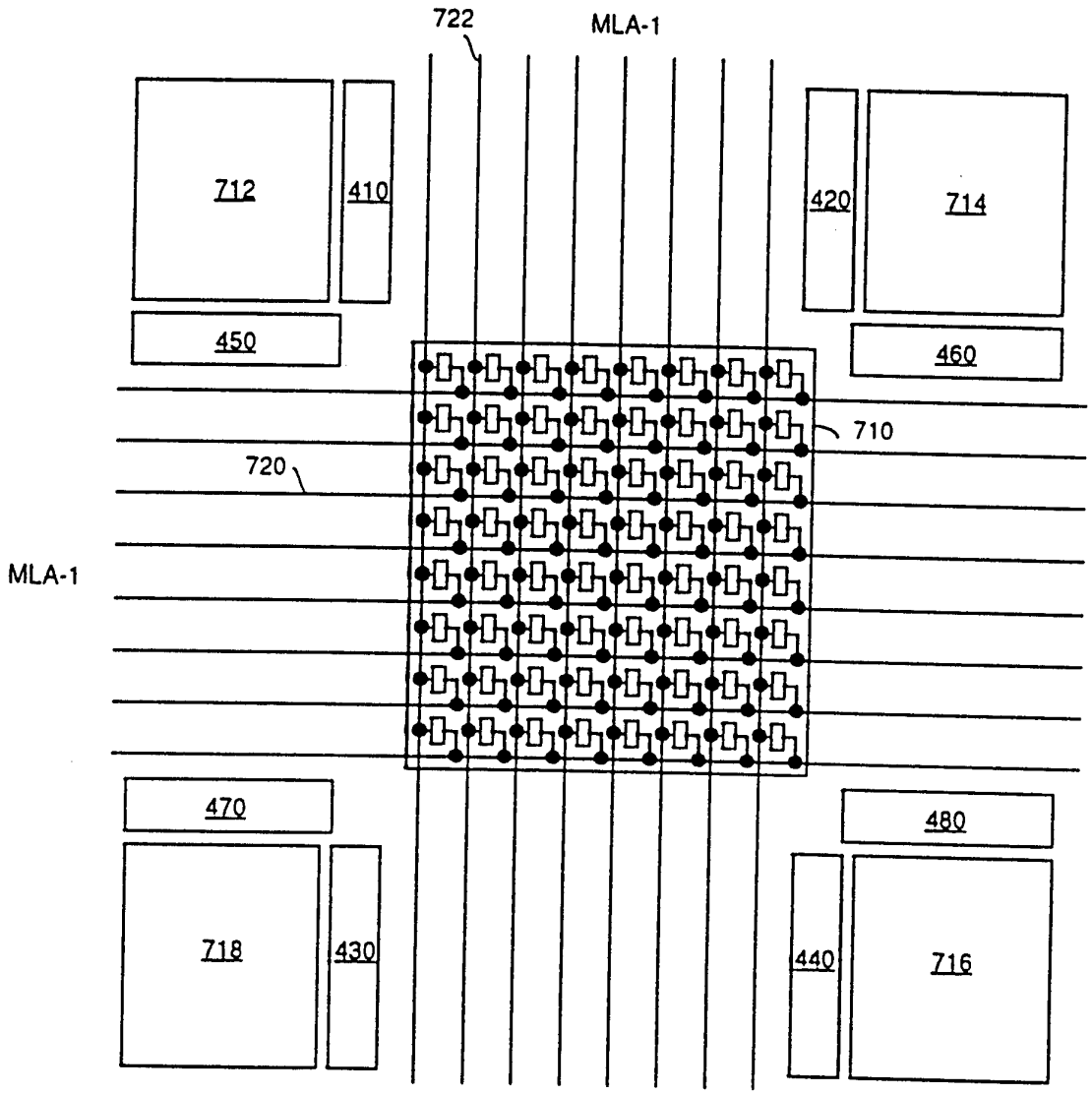
722
MLA-1
712
410
420
714
450
460
710
720
MLA-1
470
480
718
430
440
716

FIG.7A

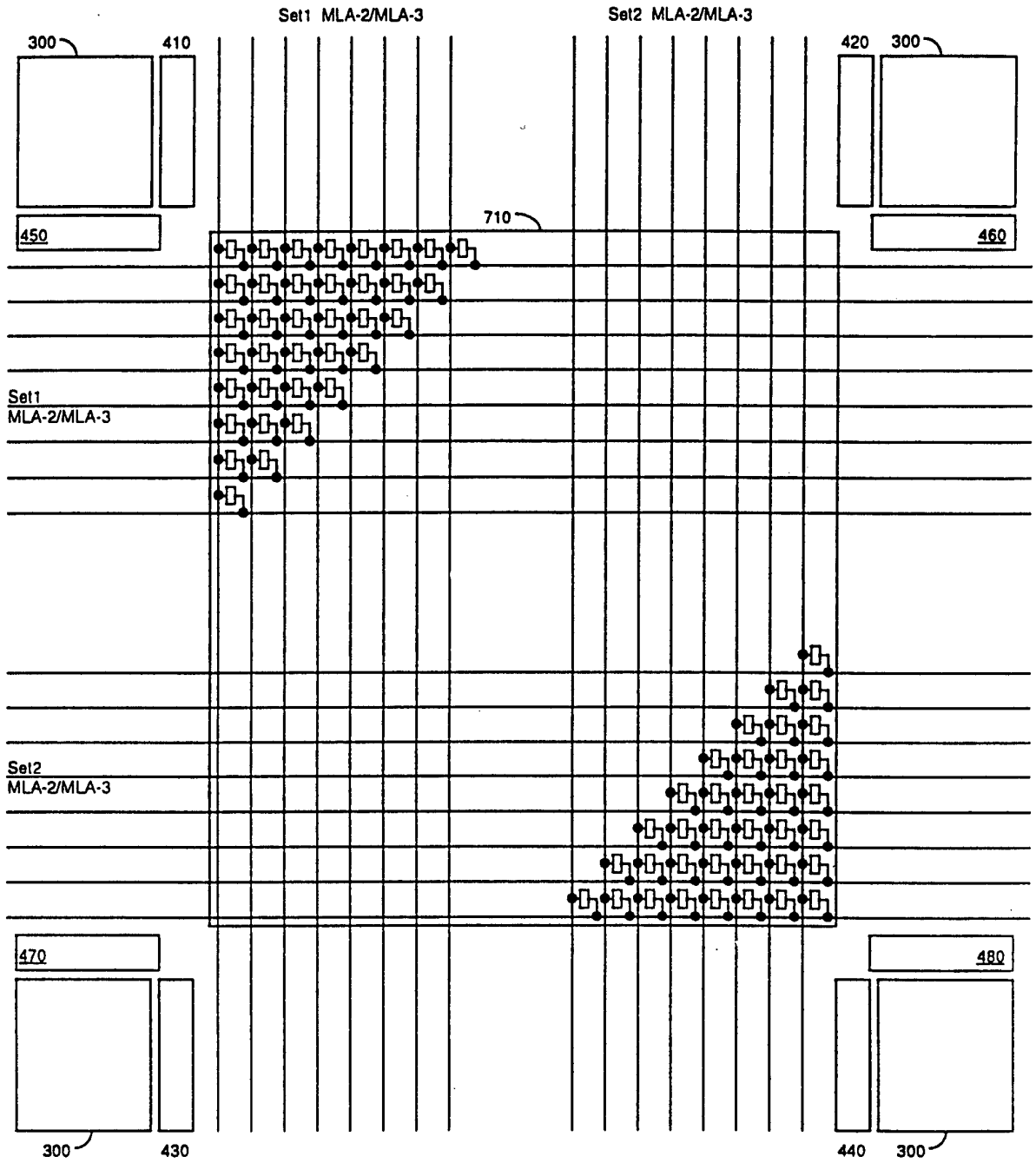
Set1 MLA-2/MLA-3
Set2 MLA-2/MLA-3
300
410
420
300
710
450
460
Set1
MLA-2/MLA-3
Set2
MLA-2/MLA-3
470
480
300
430
440
300

FIG.7B

FIG.7C

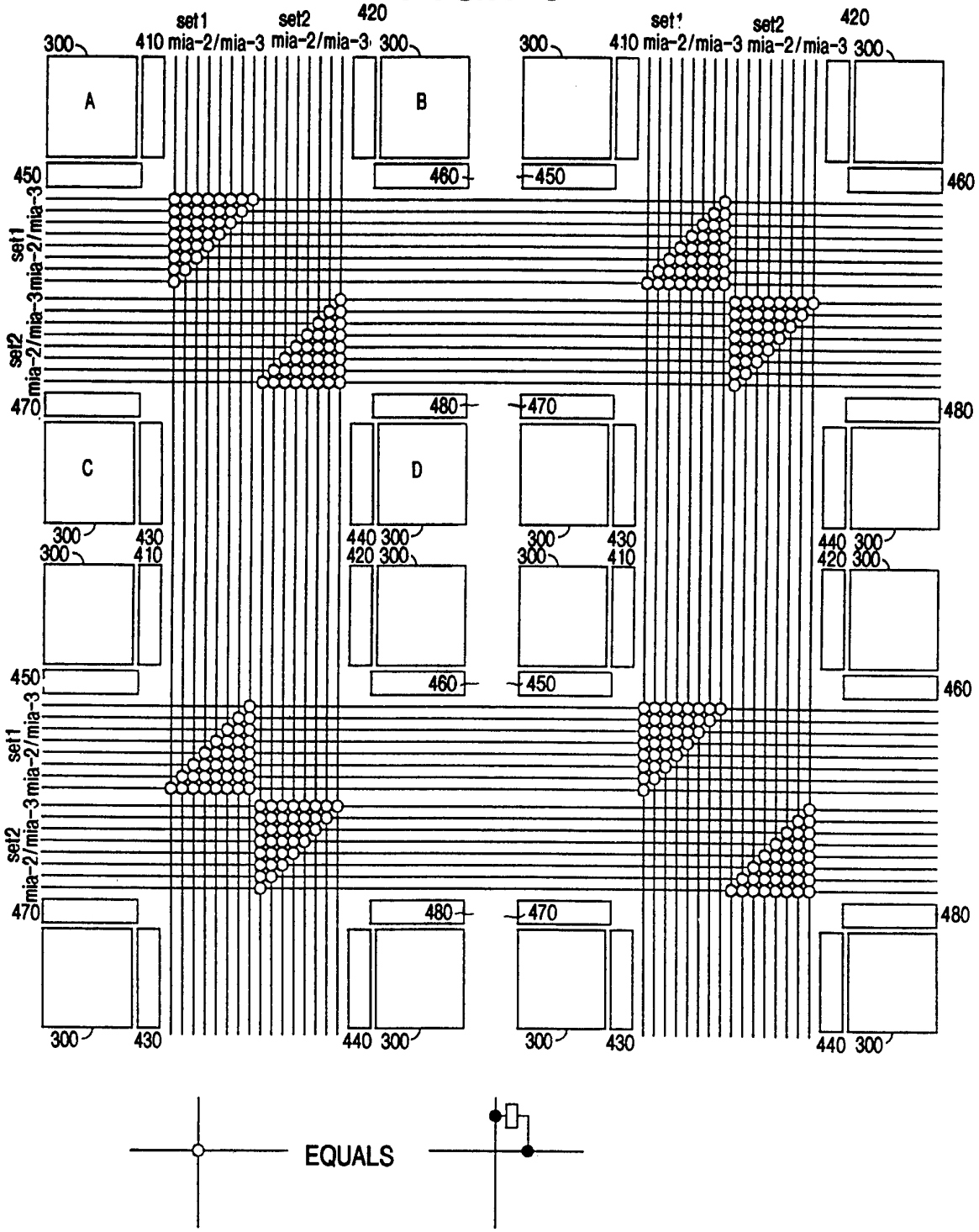
set1
set2
420
410 mia-2/mia-3
mia-2/mia-3
300
A
B
450
460
set1
mia-2/mia-3
set2
mia-2/mia-3
470
480
C
D
300
430
440
410
420
EQUALS

FIG.8A

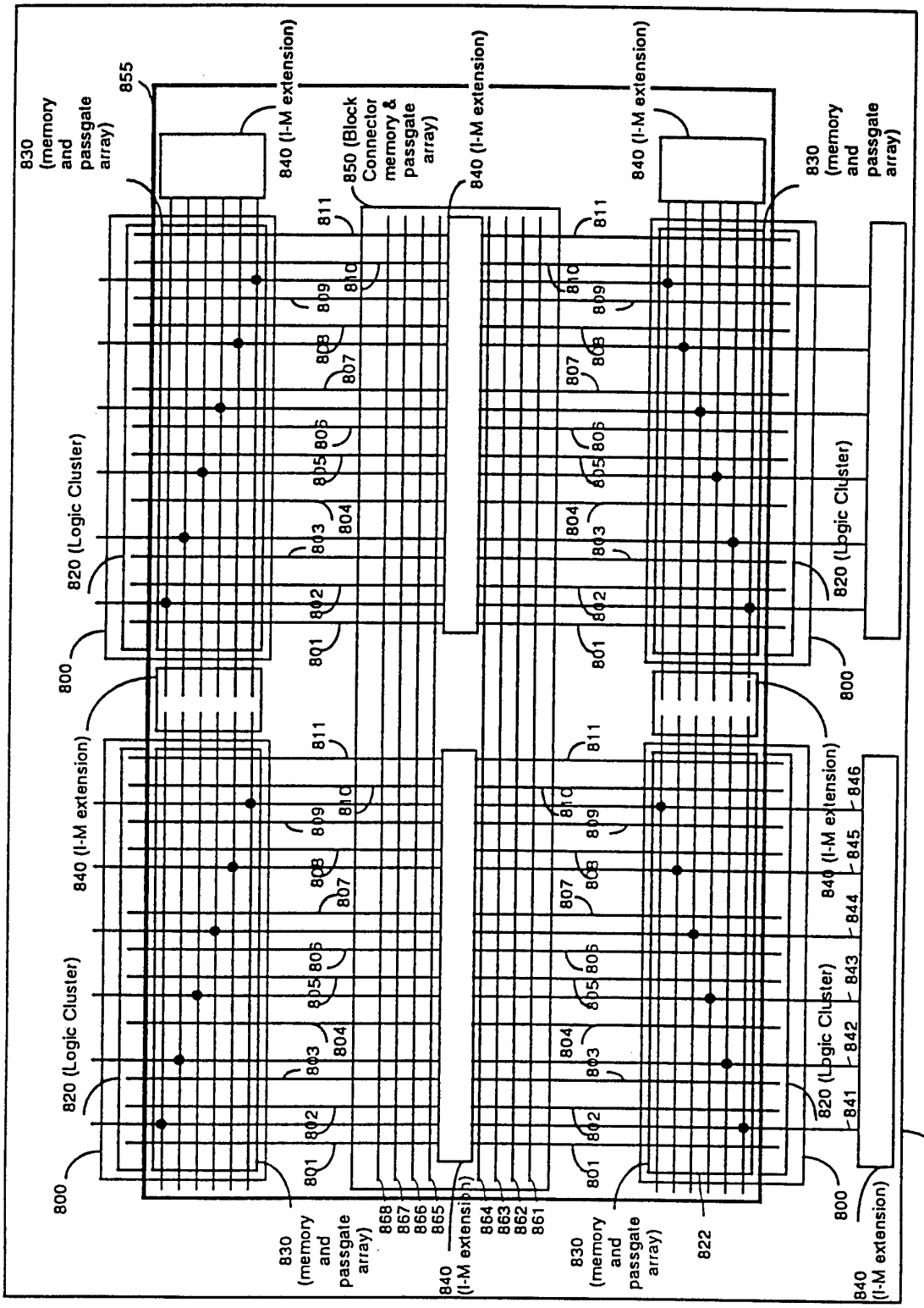
830 (memory and passgate array)
855
840 (I-M extension)
850 (Block Connector memory & passgate array)
820 (Logic Cluster)
800
811
810
809
808
807
806
805
804
803
802
801
868
867
866
865
864
863
862
861
822
841
842
843
844
845
846
860

FIG.8B

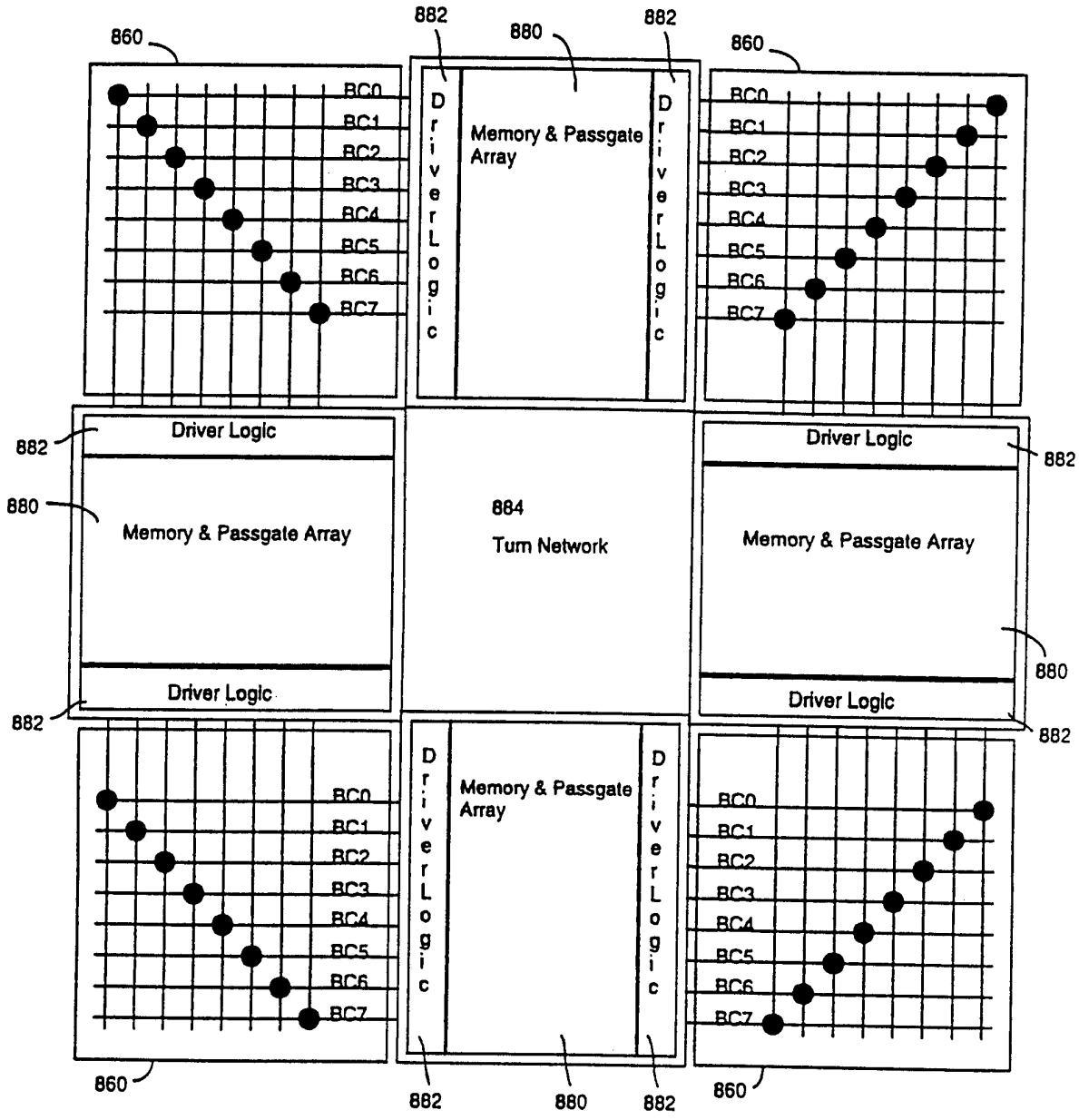
860
882
880
882
860
BC0
BC1
BC2
BC3
BC4
BC5
BC6
BC7
Driver Logic
Memory & Passgate Array
Driver Logic
882
880
882
Driver Logic
Memory & Passgate Array
Driver Logic
884
Turn Network
Driver Logic
Memory & Passgate Array
Driver Logic
882
880
882
882
Driver Logic
Memory & Passgate Array
Driver Logic
860
882
880
882
860

INTERNATIONAL SEARCH REPORT

Int onal Application No
PCT/US 96/05964

A. CLASSIFICATION OF SUBJECT MATTER
IPC 6 H03K19/177

According to International Patent Classification (IPC) or to both national classification and IPC

B. FIELDS SEARCHED

Minimum documentation searched (classification system followed by classification symbols)
IPC 6 H03K

Documentation searched other than minimum documentation to the extent that such documents are included in the fields searched

Electronic data base consulted during the international search (name of data base and, where practical, search terms used)

C. DOCUMENTS CONSIDERED TO BE RELEVANT

Category °	Citation of document, with indication, where appropriate, of the relevant passages	Relevant to claim No.
A	WO,A,95 04404 (ADVANTAGE LOGIC INC) 9 February 1995 see page 9, line 2 - page 12, line 5 see page 27, line 6 - page 29, line 23; figures 1,5A,5B,5C,6, ---	1,8,17, 24,29,34
A	WO,A,94 10754 (XILINX INC) 11 May 1994 see page 8, line 12 - page 9, line 3; figures 1-5,12-17 ---	1,8,17, 24,29,34
A	US,A,5 296 759 (SUTHERLAND JIM ET AL) 22 March 1994 see column 7, line 61 - column 8, line 31 see column 9, line 29 - line 60; figures 18,19,22,23 --- -/--	1,8,17, 24,29,34

[X] Further documents are listed in the continuation of box C.

[X] Patent family members are listed in annex.

° Special categories of cited documents :

"A" document defining the general state of the art which is not considered to be of particular relevance

"E" earlier document but published on or after the international filing date

"L" document which may throw doubts on priority claim(s) or which is cited to establish the publication date of another citation or other special reason (as specified)

"O" document referring to an oral disclosure, use, exhibition or other means

"P" document published prior to the international filing date but later than the priority date claimed

"T" later document published after the international filing date or priority date and not in conflict with the application but cited to understand the principle or theory underlying the invention

"X" document of particular relevance; the claimed invention cannot be considered novel or cannot be considered to involve an inventive step when the document is taken alone

"Y" document of particular relevance; the claimed invention cannot be considered to involve an inventive step when the document is combined with one or more other such documents, such combination being obvious to a person skilled in the art.

"&" document member of the same patent family

1

Date of the actual completion of the international search	Date of mailing of the international search report
8 August 1996	- 3. 09. 96

Name and mailing address of the ISA	Authorized officer
European Patent Office, P.B. 5818 Patentlaan 2 NL - 2280 HV Rijswijk Tel. (+31-70) 340-2040, Tx. 31 651 epo nl, Fax: (+31-70) 340-3016	Blaas, D-L

Form PCT/ISA/210 (second sheet) (July 1992)

INTERNATIONAL SEARCH REPORT

Inte. ɔnal Application No
PCT/US 96/05964

C.(Continuation) DOCUMENTS CONSIDERED TO BE RELEVANT

Category °	Citation of document, with indication, where appropriate, of the relevant passages	Relevant to claim No.
A	INTERNATIONAL SYMPOSIUM ON CIRCUITS AND SYSTEMS. (ISCAS) VLSI, LONDON, MAY 30 - JUNE 2, 1994, vol. 4 OF 6, 30 May 1994, INSTITUTE OF ELECTRICAL AND ELECTRONICS ENGINEERS, pages 239-242, XP000493185 PING-TSUNG WANG ET AL: "A HIGH PERFORMANCE FPGA WITH HIERARCHICAL INTERCONNECTION STRUCTURE" see the whole document ---	1,8,17, 24,29,34
A	US,A,5 204 556 (SHANKAR KAPIL) 20 April 1993 -----	

1

INTERNATIONAL SEARCH REPORT

information on patent family members

Inte onal Application No
PCT/US 96/05964

Patent document cited in search report	Publication date	Patent family member(s)		Publication date
WO-A-9504404	09-02-95	US-A-	5457410	10-10-95
		AU-B-	7356294	28-02-95
		EP-A-	0712548	22-05-96
WO-A-9410754	11-05-94	EP-A-	0669056	30-08-95
		JP-T-	8503111	02-04-96
		US-A-	5469003	21-11-95
		US-A-	5500609	19-03-96
		US-A-	5528176	18-06-96
US-A-5296759	22-03-94	US-A-	5338984	16-08-94
		US-A-	5317209	31-05-94
		US-A-	5329180	12-07-94
		US-A-	5341040	23-08-94
		US-A-	5319255	07-06-94
		US-A-	5336950	09-08-94
		US-A-	5298805	29-03-94
		US-A-	5323069	21-06-94
US-A-5204556	20-04-93	DE-T-	583361	16-03-95
		EP-A-	0583361	23-02-94
		JP-T-	6510403	17-11-94
		WO-A-	9220159	12-11-92