No. 742,035. PATENTED OCT. 20, 1903.

T. J. JOHNSON.

PAPER FILE AND INDEX.

APPLICATION FILED OCT. 1, 1902.

NO MODEL. 3 SHEETS—SHEET 1.

Fig. 1

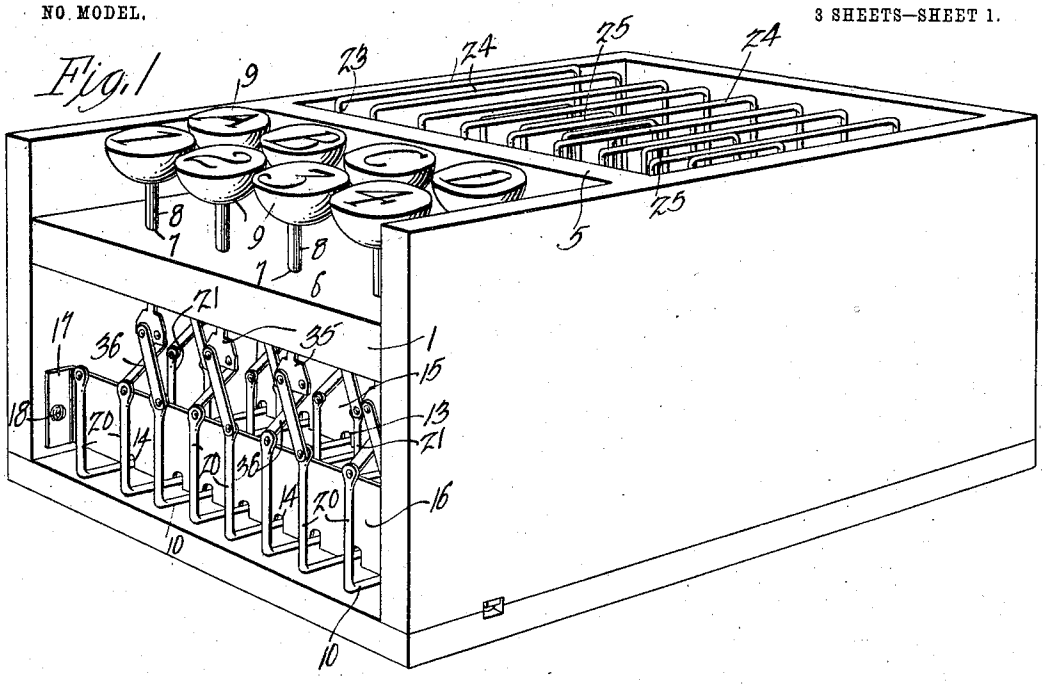

Fig. 2

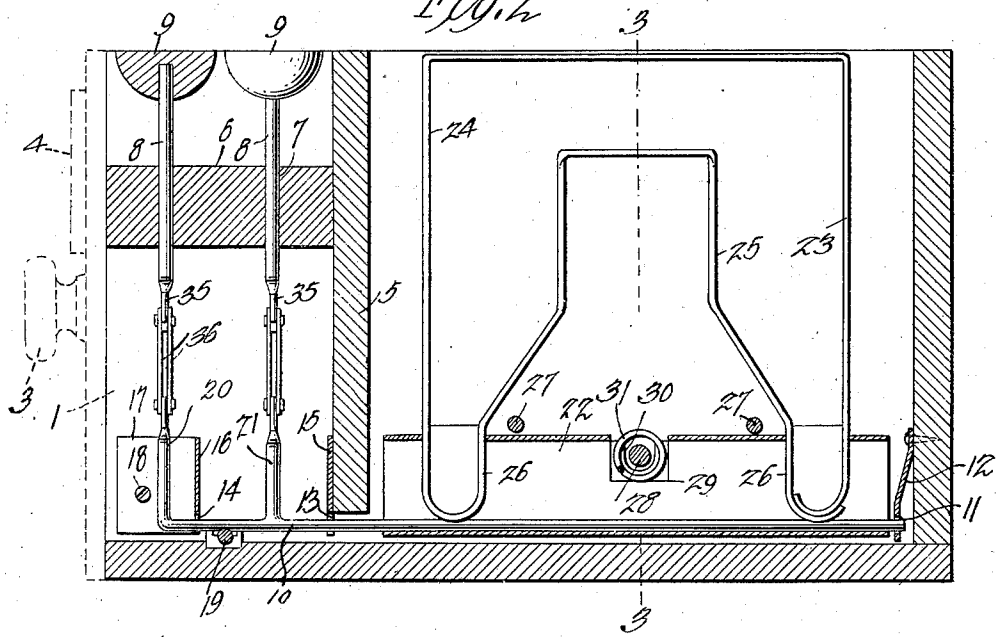

Witnesses
E. F. Stewart
Wm. Bagger

T. J. JOHNSON, Inventor.
by C. A. Snow & Co
Attorneys

THE NORRIS PETERS CO., PHOTO-LITHO., WASHINGTON, D. C.

No. 742,035. PATENTED OCT. 20, 1903.

T. J. JOHNSON.

PAPER FILE AND INDEX.

APPLICATION FILED OCT. 1, 1902.

NO MODEL. 3 SHEETS—SHEET 2.

Fig. 3.

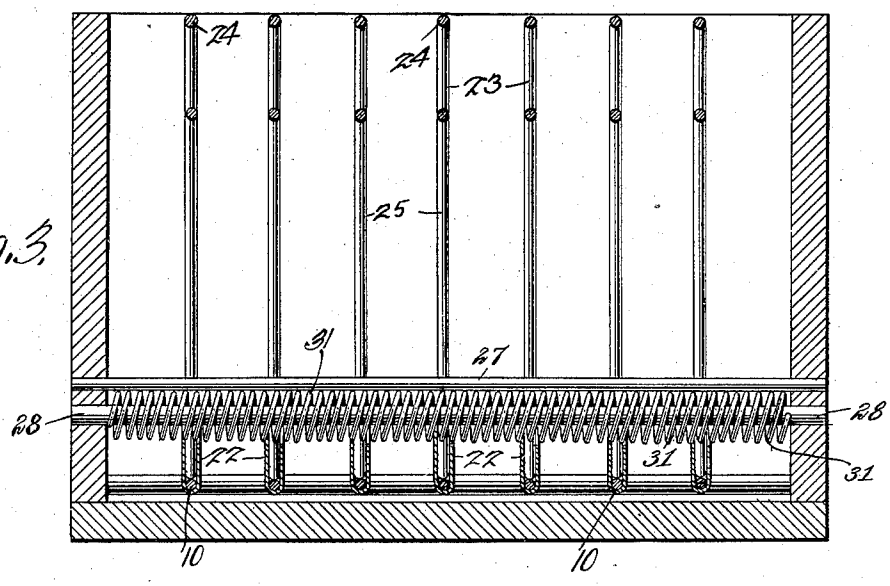

Fig. 5.

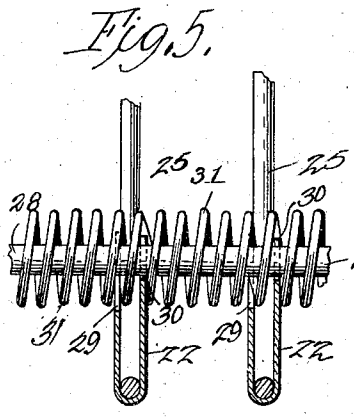

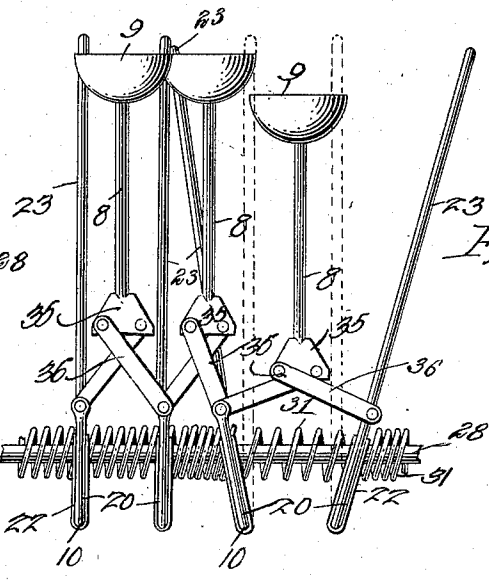

Fig. 4.

Witnesses

E. F. Stewart

Wm. Bagger

T. J. Johnson, Inventor.

by C. A. Snow & Co.

Attorneys

THE NORRIS PETERS CO., PHOTO-LITHO., WASHINGTON, D. C.

No. 742,035. PATENTED OCT. 20, 1903.

T. J. JOHNSON.

PAPER FILE AND INDEX.

APPLICATION FILED OCT. 1, 1902.

NO MODEL. 3 SHEETS—SHEET 3.

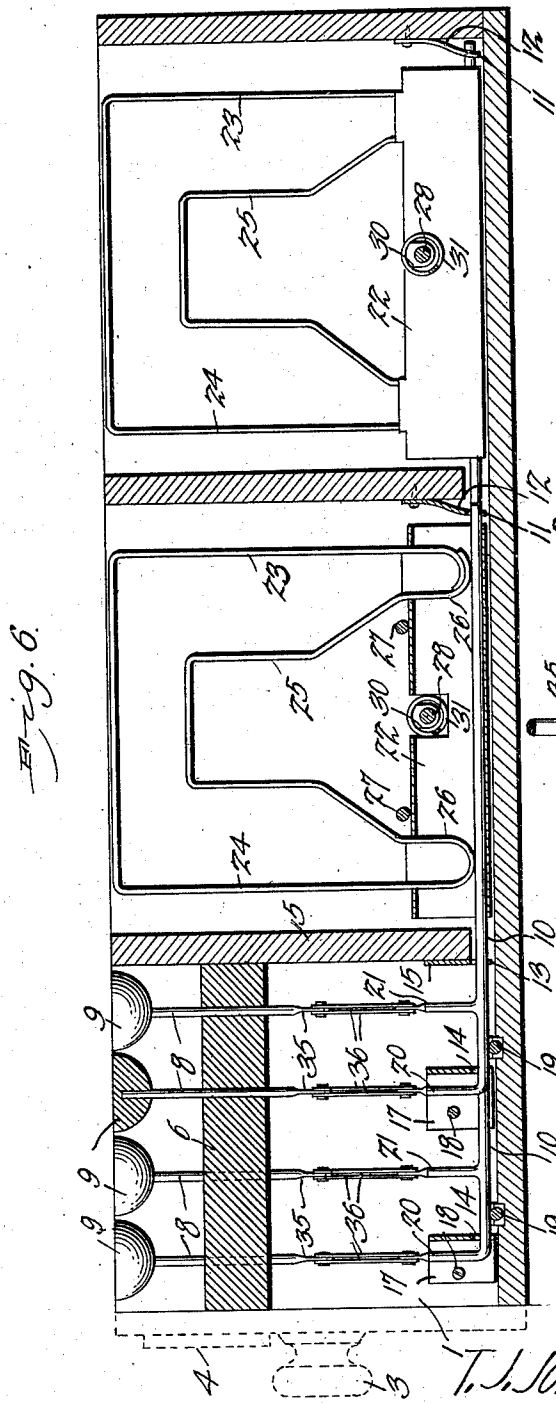

Fig. 6.

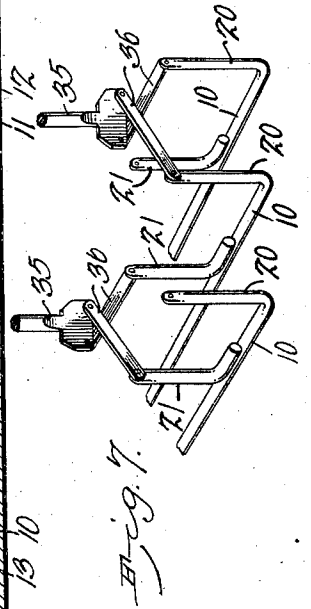

Fig. 7.

Witnesses,
E. F. Stewart
Wm. Bagger

T. J. JOHNSON, Inventor.
by C. A. Snow & Co.
Attorneys

THE NORRIS PETERS CO., PHOTO-LITHO., WASHINGTON, D. C.

No. 742,035. Patented October 20, 1903.

UNITED STATES PATENT OFFICE.

THOMAS J. JOHNSON, OF NORMAN, OKLAHOMA TERRITORY.

PAPER FILE AND INDEX.

SPECIFICATION forming part of Letters Patent No. 742,035, dated October 20, 1903.

Application filed October 1, 1902. Serial No. 125,535. (No model.)

To all whom it may concern:

Be it known that I, THOMAS J. JOHNSON, a citizen of the United States, residing at Norman, in the county of Cleveland and Territory of Oklahoma, have invented a new and useful Paper File and Index, of which the following is a specification.

This invention relates to that class of devices which are used for the purpose of filing away papers, cards, checks, and the like and which are provided with an indexing means whereby any particular card or paper desired may at once be located.

My invention has special reference to that class of filing and indexing devices which in the form of drawers may be mounted in a suitable cabinet, the said drawers being so proportioned and subdivided into a suitable number of compartments to fit them especially for any purpose for which they may be designed.

The object of this invention is to provide a device of this class which shall possess superior advantages in point of simplicity, durability, and general efficiency; and with these and other ends in view the invention consists in the improved construction, arrangement, and combination of parts, which will be hereinafter fully described, and particularly pointed out in the claims.

In the accompanying drawings, Figure 1 is a perspective view illustrating my invention as applied to a cabinet-drawer the front of which has been removed in order to expose the interior construction. Fig. 2 is a longitudinal sectional view of the same. Fig. 3 is a transverse sectional view taken on the line 3 3, Fig. 2. Fig. 4 is a detail view showing in elevation a portion of the operating parts of the device, one of the keys being shown depressed, so as to spread the side walls of the compartment controlled by said key to operated position. Fig. 5 is a sectional detail view, on a larger scale, taken through several of the rock-shafts and related parts. Fig. 6 is a longitudinal sectional view illustrating a modification whereby the capacity of the device is increased. Fig. 7 is a perspective detail view showing the front ends of several rock-shafts, the cranks upon the same, the vertically-movable stems or slides, and the connecting links or toggles.

Corresponding parts in the several figures are indicated by similar characters of reference.

At the outset I desire to state that the drawings above referred to are not to be understood as showing the proper shape, proportions, or general appearance of the device. Indeed, the general shape and outline may be indefinitely varied, so as to adapt the device for the various purposes for which it may be intended. In some instances long and narrow compartments will be called for. In other instances short and wide compartments may be demanded, and it will be obvious at a glance that by properly changing the proportions my improved cabinet may be adapted to a great variety of uses.

The individual drawer, which may be constructed of thin and light material when so desired, is designated 1. In Fig. 1 the front of this drawer has been removed in order to expose the interior construction. In Fig. 2 it has been shown in dotted lines and provided with a knob 3 and a card-holder 4, both of which, however, are common in the art and not herein claimed.

The drawer or casing 1 is provided with a transverse partition 5, which does not, however, extend quite to the bottom. Between the front of the wall and this transverse vertical partition 5 is mounted a horizontal partition 6, which is provided with a plurality of perforations 7, forming bearings for the vertically-sliding stems 8 of the keys 9, by means of which the device is operated, as will be hereinafter described.

10 10 designate a plurality of rock-shafts, the rear ends of which have bearings consisting of perforations 11 in the lower part of the metallic strip 12, which is secured to the rear wall of the box or casing and which is bent, as shown, so that its lower edge shall project sufficiently from the said back to receive the rear ends of the rock-shafts which are journaled therein. The front ends of said rock-shafts are supported in slots 13 and 14 in a pair of transverse metallic strips or bars 15 and 16, the former of which is preferably secured at the lower end of the transverse partition 5, while the strip 16 is bent so as to form brackets 17 at the ends thereof, said brackets fitting against the sides of the box

or casing, to which they may be secured by screws 18 or in any other suitable and convenient manner. The front ends of the rock-shafts 10 are supported in their respective slots or bearings 13 and 14 by means of a rod or wire 19, extending transversely below the rock-shafts and secured at its ends to the under edges of the sides of the drawer or casing. The rock-shafts 10 are provided at their front ends with upturned arms or cranks 20, which are disposed in front of the division-strip 14. Auxiliary arms or cranks 21 extend upwardly from said rock-shafts at points between the strips 15 and 16. This exact arrangement or disposition of the parts may not be found absolutely indispensable, but is described as showing a preferred construction whereby the operative parts of the device are separated and prevented from interfering with each other. It should be observed that an operating-key 9 is provided for each of the rock-shafts, the said operating-keys being disposed alternately between the cranks with which they are to be connected, as will be hereinafter described.

Each of the rock-shafts 10 is provided with a pocket 22, which may consist simply of a strip of sheet metal bent or folded to form a U-shaped receptacle, in the bottom of which the rock-shaft is secured by means of solder or in any convenient manner. In the pockets thus formed are secured the lower ends of the partitions 23, which may be constructed of wire, as shown clearly in Fig. 3 of the drawings, by simply bending the said wire so as to form an outer frame 24, an inner frame 25, and downwardly-extending loops 26, which lie within the pocket 22 and which may be there secured in any suitable manner—for instance, by bending or clenching the upper edges of the strip constituting the said U-shaped pocket toward each other, thereby clamping and securing the downwardly-extended loops 26. Additional fastening means, such as solder, may of course be used when desired. It will also be understood that it is by no means essential that these partition-walls should be formed of wire. They may be formed of thin metallic plates or of heavy paper, such as manila-stock, or of any other suitable material and in any suitable manner. Likewise may the mode of connecting said partitions with the pockets 22 or with the rock-shafts be altered or modified to any extent within the scope of my invention when so desired.

Transverse rods 27 connect the sides of the drawer or casing above the upper edges of the pockets 22. These rods practically form the bottom of the series of compartments formed by the partitions 23, and they serve to retain the papers that may be placed in said compartments evenly and level, so as to facilitate the examination and removal thereof. They also serve generally to prevent displacement of the parts of the device. An additional transverse rod 28 is disposed below the upper edges of the pockets 22, which latter are provided with recesses 29 and 30 for the accommodation of said rod. The recesses 29 are larger than the recesses 30, so as to easily accommodate a spring 31, which is coiled upon the rod 28. The recesses 30, however, are somewhat smaller in size, so that the adjacent coils of the helical spring 31 will impinge upon opposite sides thereof and serve to retain the pocket member against which they impinge normally in a raised or vertical position. It is evident by this construction that when two adjacent pocket members are forced apart the coils of the spring lying between said pocket members will be expanded, while all the remaining coils of the said spring will be compressed. This is the abnormal position assumed when the device is operated by means of the keys, as will be presently described. When pressure upon the key which is being operated ceases, the parts will be restored by the action of the single coiled spring to their normal position without regard to which of the keys is being operated for the purpose of spreading apart the side walls of the compartment controlled thereby. The number of keys, as has already been stated, will correspond with the number of compartments formed within the drawer or casing. In the example illustrated in the drawings these keys have been arranged in two rows adapted for connection, respectively, with the forward cranks 20 and with the cranks 21, disposed between the strips 15 and 16. The keys 9 are disposed above and between the rock-shafts 10, and the said keys are, moreover, disposed alternately in alinement with the front and rear cranks 20 and 21. It is obvious that if only a single row should be used the keys would require to be made correspondingly smaller or the compartments fewer and larger. It will also be evident that when it shall be desirous to increase the number of compartments additional rows of keys and additional rock-shafts with their related parts may be introduced by constructing two rows of compartments, one in front of the other, and extending the rock-shafts of the rear row between those of the front row sufficiently to admit of proper connection with additional rows of keys disposed at the forward end of the drawer, as illustrated in Fig. 6 of the drawings.

Each of the stems 8 is provided at its lower end with a plate 35, the front and rear sides of which are connected by links or toggles 36 with the upper ends of the adjacent crank-arms 20 and 21, as the case may be. It will be seen that the stems of the front row of keys are thus connected with the front cranks 20, while the rear cranks 21 are similarly connected with the lower ends of the stems of the rear row of keys. It will be further noticed that the links or toggles 36 are crossed, thus enabling them to "spread" more readily and increasing the leverage derived from

the vertically-sliding movement of the stems 8, which materially assists in the operating of the partitions, especially when the latter are placed closely together to form small compartments. Now by depressing any one of the keys, the upper ends of which, as shown in Fig. 1, are to be inscribed with letters or characters referring to the compartments controlled thereby, the links or toggles 36 at the lower end of the stem of such key will spread apart the cranks of the rock-shafts controlled thereby against the tension of the spring 31, thus spreading apart the upper ends of the partitions forming the walls of the compartment controlled by said key and enabling papers, cards, or the like to be conveniently filed in or withdrawn from said compartment. As soon as the pressure upon the key is withdrawn the action of the spring 31 will instantly restore the parts to normal position.

It will be observed that the keys 9 of my improved device are utilized not only for the purpose of operating the rock-shafts and the intermediate mechanism whereby the compartments of the device are opened or rendered accessible, but that they perform another important function in serving for the purpose of indexing the said compartments, thus enabling any desired compartment to be quickly and conveniently found, and not only found, but also opened by a simple downward pressure upon the appropriate key. It is obvious that the keys may be indexed either alphabetically, numerically, or in any other desired way, whereby the compartments controlled thereby may be readily and surely identified. This I consider a very important feature of my invention, and it greatly increases the value of the device as a time-saving, convenient, and easily-manipulated article of office furniture.

I desire it to be understood that while I have in the foregoing described a simple and preferred form of my invention I do not limit myself as regards the detailed construction thereof, but reserve the right to any changes and modifications that lie within the scope of my invention and which may be resorted to without detracting from the utility of the same.

Having thus described my invention, what I claim is—

1. In a device of the class described, a plurality of rock-shafts, partitions connected with said rock-shafts, cranks formed upon the latter, slidable keys disposed intermediate the rock-shafts, and toggles connecting the stem of each key with the cranks of adjacent rock-shafts.

2. In a device of the class described, a plurality of rock-shafts supporting partitions, operating-slides disposed intermediate the rock-shafts, and means connecting each slide with the pair of rock-shafts adjacent thereto.

3. In a device of the class described, a plurality of rock-shafts supporting partitions and having cranks formed thereon, slidable keys having flexible connection with said cranks, and means for supporting the partitions supported upon the rock-shafts in an upright position, and for restoring them to such upright position when spread apart at their upper edges by the operating means provided for the purpose.

4. In a device of the class described, a plurality of rock-shafts, pockets connected therewith, partition-walls engaging and secured within said pockets, spring means for retaining the said partition-walls normally in an upright position, cranks at the front ends of the rock-shafts, vertically-slidable keys mounted upon stems disposed intermediate the rock-shafts, and toggles forming link connections between the stems of the keys and the cranks of adjacent rock-shafts.

5. In a device of the class described, a plurality of rock-shafts each provided with two cranks, one at and the other near its front end, key-carrying stems mounted slidably above the rock-shafts, said stems being disposed intermediate said shafts and alternately with relation to the cranks thereon, and toggles forming link connections between said stems and the cranks of the shafts adjacent thereto.

6. In a device of the class described, a rock-shaft having an elongated U-shaped pocket connected therewith, a partition engaging said pocket, bearings for the rock-shaft, and transverse rods engaging the upper edge of the pocket.

7. In a device of the class described, a rock-shaft, an elongated U-shaped pocket connected therewith, a partition engaging said pocket and secured by clenching the upper edges of said U-shaped pocket thereon, and transverse rods engaging the upper edge of said pocket.

8. In a device of the class described, a plurality of rock-shafts, partitions connected with said rock-shafts, operating means whereby the upper edges of said partitions may be spread apart, and transverse rods forming supports for papers stored in the compartments thus formed.

9. In a device of the class described, a plurality of rock-shafts, partitions supported thereon in pockets connected with said rock-shafts, a rod extending transversely through said pockets, a helical spring coiled upon said rod and having coils abutting and pressing equally upon the said pockets and operating means whereby adjacent pairs of rock-shafts may be oscillated in opposite directions against the tension of the spring.

10. In a device of the class described, a plurality of movable walls forming compartments, a plurality of keys adapted to open said compartments, and connecting means between each key and both walls of the compartment controlled thereby, said keys being indexed to identify them with said compartments.

11. In a device of the class described, a plu-

rality of compartments having vertically-disposed walls hinged at their lower edges, a plurality of keys corresponding with said compartments, and connecting means between each key and both walls of the compartment controlled thereby whereby said compartments may be opened by pressure upon the keys, said keys being indexed to identify them with said compartments.

12. In a device for holding papers, cards, &c., removably, the combination of a series of laterally-movable partitions, spaced from each other, means which space and support them normally vertical, and means for moving any two adjacent partitions of the series outward from each other, substantially as specified.

13. In a device for holding papers, cards, &c., removably, the combination of a series of vertical parallel partitions, which are movable laterally, and a like number of parallel rock-shafts attached to the lower edges of the respective partitions, means for rotating two adjacent rock-shafts, simultaneously, in opposite directions, and springs which hold the partitions normally vertical and separated, but permit them to open from each other in opposite directions, substantially as described.

14. In a device for holding papers, cards, &c., removably, the combination, with vertical partitions, of coiled springs arranged on a suitable support at right angles to the partitions, the latter being placed between adjacent convolutions of the springs whereby they are supported and adapted to move bodily from each other, and means for moving the partitions, as described.

In testimony that I claim the foregoing as my own I have hereto affixed my signature in the presence of two witnesses.

THOMAS J. JOHNSON.

Witnesses:
R. G. SHEETS,
W. N. RUCKER.