Aug. 17, 1954 W. A. HUMPHREY 2,686,331

SUCTION CLEANING DEVICE WITH NOZZLE ELEVATOR AND CONVERTER FOR SECURING NOZZLE IN ELEVATED POSITION

Filed May 4, 1950 2 Sheets-Sheet 1

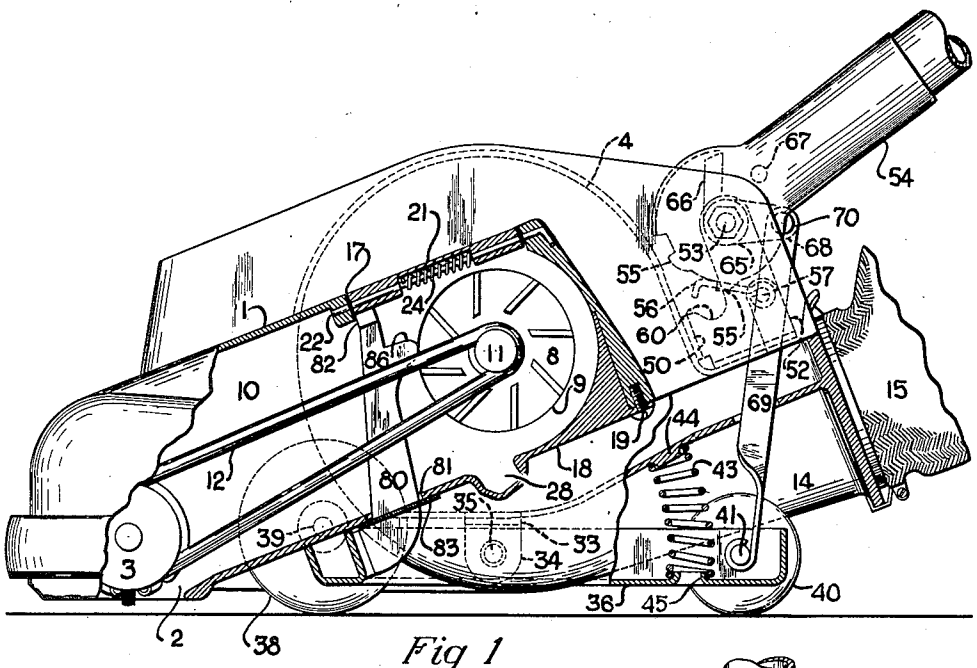

Fig 1

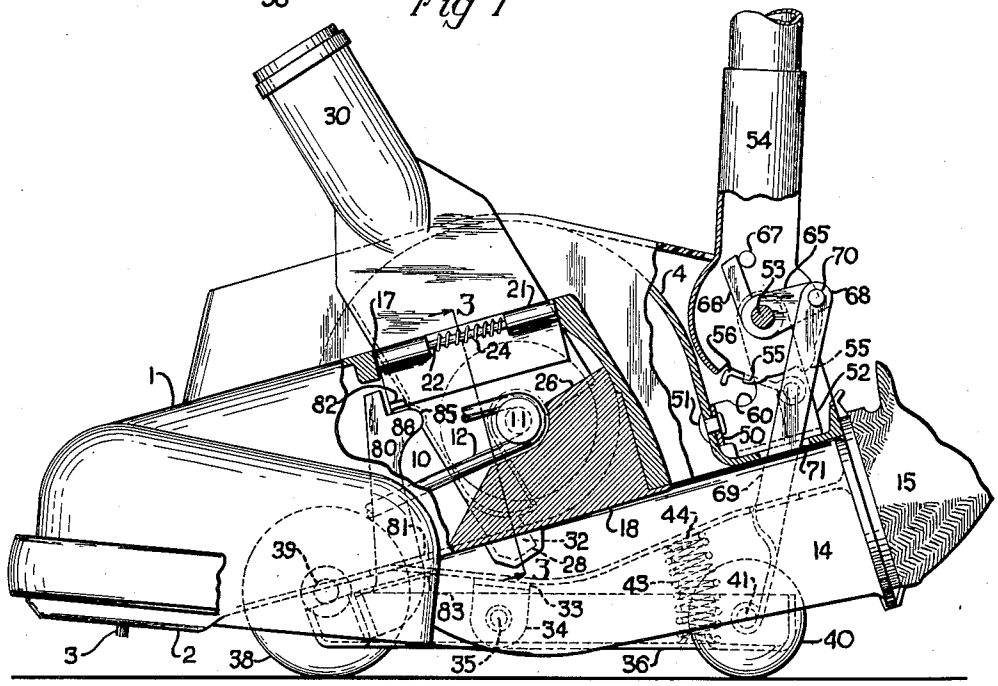

Fig. 2

INVENTOR.
Warren A. Humphrey
BY
Harry S. Duarse
ATTORNEY.

Aug. 17, 1954 W. A. HUMPHREY 2,686,331

SUCTION CLEANING DEVICE WITH NOZZLE ELEVATOR AND CONVERTER FOR SECURING NOZZLE IN ELEVATED POSITION

Filed May 4, 1950 2 Sheets-Sheet 2

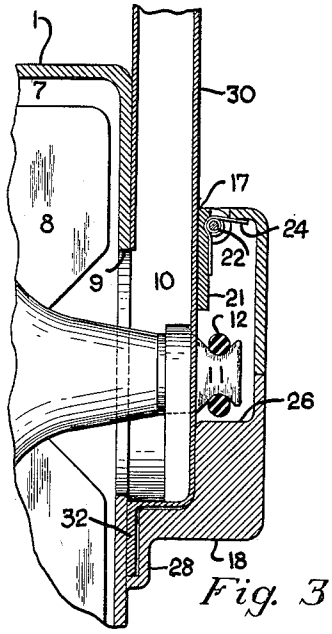

Fig. 3

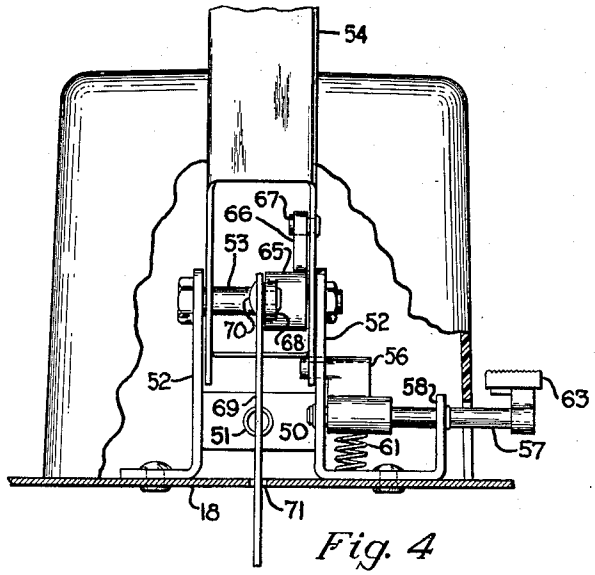

Fig. 4

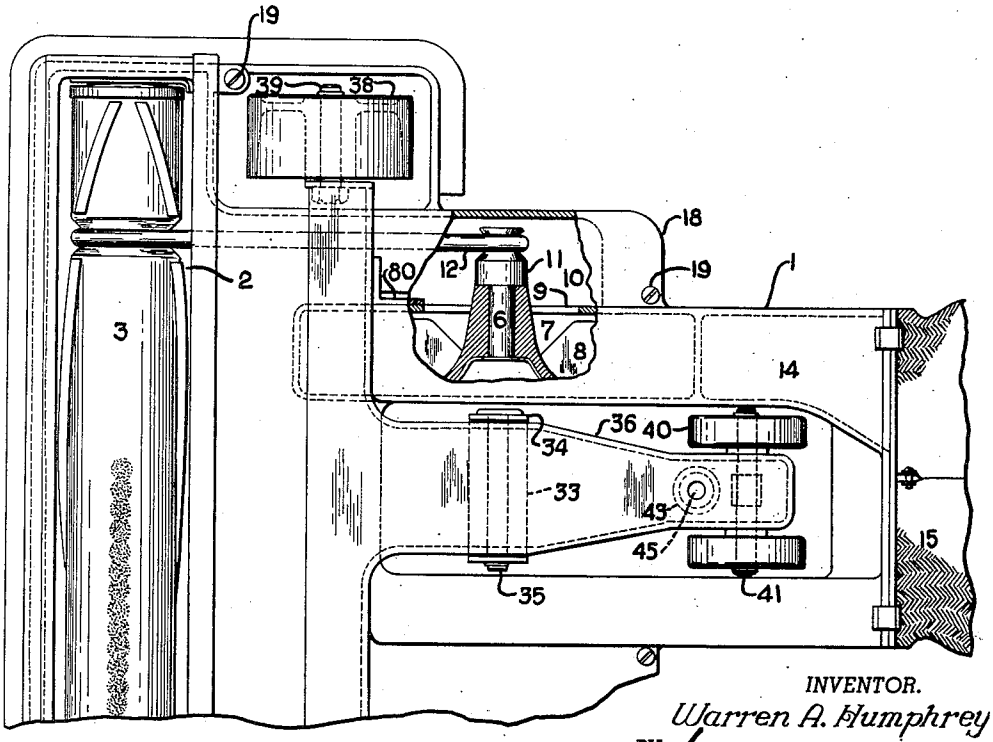

Fig. 5

INVENTOR.
Warren A. Humphrey
BY
Harry E. Dwarris
ATTORNEY.

Patented Aug. 17, 1954

2,686,331

UNITED STATES PATENT OFFICE

2,686,331

SUCTION CLEANING DEVICE WITH NOZZLE ELEVATOR AND CONVERTER FOR SECURING NOZZLE IN ELEVATED POSITION

Warren A. Humphrey, Canton, Ohio, assignor to The Hoover Company, North Canton, Ohio, a corporation of Ohio

Application May 4, 1950, Serial No. 160,069

7 Claims. (Cl. 15—333)

1

My present invention relates to the art of suction cleaning devices and more particularly to a suction cleaner embodying a propelling handle operated means for shifting the cleaner relative to its wheel support to raise the nozzle from the floor when the handle is in a preselected position.

It is a further object of my invention to provide a suction cleaning apparatus characterized by the provision of a rigid wheel supported chassis upon which the cleaner body proper is pivotally mounted in conjunction with resilient means normally maintaining a predetermined relationship between the chassis and cleaner body which relationship is alterable by moving the handle into a preselected position which simultaneously conditions the cleaning apparatus for conversion to off-the-floor cleaning.

It is a further object of my invention to provide a suction cleaning apparatus of the above described character in which the device for converting to off-the-floor cleaning locks the cleaner body and wheel support in a selected condition independently of the position of the propelling handle of the cleaner.

Other objects and advantages of the invention will become apparent as the description proceeds when taken in connection with the accompanying drawing wherein:

Figure 1 is a side elevational view partially in section of a suction cleaning apparatus embodying my invention;

Figure 2 is a view similar to Figure 1 but illustrating the apparatus converted for off-the-floor cleaning operation;

Figure 3 is a fragmentary sectional view taken along the line 3—3 of Figure 2 looking in the direction of the arrows;

Figure 4 is a partial rear elevational view of the apparatus of Figure 1 illustrating a handle mount and nozzle adjusting mechanism; and

Figure 5 is a partial bottom plan view of the apparatus of Figure 1 sectioned adjacent the suction fan inlet port and suction air passageway from the nozzle.

Referring now to the drawings in detail and first to Figure 1 thereof the apparatus includes a main frame structure 1 which includes an elongated surface cleaning suction nozzle 2 across the front portion thereof which has rotatably mounted therein a surface brushing and agitating member 3. Rearwardly of the suction nozzle 2 the main body 1 includes a housing 4 within which is mounted a conventional electrical motor, not shown. The motor includes a shaft 6 which projects into a volute shaped suction air

2

fan chamber 7 and carries and drives a suction air fan 8. The shaft 6 projects through the suction eye 9 of the fan chamber 7 to extend into a suction air passageway 10 communicating with the suction nozzle 2. The end of the shaft 6 carries a small diameter pulley 11 connected by a belt 12 to drive the agitator structure 3.

The lower portion of the volute shaped fan chamber opens into a discharge passageway 14 which extends to the rear of the cleaner body and discharges into a suitable filter 15 detachably secured to the rear of the body 1.

The bottom wall 18 of the suction air passageway 10 is removable and is secured into the other portions of that passageway, which may if desired be integral with the body 1, by means of suitable studs 19. The top wall of the suction air passageway 10 adjacent the point at which it joins the fan eye 9 is provided with an opening 17 which is normally closed by a door 21 rotatably mounted upon a pin 22 and biased to closed position by a torsion spring 24. The pivot for the door 21 is spaced outwardly of the out facing side wall of the fan chamber 7 and its movable, free end abuts that wall in the closed position of the door. This door provides a closure and seal for the passageway 10 during normal on-the-floor cleaning operation and is the access port for the converting tool which is utilized to convert the apparatus to off-the-floor cleaning.

The wall 18 actually forms the lower half of the outer side wall of the suction air passage in the region of the fan eye and is built up at this point as indicated by reference charcater 26 below and rearwardly of the pulley 11 and belt 12 so as to provide a flat surface spaced inwardly, below, and rearwardly of the belt 12 facing the fan eye 9. Below and forwardly of the fan eye 9 the wall 18 is also provided with a depressed portion forming a cavity 28 for a purpose to be described more fully hereinafter.

To change the cleaner to off-the-floor condition a converting tool 30 is inserted through the opening 17. As the converter tool is inserted the door 21 pivots on the pintle 22 to the position illustrated in Figures 2 and 3. The outside face of the converter tool 30 is slotted to extend around the pulley 11 leaving only a running clearance therebetween. The outside face of the converter tool 30 also seats against the abutment 26 to complete the clearance seal around the pulley thus providing free communication between the interior of the tool 30 and the suction eye 9 of the fan. The tool 30 is also provided with a projecting tongue 32 which seats in the depres-

sion 28 to seal along the inner wall of the air passageway 10 and below the lower limit of the fan eye 9. The forwardly facing end wall of the tool 30 forms a complete air seal across the air passageway 10 in the direction of the nozzle 2.

When the tool is inserted, the converter door 21 lies in the position shown in Figure 3 against the bias of the torsion spring 24 and immediately returns to closed position to seal the upper portion of the passageway 10 when the converter tool 30 is withdrawn.

A bracket 33 is secured to the underside of the cleaner body 1 at the central portion thereof and is provided at its ends with downwardly directed tongues 34 supporting a pivot pin 35. A T-shaped wheel supporting chassis 36, channel shape in cross section, is pivotally supported upon the pin 35. The cross arm of the T-shaped support 36 extends along and rearwardly of the cleaner nozzle beyond the laterally projecting portions of the body 1 and air passageway 10 as shown most clearly in Figures 1 and 5. Wide tread front supporting wheels 38 are pivotally carried on pins 39 which are supported by the outer ends of the cross arm of the T-shaped wheel support 36. The wheels 38 lie in wheel pockets immediately rearwardly of the nozzle 2. The pedestal of the T-shaped arm 36 extends toward the rear of the cleaner adjacent the rear portion of the discharge conduit 14. A pair of narrow tread supporting wheels 40 are pivotally mounted upon a pivot pin 41 carried by the rear end of the base of the T-shaped chassis 36. As shown most clearly in Figure 1, the cross arm of the T-shaped carriage 36 is channel shaped in cross section. A stiff compression spring 43 extending between a boss 44 on the underside of the main cleaner body 1 and a boss 45 upstanding from the chassis 36 biases the cleaner body 1 in a counterclockwise direction as shown in Figure 1. Pivotal movement of the body 1 under the bias of the spring 43 is limited by engagement between the cross arm of the chassis 36 and the lower face of the plate 18. When the plate 18 is in engagement with the chassis 36 the nozzle 2 is in surface cleaning position and this is the normal on-the-floor cleaning condition of the apparatus.

A handle mounting structure is secured to the rear portion of the main body 1 rearwardly of the motor fan assembly and substantially centrally of the cleaning structure as a whole. This construction comprises a generally U-shaped bracket having a bight portion 50 secured as by rivets 51 to the rear wall of the motor housing 4 and having side wings 52 projecting rearwardly from the bight 50. The wings 52 carry a pintle pin 53 upon which is pivotally mounted a handle pivoting and securing member 54 having a tubular socket, adapted to receive a propelling handle as shown, merging into a channel shaped end portion engaging the pintle 53. The handle pivoting member 54 includes a sector shaped section provided with a plurality of locking projections 55 adapted to be engaged by a spring biased detent securing member 56. The member 56 is immovably secured to a pin 57 pivoted in the leg 52 of the bracket 52 adjacent the sector portion of the handle mount 54 and a lug 58 formed in a projecting portion of the bracket as shown most clearly in Figure 4. The major portion of the detent 56 is positioned outside the wings 52 of the handle support bracket however the detent portion 56 extends through a cut out portion 60 of the right hand bracket, as viewed in Figure 2 into the path of movement of the lugs 55. A small compression spring 61 urges the detent into engagement with the handle sector so as to secure the handle against further clockwise movement when either of the projections 55 are engaged with detent 56. A foot pressure operated pedal 63 is secured to an end of the shaft 57 which projects beyond the cleaner body proper so as to pivot the detent 56 out of the path of projections 55 when depressed.

A bell crank member 65 is pivotally mounted upon the pintle 53 within the channel shaped handle mounting member 54. The bell crank member includes a first arm 66 projecting generally upwardly as shown in Figures 2 and 4 into the path of movement of a rigid pin 67 secured to the handle mounting member 54. The bell crank includes a second arm 68 pivotally connected to a strap lever 69 by means of a pivot pin 70. The strap lever 69 extends downwardly through a slot 71 in the frame 1 and has its lower end secured to the pivot pin 41 upon which the wheels 40 are mounted. During normal operation of the cleaner the parts assume the position shown in Figure 1 in which the wheel chassis and cleaner body are maintained in a fixed relation and the pin 67 is removed from contact with the bell crank arm 66. As the handle is moved to vertical storage position the pin 67 engages arm 66 rocking the bell crank which in turn pulls upwardly on the stop lever 69 forcing the cleaner body to pivot in a clockwise direction, as viewed in Figures 1 and 2, with respect to the wheel supporting chassis and against the force of the spring 43. As the cleaner body 1 pivots on the pin 35, the nozzle and the surface agitating structure 3 rises away from the supporting surface upon which the cleaner rests and above the aforesaid on-the-floor cleaning position. As shown in Figure 2 the handle is locked by the detent structure 55—56 in storage position with the nozzle raised against the bias of the spring 43.

The cross arm of the T-shaped wheel supporting chassis 36 is provided with an upwardly projecting arm 80 extending through a slot 81 in the lower plate 18 of the air passageway 10. The upper end of the arm 80 is positioned to abut a projection 82 depending from the lower side of the converter opening closure 21 to maintain this closure in the closed position during normal operation of the machine. The projection 82 depends from the inner edge of the closure 21 and abuts the side wall of the fan chamber to stop the closure 21 in closed position under the bias of spring 24. The arm 80 carries a gasket of soft rubber or similar material 83 which abuts the lower face of the plate 18 to seal the opening 81 when the parts are in the normal operating floor cleaning position illustrated in Figure 1.

When the cleaner handle is raised to vertical storage position as illustrated in Figure 2 and the cleaner is rocked to lift the nozzle above the supporting surface, the arm 80 shifts away from the stop 82 to allow the door 21 to be opened against the bias of spring 24 when the converter is inserted.

The converter 30 is provided with a slight depression 85 adapted to register with a projecting tongue 86 upon the arm 80. The engagement between the tongue 86 and depression 85 serves to secure the converter positively in position and to lock the cleaner body in the nozzle elevated position as illustrated in Figure 2. Once this engagement has been secured the pedal 63 may be depressed to release the detent 56 after which the handle may be placed in any position desired.

Thus the arm 80 and its projecting tongue 86 serve to secure the door 21 in its closed position in normal operating condition and to latch the converter in position and the cleaner in the nozzle elevated position once the converter is inserted.

When it is desired to insert or remove the converter, the rear end of the cleaner is depressed to rock the cleaner body on the support 36 so that the tongue 86 is removed from the position of Figure 2 sufficiently to clear the notch 86, i. e. to be aligned with or clear the edge of the converter. The cleaner body may be pivoted to accomplish the foregoing by applying a downward pressure on the rear thereof or by rocking the handle slightly forwardly of the position shown in Figure 2. Such additional forward rocking of the handle is allowed by the clearance between the detent 56 and the front part of the handle socket 54 which also allows relief of the pressure between the detent 56 and the projection 55 when the operator desires to disengage the detent 56 to lower the handle to operating position.

It is apparent from Figures 2 and 3 that the converter, in conjunction with the member 26 of the closure 18, seals substantially around the belt pulley but inwardly of the belt so that the belt is outside the air stream when the cleaner is converted to off-the-floor operation.

While I have illustrated and described the invention in considerable detail, it is to be understood that various changes may be made in the arrangement, proportion and construction of parts without departing from the spirit of the invention or the scope of the appended claims.

I claim:

1. An ambulatory suction cleaning apparatus comprising a main body member, a surface cleaning nozzle and a suction air fan in said body member, means in said body member forming a suction air passageway from said nozzle to said fan, an opening in said passageway adapted to receive a converter for converting to off-the-floor cleaning operation, means closing said opening, a supporting carriage for said body member, front and rear supporting wheels mounted on said carriage, means pivotally mounting said body member on said carriage, resilient means biasing said body member into a predetermined position with respect to said carriage in which said nozzle is in surface cleaning position, means on said carriage and said closing means positioned to latch said closing means in closed position when said nozzle is in surface cleaning position, means for pivoting said body member on said carriage against the bias of said resilient means to raise said nozzle from said surface cleaning position and to operate said latching means to unlatch said closure means, and latching means having a part adapted to be engaged by a converter when inserted into said air passageway to secure said nozzle in said raised position.

2. An ambulatory suction cleaning apparatus comprising a main body member, a surface cleaning nozzle and a suction air fan in said body member, means in said body member forming a suction air passageway from said nozzle to said fan, an opening in said passageway adapted to receive a converter for converting to off-the-floor cleaning operation, a pivotally mounted gate for closing said opening, spring means biasing said gate to closed position, a carriage having front and rear wheels, means pivotally supporting said body member on said carriage, resilient means biasing said body member into a predetermined position on said carriage in which said nozzle is

in surface cleaning position, means projecting from said carriage and engaging said gate to prevent opening thereof when said nozzle is in said position, a propelling handle pivotally mounted on said body member, releasable means for securing said handle in a predetermined position relative to said body, a linkage connecting said handle and said carriage operable when said handle is movable to said position to pivot said body to raise said nozzle above said surface cleaning position and to remove said gate from said means projecting from said carriage, a converter adapted to be inserted through said opening to block said air passageway between said fan and said nozzle to convert the apparatus for off-the-floor cleaning, and means on said means projecting from said carriage adapted to engage said converter when in operating position to secure said body member in said nozzle raised position independently of the position of said propelling handle.

3. An ambulatory suction cleaning apparatus comprising a body member including a surface cleaning nozzle and a suction air fan and means forming an air passageway from said nozzle to said fan, a propelling handle pivotally attached to said body member, a support frame pivotally attached to said body member, front and rear supporting wheels on said support frame, said frame and said body member having parts thereof positioned to engage to limit pivotal movement of said body member in one direction with said nozzle in normal surface cleaning position, spring means biasing said body member into engagement with said support frame, a bell crank pivoted on said body member, a link connected to said support frame and to one arm of said bell crank, a member movable with said handle for engaging the other arm of said bell crank as said handle moves to storage position to rotate said crank in a manner to rock said body member against the bias of said spring means to raise said nozzle above said surface cleaning position, and releasable means for latching said handle in storage position.

4. An ambulatory suction cleaning apparatus comprising a body member including a surface cleaning nozzle and a suction air fan and means forming an air passageway from said nozzle to said fan, a propelling handle pivotally attached to said body member, a support frame pivotally attached to said body member, front and rear supporting wheels on said support frame, said frame and said body member having parts thereof positioned to engage to limit pivotal movement of said body member in one direction with said nozzle in normal surface cleaning position, spring means biasing said body member into engagement with said support frame, a converter port in said air passageway, a closure member for said port, an arm on said support frame positioned to engage said closure to secure the same in closed position when said nozzle is in said cleaning position, a bell crank pivoted on said body member, a link connected to said support frame and one arm of said bell crank, a member movable with said handle for engaging the other arm of said bell crank as said handle moves to storage position to rotate said crank in a manner to rock said body member against the bias of said spring means to raise said nozzle above said surface cleaning position and to shift said closure away from said arm, and releasable means for latching said handle in storage position.

5. An ambulatory suction cleaning apparatus

comprising a body member including a surface cleaning nozzle and a suction air fan and means forming an air passageway from said nozzle to said fan, a propelling handle pivotally attached to said body member, a support frame pivotally attached to said body member, front and rear supporting wheels on said support frame, said frame and said body member having parts thereof positioned to engage to limit pivotal movement of said body member in one direction with said nozzle in normal surface cleaning position, spring means biasing said body member into engagement with said support frame, a converter port in said air passageway, a closure member for said port, an arm on said support frame positioned to engage said closure to secure the same in closed position when said nozzle is in said cleaning position, a bell crank pivoted on said body member, a link connected to said support frame and one arm of said bell crank, a member movable with said handle for engaging the other arm of said bell crank as said handle moves to storage position to rotate said crank in a manner to rock said body member against the bias of said spring means to raise said nozzle above said surface cleaning position and to shift said closure away from said arm, and releasable means for latching said handle in storage position, a converter adapted to be inserted through said converter port to block air flow through said air passageway from said nozzle, and a projection on said arm positioned to engage said converter when in its operative position to secure said converter in such position and to maintain said nozzle in said raised position independently of the position of said handle.

6. An ambulatory suction cleaning apparatus comprising a body member including a surface cleaning nozzle and a suction air fan and means forming an air passageway from said nozzle to said fan, a support carriage, means movably mounting said body member on said carriage, front and rear supporting wheels in said carriage, means normally maintaining said body member in predetermined relation to said carriage in which said nozzle is in surface cleaning position, a port in said passageway adapted to receive a converter tool for converting the cleaner for off-the-floor operation, a closure for said port, means on said carriage for latching said closure in closed position when said body is in said predetermined relation to said carriage, means for lowering a portion of said carriage with respect to said body member to unlatch said closure and to raise said nozzle above surface cleaning position, a converting tool for converting the apparatus for off-the-floor cleaning operation adapted to be inserted through said port to block air flow from said nozzle to said fan, and said latching means being positioned to engage said converting tool in the operative position thereof to secure said nozzle above said surface cleaning position.

7. An ambulatory suction cleaning apparatus comprising a main body member, a surface cleaning nozzle member in said body member, a suction air fan in said body member, means forming a suction air passageway connecting said fan to said nozzle member, said passageway having an opening adapted to receive a converter to convert to off-the-floor cleaning, a propelling handle pivotally connected to said body member, a support structure for said body member including front supporting wheels and rear supporting wheels and means pivotally mounting said rear wheels attached to the body member for movement toward and away from said body member, resilient means normally biasing said body member and said rear wheel mounting means into a predetermined relation in which said nozzle is in surface cleaning position, means on said rear wheel mounting means forming a barrier preventing insertion of a converter into said opening when said nozzle is in surface cleaning position, a linkage having a part connected to said rear wheel mounting means and an actuating part engageable by said handle moving to an upright storage position for pivoting said rear wheel mounting means against the bias of said resilient means to raise said nozzle above said surface cleaning position and to render said barrier means ineffective to bar entry of a converter into said passageway, and means on said barrier means positioned to engage a converter in said passageway to retain said nozzle above surface cleaning position.

References Cited in the file of this patent

UNITED STATES PATENTS

Number	Name	Date
1,507,417	Orr	Sept. 2, 1924
1,642,518	Throop	Sept. 13, 1927
2,309,860	Watts	May 5, 1936
2,174,595	Pierce	Oct. 3, 1939
2,198,900	Becker	Apr. 30, 1940
2,279,213	Troxler	Apr. 7, 1942
2,325,796	Pierce	Aug. 3, 1943
2,329,563	Taylor	Sept. 14, 1943