J. H. WHITE.

GATE FOR SLUDGE BOXES.

APPLICATION FILED AUG. 26, 1915.

1,192,141.

Patented July 25, 1916.

2 SHEETS—SHEET 1.

Fig. 1.

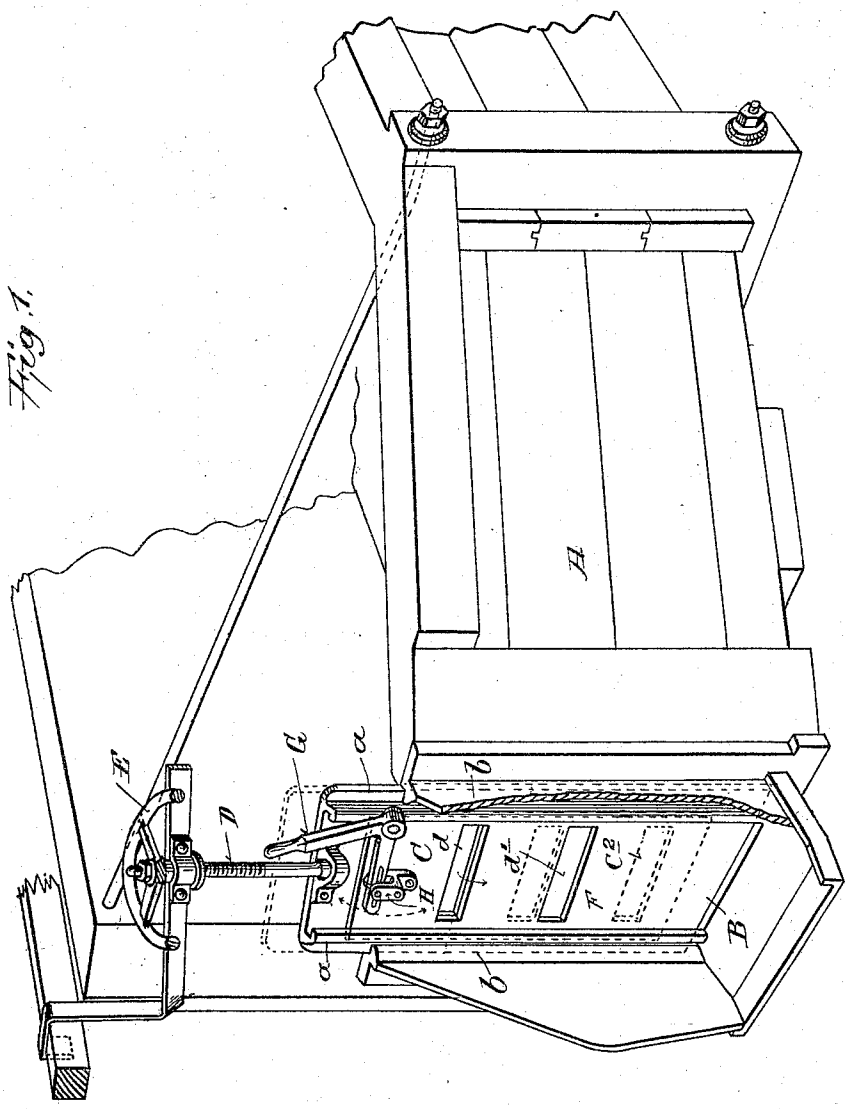

Inventor
James H. White

By his Attorney
Clarkson A. Collins.

THE NORRIS PETERS CO., PHOTO-LITHO. WASHINGTON, D. C.

J. H. WHITE.

GATE FOR SLUDGE BOXES.

APPLICATION FILED AUG. 26, 1915.

1,192,141.

Patented July 25, 1916.

2 SHEETS—SHEET 2.

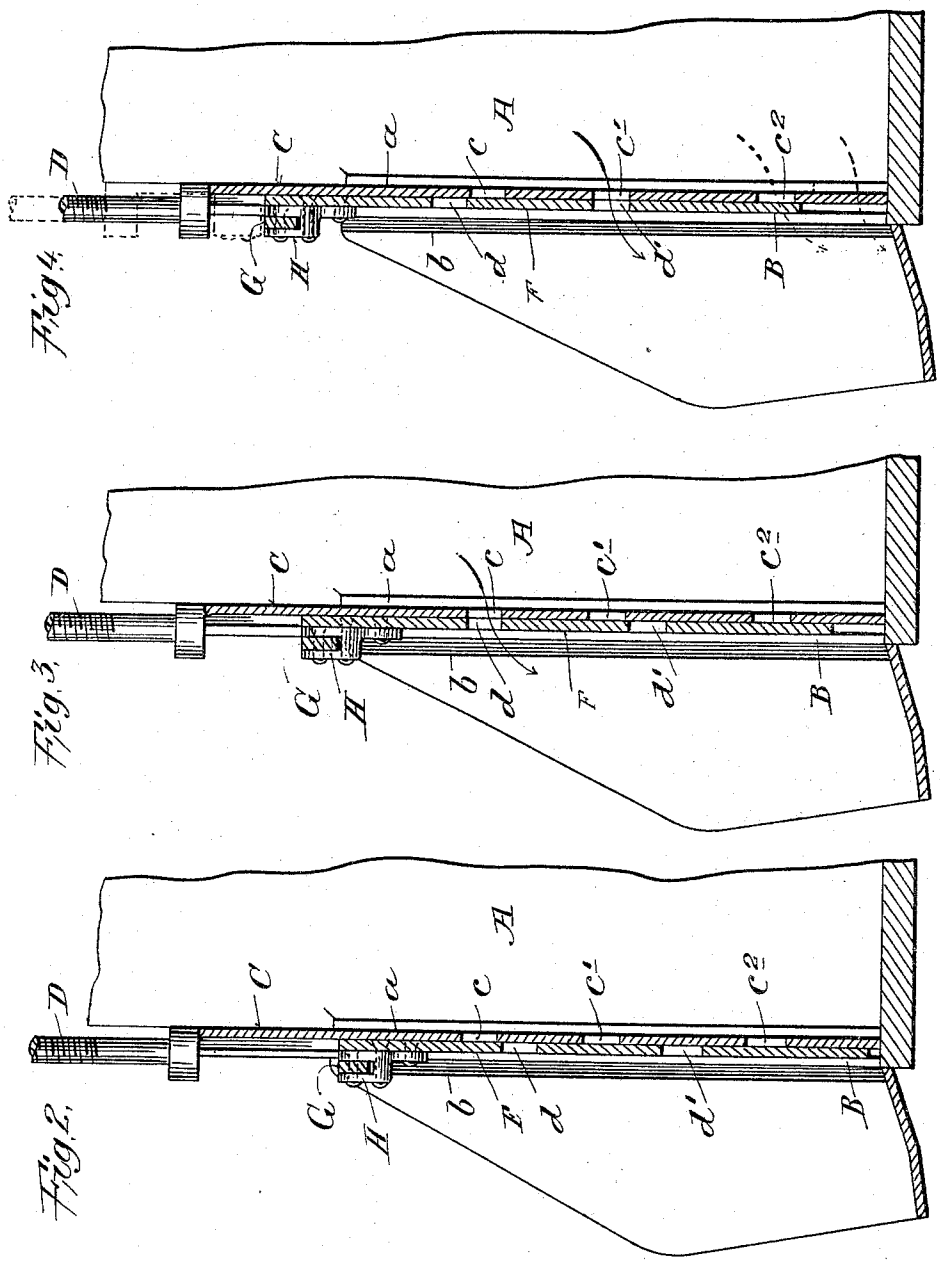

Inventor
James H. White
By his Attorney
Clarkson A. Collins.

THE NORRIS PETERS CO., PHOTO-LITHO., WASHINGTON, D. C.

UNITED STATES PATENT OFFICE.

JAMES H. WHITE, OF HOLT, ALABAMA, ASSIGNOR, BY MESNE ASSIGNMENTS, TO SEMET-SOLVAY COMPANY, OF SOLVAY, NEW YORK, A CORPORATION OF NEW YORK.

GATE FOR SLUDGE-BOXES.

1,192,141. Specification of Letters Patent. Patented July 25, 1916.

Application filed August 26, 1915. Serial No. 47,535.

To all whom it may concern:

Be it known that I, JAMES H. WHITE, a citizen of the United States, residing at Holt, in the county of Tuscaloosa and State of Alabama, have invented certain new and useful Improvements in Gates for Sludge-Boxes, of which the following is a specification.

My invention relates particularly to the means for controlling the discharge of its liquid and solid contents from the sludge-box, or vessel, in which, in the process of manufacturing sulfate of ammonia, the salt and acid are received from the saturater in which the salt is formed, and from which it is discharged to a centrifugal separator in which the salt is dried. In such devices as heretofore constructed the port or opening from the sludge-box has been controlled by a gate arranged to open at the bottom to permit the discharge of the contents of the sludge-box. The result of this construction has been to either cause an undue proportion of liquid to be carried with the salt to the separator or a loss of salt in drawing off the liquid separately.

The object of my improvements is to obviate this difficulty and enable the liquid which lies on top of the salt in the sludge-box to be first drawn off without taking with it any of the salt and the salt to be afterward discharged accompanied by a minimum amount of liquid.

To this end my invention consists in the construction and arrangement hereinafter described and claimed, and illustrated in the accompanying drawings Figure 1 of which shows a perspective view of the device, Fig. 2 shows a vertical section through the gates showing the discharge ports all closed, Fig. 3 is a similar section showing the upper discharge port open, and Fig. 4 a similar section showing the next lower discharge port open.

Referring to the drawings, A indicates a portion of a sludge-box constructed in the usual manner and having a discharge port at B. The discharge port is controlled by a main gate, C, arranged to be moved vertically in guides *b*, *b*, by suitable means as the threaded rod, D, and hand wheel, E.

Lying closely against the outer surface of the main gate, C, and arranged to move vertically in guides, *a*, *a*, secured thereto or forming a part thereof is a secondary gate, F, provided with lifting means, as the bent lever, G, pivoted to the main gate, C, and engaged with a clevis, H, secured to the gate, F. The primary or main gate, C, is provided with a plurality of ports, *c*, c^1, c^2, and the secondary gate, F, is also provided with ports, *d*, d^1. The gate, F, is so proportioned and the ports therein and in the gate, C, are so arranged, that, when the gate, F, is lifted the ports *c*, c^1, c^2, in the gate, C, will be successively opened, beginning with the uppermost, by the successive registration therewith of the corresponding parts in the gate, F. It is not necessary that there should be in the gate, F, any port corresponding to the lowest of the ports, *c*, since this port is opened, when required, by the passage past it of the lower edge of the gate, F.

The method of operation of the device is as follows: While the sludge-box, A, is being filled the gates, C, F, are both in their lowest position and the port, B, is closed, the ports, *c*, c^1, c^2, being closed by the solid part of the gate, F. When it is desired to discharge the contents of the sludge box, the gate, F, is first lifted until the uppermost port, *d*, therein registers with the corresponding uppermost port, *c*, in the gate, C, the other ports remaining closed. Any liquid in the sludge-box above the lower edge of the uppermost port, *c*, is then discharged therethrough. In case the body of salt in the sludge-box does not extend above the next lower port in the gate, C, the gate, F, is further lifted to open this port, and so on until practically all the liquid lying above the salt has been discharged, the port, c^2, being opened when required by the passing above it of the lower edge of the gate, F.

The gate, C, is then lifted by manipulation of the wheel, E, and the salt is discharged through the space below the gate. In this manner I am able to discharge practically all of the liquid without carrying any of the salt therewith, and to transmit the salt to the separator carrying a much smaller percentage of liquid than heretofore.

What I claim as new and desire to secure by Letters Patent is:

1. In a sludge-box gate the combination of a main gate having upper and lower ports therein, a secondary gate arranged by its movement to open and close said ports,

means whereby the upward movement of said secondary gate opens said ports in succession, and means for independently raising said secondary gate.

2. In a sludge-box gate, the combination of a main gate having a plurality of ports therein, a secondary gate, means whereby the upward movement of said secondary gate opens said ports in succession from the upper to the lower, and means for independently raising said secondary gate.

In testimony whereof, I have hereunto subscribed my name, this 4th day of August A. D., 1915.

JAMES H. WHITE.

Witnesses:
EUGENE S. MILLER,
W. BERT BRIDGE.

Copies of this patent may be obtained for five cents each, by addressing the "Commissioner of Patents. Washington, D. C."