J. ILVONEN.

COMBINED MUSIC STAND AND CASE.

APPLICATION FILED MAR. 29, 1913.

1,069,617.

Patented Aug. 5, 1913.

2 SHEETS—SHEET 1.

Fig. 1

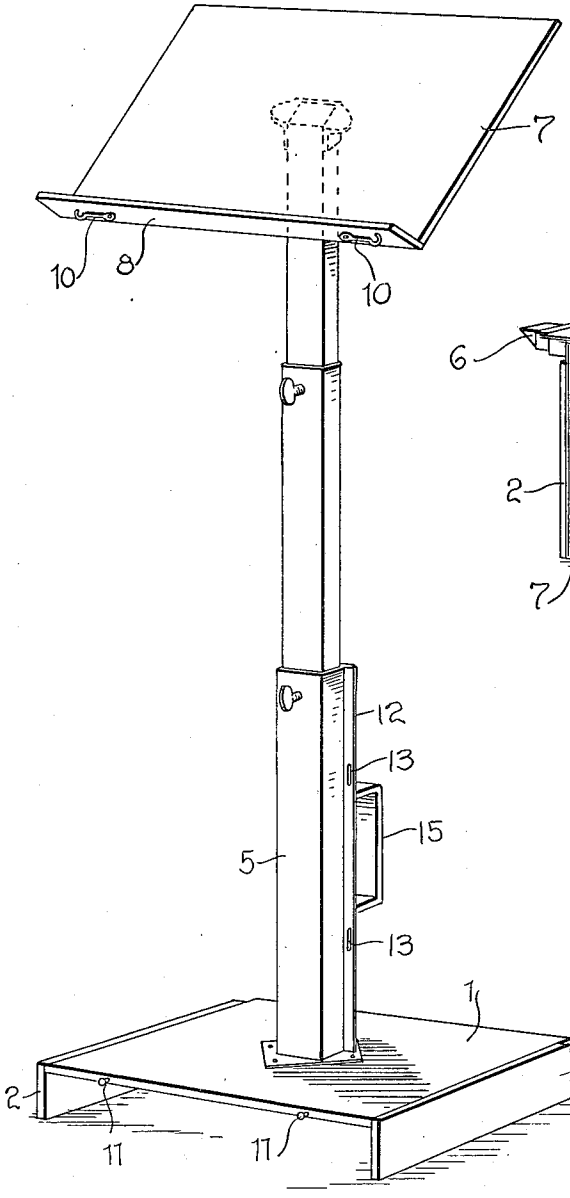

Fig. 2

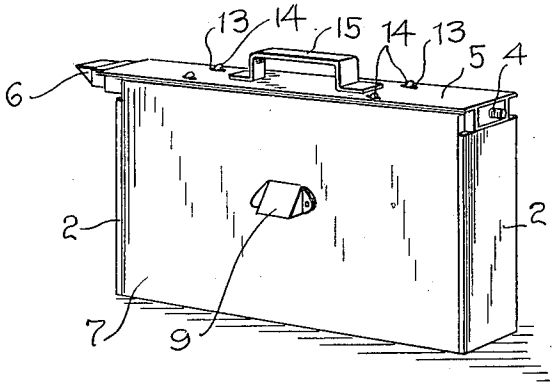

Fig. 6

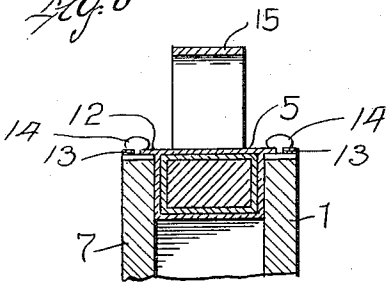

Witnesses

Robert M. Sutphen.

A. D. Hurd.

Inventor

JALMARI ILVONEN

By Watson E. Coleman

Attorney.

COLUMBIA PLANOGRAPH CO., WASHINGTON, D. C.

J. ILVONEN.

COMBINED MUSIC STAND AND CASE.

APPLICATION FILED MAR. 29, 1913.

1,069,617.

Patented Aug. 5, 1913.

2 SHEETS—SHEET 2.

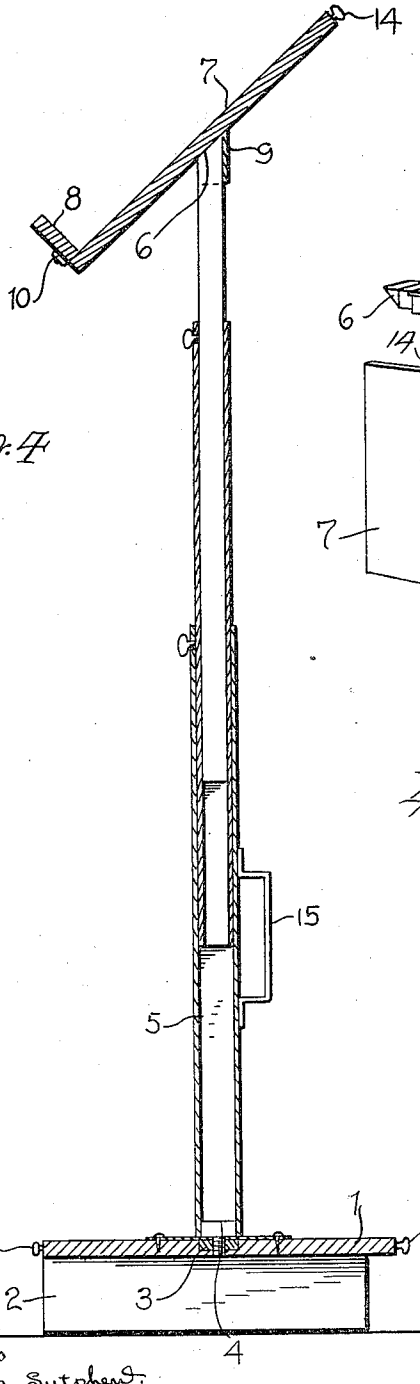

Fig. 4

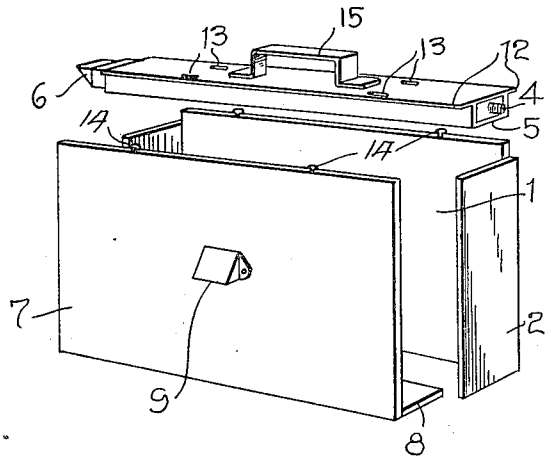

Fig. 5

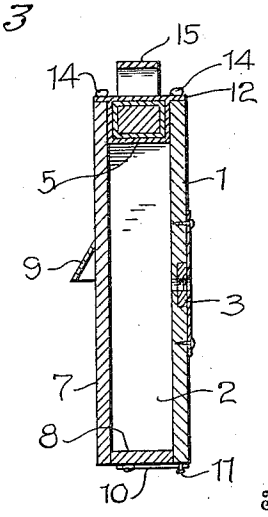

Fig. 3

Witnesses

Robert M. Sutphen.

A. L. Hind.

Inventor

JALMARI ILVONEN

By Watson E. Coleman

Attorney

UNITED STATES PATENT OFFICE.

JALMARI ILVONEN, OF RANIER, MINNESOTA.

COMBINED MUSIC STAND AND CASE.

1,069,617. Specification of Letters Patent. Patented Aug. 5, 1913.

Application filed March 29, 1913. Serial No. 757,676.

To all whom it may concern:

Be it known that I, JALMARI ILVONEN, a citizen of Finland, residing at Ranier, in the county of Koochiching and State of Minnesota, have invented certain new and useful Improvements in Combined Music Stands and Cases, of which the following is a specification, reference being had to the accompanying drawings.

This invention relates to new and useful improvements in music racks and more particularly to a combined rack and case and my object is to provide a device of this character which, when not in use as a music rack may be readily folded and set up for use as a case for carrying music from place to place.

A further object of the invention resides in providing a device which may be quickly and readily folded for use as a case or set up for use as a rack and a still further object resides in providing a device which is simple and durable in construction, inexpensive to manufacture and one which will be very efficient and useful in operation.

With these and other objects in view, the invention consists in the novel features of construction, combination and arrangement of parts as will be hereinafter referred to and more particularly pointed out in the specification and claims.

In the accompanying drawings forming a part of this application, Figure 1 is a perspective view of the device set up for use as a music stand. Fig. 2 is a similar view showing the same set up for use as a case. Fig. 3 is a vertical transverse section through the device when set up for use as a case. Fig. 4 is a vertical section through the device set up as a music stand. Fig. 5 is a perspective view of the device with the parts separated and adapted to be set up for use as a case; and Fig. 6 is an enlarged fragmentary vertical section through the upper portion of the device set up for use as a case.

In describing my invention, I shall refer to the drawings in which similar reference characters designate corresponding parts throughout the several views and in which 1 indicates a foot plate, to the side edges of which are secured the flanges or cleats 2, which space said foot plate from the floor when so positioned and this plate 1 and the cleats or flanges 2 formed thereon, form respectively the one side wall and the end walls of the music case, when the device is set up for use as such.

Arranged in an opening in the central portion of the foot plate 1, is a nut or the like 3, which is adapted to receive in engagement therewith the threaded end of a bolt 4 which is carried in the lower end of the lower section of a telescoping upright 5. As many sections may be provided in the telescoping upright as desired, I having shown but three of said sections, and the upper end of the inner-most telescoping section is beveled, as shown at 6, the purpose of which will be hereinafter and more particularly described.

The rack or music support proper consists of a plate 7, having a laterally extending supporting flange 8 formed thereon, said plate and flange forming respectively the other side wall and bottom of the music case when the device is set up as such. The outer face of the plate 1 is also provided with a keeper 9 which is adapted to receive therein the beveled upper end of the inner-most section of the telescoping upright, and when the parts are respectively engaged with one another, a complete music rack or stand is provided.

In order that this device, when knocked down, may be set up for use as a music case, the outer face of the plate 7 and the under face of the bottom or laterally extending flange 8 are provided with pivoted hook members 10, while the outer edges of the flanges or cleats 2 and the lower edge of the plate 1 are provided with studs or the like 11 adapted to receive said hook members in engagement therewith. When the two plates 1 and 7 are brought together, so that the same form the side walls of a case and the flange 8 or music support forms the bottom wall, while the flanges or cleats form the end walls of the case, these hook members may be properly engaged with the studs and the case is formed, ready to receive music therein. It must here be stated, however, that the flanges or cleats 2 on the plate 1 are not the full width thereof and terminate at points a short distance from the edges of said plate, which may be termed the upper edge when the music case is formed, the purpose of which will be hereinafter and more particularly described.

The lower section of the telescoping upright 5 which is substantially rectangular in cross section has one face thereof slightly

projected beyond the side edges to provide flanges or the like 12, these flanges being provided at predetermined points thereon with slots 13. When the intermediate and inner sections of the telescoping upright 5 are telescoped within the outer section, which forms the lower section of the upright when used as a rack, the same may be applied to the upper or open end of the case so formed, the same being received between the side walls thereof, while the flanges 12 are received on the edges of the plates 1 and 7 which may be termed the upper edges thereof when considering the case. Locking members 14 on these upper edges of the walls 1 and 7 are adapted to be received in the slots 13 of said flanges 12 and when turned, retain this member in position on the device, said member forming a substantial top and closure for the case. Also formed on this outer section of the upright or what may be termed the lower section thereof, when set up, is a handle member 15 and through this medium, the device may be carried from place to place when used as a case. This handle member also affords a means for holding the sections in position when setting up the upright, in connection with the usage thereof as a music support and it must here be stated that set screws are provided to secure the sections of said telescoping upright in their various adjusted positions.

In practice, assuming that the device is set up for use as a rack, should it be desired to knock down the same and fold the parts for use as a case, the first operation is to remove the rack proper, that is, the plate 7 from the upper end of the upright. The upright is then disengaged with the foot plate and the sections thereof telescoped within one another until the most compact strip or the like is formed. The plates 1 and 7 are then brought together in the proper manner so that the same in themselves form the side walls and the cleats or flanges thereon form respectively the end walls and bottom of the device, whereupon the hook members 10 are properly engaged with the studs 11. The case, as then set up, is ready to receive music or other articles therein. The telescoped upright is then applied to the upper open end of the case so that the locking members 14 are received through the slots 13 thereof and said locking members are then turned to lock said strip in position on the device and the same is then ready to be carried from place to place.

From the foregoing it will be seen that I have provided a simple, inexpensive and efficient means for carrying out the objects of the invention and while I have particularly described the elements best adapted to perform the functions set forth, it is obvious that various changes in form, proportion and in the minor details of construction may be resorted to without departing from the spirit or sacrificing any of the novel features of the invention.

Having thus described this invention, what is claimed is:—

1. A combined music stand and case comprising a foot piece, a telescoping upright removably mounted thereon, and a music supporting member removably carried on the upper end of said upright, said latter member and said foot piece being adapted to form the end, side and bottom walls of a case, when brought together, and said upright when telescoped, being adapted to form a closure for the case.

2. A combined music stand and case comprising a foot piece, a telescoping upright removably mounted thereon, a music supporting member removably mounted on the upper end of said upright, said latter member and said foot piece being adapted to form the side, end and bottom walls of a case, when the same are properly brought together, said upright, when telescoped, being also adapted to form the upper closure for the case, means carried on said foot piece and music supporting member to lock the same together, when set up as a case, and additional means in connection with said members and a portion of said upright to secure the same together, when said telescoping member is applied to the case as a closure therefor.

3. A combined music stand and case comprising a foot piece, a telescoping upright detachably mounted thereon, a rack removably mounted on the upper end of said upright, said rack and foot piece being adapted for coöperation to form the side, end and bottom walls of a case, means carried on said foot piece and rack to secure the same together, when set up for use as a case, said upright, when telescoped, being adapted for application to the case formed by the foot piece and rack to provide a closure therefor, said upright having the inner section thereof provided with slots, and means carried on the edges of said foot piece and rack which form the upper edges of the case adapted to coöperate with the slots in the aforesaid member to lock the same in position on the device when set up as a case.

In testimony whereof I hereunto affix my signature in the presence of two witnesses.

JALMARI ILVONEN.

Witnesses:
E. L. KLINKERT,
CHARLES CANNELIN.

Copies of this patent may be obtained for five cents each, by addressing the "Commissioner of Patents, Washington, D. C."