PCT WORLD INTELLECTUAL PROPERTY ORGANIZATION
International Bureau

INTERNATIONAL APPLICATION PUBLISHED UNDER THE PATENT COOPERATION TREATY (PCT)

(51) International Patent Classification 6 : F23C 9/08, 7/00, F23D 17/00

A1

(11) International Publication Number: **WO 99/66261**

(43) International Publication Date: 23 December 1999 (23.12.99)

(21) International Application Number: PCT/US99/13767

(22) International Filing Date: 17 June 1999 (17.06.99)

(30) Priority Data:
60/089,570 17 June 1998 (17.06.98) US

(71) Applicant: JOHN ZINK COMPANY, L.L.C. [US/US]; 11920 East Apache, Tulsa, OK 74116 (US).

(72) Inventors: TSIRULNIKOV, Lev; Apartment 22 D, 601 Surf Avenue, Brooklyn, NY 11224 (US). SCHINDLER, Edmund; 159 Tahmore Drive, Fairfield, CT 06432 (US). GUARCO, John; 15 Tyrrell Drive, Wolcott, CT 06716 (US). MOORE, Jon; 76 Duel Drive, Hamden, CT 06518 (US). GAMBURG, Michael; 750–17 Avenue, San Francisco, CA 94121 (US).

(74) Agents: MARSH, James, H., Jr. et al.; Shook, Hardy & Bacon L.L.P., One Kansas City Place, 1200 Main Street, Kansas City, MO 64105–2118 (US).

(81) Designated States: AU, CA, JP, KR, European patent (AT, BE, CH, CY, DE, DK, ES, FI, FR, GB, GR, IE, IT, LU, MC, NL, PT, SE).

Published
With international search report.

(54) Title: LOW NO_x AND LOW CO BURNER AND METHOD FOR OPERATING SAME

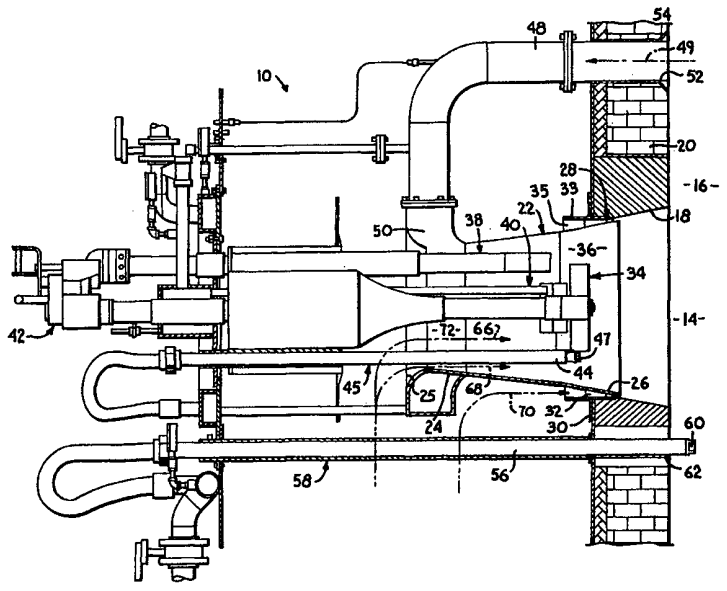

(57) Abstract

A round burner capable of being operated with reduced CO and NO_x emissions includes a venturi tube (22) positioned to direct a flow of air through the burner and into a combustion zone (14) in a combustion chamber (16) through an entrance in a wall (20) of the combustion chamber. The venturi tube has inlet (25) and outlet (26) ends and a throat (24). The burner may include a duct system (48) that includes an inlet (52) disposed in fluid communication with the combustion zone and an outlet (50) disposed in fluid communication with the venturi tube adjacent the throat thereof. Alternatively or cumulatively, the burner may include a fuel gas injector arrangement (58) having an injector nozzle (60) extending through the wall at a location adjacent the combustion zone. Also disclosed is a method for operating the burner to reduce CO and NO_x emissions.

FOR THE PURPOSES OF INFORMATION ONLY

Codes used to identify States party to the PCT on the front pages of pamphlets publishing international applications under the PCT.

AL	Albania	**ES**	Spain	**LS**	Lesotho	**SI**	Slovenia
AM	Armenia	**FI**	Finland	**LT**	Lithuania	**SK**	Slovakia
AT	Austria	**FR**	France	**LU**	Luxembourg	**SN**	Senegal
AU	Australia	**GA**	Gabon	**LV**	Latvia	**SZ**	Swaziland
AZ	Azerbaijan	**GB**	United Kingdom	**MC**	Monaco	**TD**	Chad
BA	Bosnia and Herzegovina	**GE**	Georgia	**MD**	Republic of Moldova	**TG**	Togo
BB	Barbados	**GH**	Ghana	**MG**	Madagascar	**TJ**	Tajikistan
BE	Belgium	**GN**	Guinea	**MK**	The former Yugoslav Republic of Macedonia	**TM**	Turkmenistan
BF	Burkina Faso	**GR**	Greece			**TR**	Turkey
BG	Bulgaria	**HU**	Hungary	**ML**	Mali	**TT**	Trinidad and Tobago
BJ	Benin	**IE**	Ireland	**MN**	Mongolia	**UA**	Ukraine
BR	Brazil	**IL**	Israel	**MR**	Mauritania	**UG**	Uganda
BY	Belarus	**IS**	Iceland	**MW**	Malawi	**US**	United States of America
CA	Canada	**IT**	Italy	**MX**	Mexico	**UZ**	Uzbekistan
CF	Central African Republic	**JP**	Japan	**NE**	Niger	**VN**	Viet Nam
CG	Congo	**KE**	Kenya	**NL**	Netherlands	**YU**	Yugoslavia
CH	Switzerland	**KG**	Kyrgyzstan	**NO**	Norway	**ZW**	Zimbabwe
CI	Côte d'Ivoire	**KP**	Democratic People's Republic of Korea	**NZ**	New Zealand		
CM	Cameroon			**PL**	Poland		
CN	China	**KR**	Republic of Korea	**PT**	Portugal		
CU	Cuba	**KZ**	Kazakstan	**RO**	Romania		
CZ	Czech Republic	**LC**	Saint Lucia	**RU**	Russian Federation		
DE	Germany	**LI**	Liechtenstein	**SD**	Sudan		
DK	Denmark	**LK**	Sri Lanka	**SE**	Sweden		
EE	Estonia	**LR**	Liberia	**SG**	Singapore		

LOW NO_x AND LOW CO BURNER AND METHOD FOR OPERATING SAME

BACKGROUND OF THE INVENTION

Field of the Invention

The invention of the present application relates to burners for large scale industrial applications. Such burners may be adapted for burning gaseous fuels including natural gas. Such burners may also be adapted for burning fuel oil. And in many cases the burners may be adapted for burning both gaseous fuels and fuel oil either alternatively or at the same time. In particular the invention relates to industrial burners which burn fuel gas and/or oil and are specially constructed and engineered for emitting low levels of nitrogen oxide (NO_x) and carbon monoxide (CO) air pollution. The invention also relates to the methodology for operating such burners. More particularly the invention relates to a burner and the methodology for operating the same whereby substantial reductions of CO and NO_x emissions are achieved relative to existing burners.

The Prior Art Background

Many designs exist for delivering fuel and air to a furnace combustion chamber or firebox. Virtually all modern prior art designs are intended to enhance combustion efficiency. In addition, tube metal temperatures and other furnace component limitations must be taken into consideration in designing furnace burners. More recently governmental regulations and social pressures require designers to take into consideration the reduction of CO and NO_x emissions.

One of the best of the more recently developed industrial burners is the Todd Variflame No Internal FGR Injection and No External Gas Injection Burner which uses an array of internal poker tubes for delivering fuel and air to a furnace firebox. This system is the subject matter of U.S. Patent No. 5,860,803 to Schindler et al. which issued on January 19, 1999 (the "'803 patent"). The entirety of the disclosure of the '803 patent is hereby incorporated herein by reference.

In spite of the efforts of many prior art workers in the field, a perfect solution to the CO and NO_x emissions problem remains elusive. Some have tried to reduce NO_x emissions by recirculating flue gas into the firebox. However, when flue gas is recirculated from a downstream location, the costs associated with providing and forcing such recirculation are substantial.

SUMMARY OF THE INVENTION

The present invention provides a device and methodology for efficiently and economically reducing the amount CO and NO_x emission from a combustion chamber without substantially effecting thermal efficiency and/or reaction parameters of the same. In particular the invention provides a novel burner design and novel operating methodology which utilizes internal flue gas recirculation and/or external fuel injection in a venturi tube burner system. More particularly, the invention provides a venturi tube burner system which provides swirled primary and straight line secondary combustion air in the venturi tube and straight line tertiary air outside the venturi tube to provide novel effects in the burner flame formed under the above conditions. Preferably the burner includes internal flue gas recirculation and/or external fuel injection.

As a result of extensive research and development conducted by the present inventors, an improved burner design has been developed whereby it is possible to achieve substantial reductions in CO and NO_x emissions without substantial loss of burner efficiency. Thus, in accordance with one aspect of the present invention, a novel round burner is provided which comprises a venturi tube positioned to direct a flow of air through the burner and into a combustion zone in a combustion chamber through an entrance in a wall of the combustion chamber. The venturi tube has inlet and outlet ends and a throat located between the inlet and outlet ends. The outlet end has a larger internal diameter than either the inlet end or the throat. The outlet end of the venturi tube is positioned adjacent the entrance to the combustion chamber and the inlet end of the venturi tube is positioned further from the entrance than the outlet end.

The novel burner of the invention also provides a duct system that includes at least one inlet disposed in fluid communication with the combustion zone, and at least one outlet disposed in fluid communication with the throat of the venturi tube. The duct system is arranged and adapted to recirculate flue gas from a location within said combustion chamber adjacent said combustion zone and into said venturi tube at a location adjacent said throat, whereby the recirculated flue gas is inducted into and intermixed with said flow of air at said throat of the venturi tube. Thus, NO_x emission reduction may be achieved without the expense of an external flue gas recirculation system.

In another aspect of the invention, the invention provides a round burner which comprises a venturi tube positioned to direct a flow of air through the burner and

into a combustion zone in a combustion chamber through an entrance in a wall of the combustion chamber. The novel burner of this aspect of the invention includes a fuel gas injector arrangement including at least one injector nozzle extending through the wall of the combustion chamber at a location adjacent said combustion zone. Such injector nozzle is in fluid communication with the combustion chamber. The injector nozzle is positioned to direct a flow of fuel gas into said combustion chamber at a location in the wall radially outward of and beyond the inner edge of the entrance.

In yet another aspect of the invention, the novel burner may include both the duct system for recirculated flue gas and the fuel gas injector arrangement described above.

In its more specific aspects, the burner of the present invention may include a first fuel gas nozzle that is located in the venturi tube and which is positioned to introduce a supply of fuel gas into the air flowing through the venturi tube. The burner may also include a swirler positioned so that at least a primary portion of the air flow passes therethrough. Ideally the arrangement of the outlet end of the venturi tube and the swirler may be such that a secondary portion of the air flow does not pass through the swirler. Even more ideally, an annular gap may be provided between the outer periphery at the outlet end of the venturi tube and an inner edge of said entrance. Such gap may be positioned to direct a tertiary air flow around the periphery of the venturi tube and through the entrance into said combustion chamber.

Preferably, at least one first fuel gas nozzle may be positioned centrally of the venturi tube adjacent a longitudinal axis thereof and at a location to introduce fuel gas into said primary portion of the flow of air. At least one fuel gas poker nozzle may also be included at a position to introduce fuel gas into said secondary portion of the flow of air.

The burner of the invention may be equipped to burn either fuel gas or oil.

The invention also provides a method for operating a venturi tube equipped round burner of the sort described above. In accordance with this aspect of the invention, the method comprises directing a flow of air through said venturi tube and into a combustion zone in said combustion chamber through said entrance and recirculating flue gas from a location in said combustion chamber adjacent said combustion zone and into the venturi tube at a location adjacent the throat of the venturi tube, whereby said

recirculated flue gas is inducted into and intermixed with the combustion air flow at the low pressure throat of the venturi tube.

In another aspect of the invention, the method may comprise directing a flow of air through the venturi tube and into a combustion zone in a combustion chamber through an entrance in a wall of the combustion chamber and injecting a flow of fuel gas into said combustion chamber at a location radially outward and beyond the inner edge of the entrance and adjacent to said combustion zone. Furthermore, the novel method may include both the recirculation of flue gas and external fuel gas injection as described above.

In a more specific sense, the method may include a step of introducing a first supply of fuel gas into said flow of air. The method also may include a step of passing at least a primary portion of said flow of air through a swirler. Even more specifically, the method may be such that a secondary portion of said flow of air does not pass through the swirler.

In another important preferred aspect of the invention, the method may include a step of causing a tertiary air stream to flow around the periphery of the venturi tube, through a gap provided between the large end of the venturi tube and an inner edge of the entrance to the combustion chamber, and on into the combustion zone.

In another preferred aspect of the invention, the method for operating a venturi equipped round burner may include a step of introducing a first supply of fuel gas into the primary portion of the flow of air, and introducing a second separate supply of fuel gas into said secondary portion of the flow of air.

BRIEF DESCRIPTION OF THE DRAWINGS

FIGURE 1 is a sectional elevational view of an embodiment of a combustion chamber burner of the invention and its associated elements taken essentially along the vertical centerline of the combustion chamber windbox;

FIGURE 2 is a front end elevational view of the burner of FIG. 1;

FIGURE 3 is a graph illustrating the number of scanner signals and the air pressure drop data obtained in a combustion chamber burner of the invention as the ratio of swirled air flow to straight air flow is changed;

FIGURE 4 is a graph illustrating the amount of the relative available internal flue gas recirculation flow measured when the ratio of primary and tertiary air flows is changed;

FIGURE 5 is a graph illustrating the improved performance of the burner of the invention in terms of achieving reduction of CO and NO_x emissions as the ratio between excess air factors in the secondary and tertiary air flows is varied;

FIGURE 6 is a graph illustrating the improved performance of the burner of the invention in terms of achieving reduction of CO and NO_x emissions as the injector fuel gas flow rate is varied with respect to the total fuel gas flow rate; and

FIGURE 7 is a graph illustrating the improved performance of the burner of the invention in terms of achieving reduction of NO_x emissions when internal flue gas is recirculated.

DETAILED DESCRIPTION OF THE PREFERRED EMBODIMENTS

A burner assembly which embodies the features, concepts and principles of the invention is illustrated in FIG. 1 where it is identified by the reference numeral 10. As is conventional and well known to those of ordinary skill in the relevant art, the burner 10 may be surrounded by a windbox 12 which provides combustion air to the burner at a pressure sufficient to cause it to flow into the combustion zone 14 in a combustion chamber or firebox 16 through an entrance 18 in a wall 20 of the combustion chamber 16. As is also well known to those of ordinary skill in the art, an entrance, such as the entrance 18, may preferably be in the form of a generally circular opening which extends through the wall 20 of combustion chamber 16.

The burner 10 is equipped with an elongated venturi tube 22 that having an inlet end 25 that is spaced from entrance 18 and a outlet end 26 that is positioned adjacent to and in alignment with entrance 18. The venturi tube 22 also has a throat 24 disposed between inlet end 25 and outlet end 26. As would be well known to the routineer in the burner art, the venturi tube 22 may generally be circular in cross-sectional configuration, and the outlet end 26 thereof should preferably and generally be larger in diameter than either the inlet end 25 or the throat 24.

As illustrated in FIG. 1, outlet end 26 of venturi tube 22 is preferably positioned within and surrounded by entrance 18. Additionally, the outer periphery 28 of outlet end 26 is smaller in diameter than the annular inner edge surface 30 of entrance

18. Thus, an annular gap 32 is presented between the outer periphery 28 of the outlet end 26 of the venturi tube 22 and the inner edge surface 30. An annular shroud 33 is positioned within entrance 18 and is mounted on edge surface 30 so as to provide a mouth 35 for the gap 32.

The burner assembly 10 is also provided with a swirler 34 which is positioned centrally within the outlet end 28 of the venturi tube 22. As can be clearly seen in FIG. 1, the outer diameter of the swirler 34 is smaller than the internal diameter of the venturi tube 22 at the outlet end 28 of the latter. This provides an annular space 36 which surrounds the swirler 34 within the venturi tube 22.

The burner assembly 10 of the invention also may preferably be provided with a conventional ignitor 38 and one or more central fuel gas nozzles 40. Only a single nozzle is shown in FIG. 1; however, one of ordinary skill in the burner art would understand that the burner 10 may include a plurality of central fuel gas nozzles spaced evenly around the longitudinal axis of the venturi tube 22. The determinative factor in choosing the number of central fuel gas nozzles to use is simply to make sure that the central or primary gas flow is evenly distributed in the combustion air. The nozzle or nozzles 40, as the case may be, provide fuel gas to the air flowing through the center of the venturi tube 22. The burner assembly 10 may also preferably be equipped with a conventional steam operated fuel oil atomizer unit 42 so that the burner 10 is adapted to burn fuel oil as well as gaseous fuels including natural gas.

In accordance with the concepts and principles of the invention, the burner assembly includes at least one fuel gas poker 44 for delivering fuel gas to the air traveling through the venturi tube 22 on its way to the combustion zone 14. Although only a single poker 44 is shown in FIG. 1, the burner assembly 10 may preferably include three or more fuel gas pokers 44 spaced evenly around the inside of the venturi tube 22. Conventionally the burner may include six to eight pokers 44 as illustrated in FIG. 2; however, if the invention of the '803 patent is employed, the burner 10 may need only three pokers 44. The pokers 44 may each include an elongated tube 45 and a nozzle 47, and the same may conventionally be linked together by a fuel gas manifold 46 as shown in FIG.2. The principal design consideration in selecting the correct number of pokers for any given installation is that the fuel gas be distributed evenly around the entire circumference of the venturi tube 22.

Desirably burner assembly 10 of the invention may include one or more ducts 48 for internal recirculating flue gas 49 from a point within the combustion chamber 16 adjacent combustion zone 14 to the air flowing through venturi tube 22 at the low pressure zone 72 in throat 24 thereof. A single duct 48 is shown in FIG. 1 for illustrative purposes. However, burner assembly 10 preferably may include four ducts 48 spaced 90 degrees apart around the periphery of the venturi tube 22 as best shown in FIG 2. Again, the principal design consideration in selecting the correct number of ducts 48 for a given application is simply that the recirculated flue gas be distributed evenly around the entire circumference of the venturi tube. Ducts 48 may each be provided with an outlet 50 which is connected to the venturi tube at a point adjacent to the low pressure zone 72 at the throat 24 of the venturi tube 22 so that recirculated flue gas 49 is inducted into the venturi tube 22. Each duct 48 also preferably has an inlet 52 which is in fluid communication with the interior of the combustion chamber via an opening 54 in wall 20. Thus, flue gas 49 from adjacent the combustion zone 14 in chamber 16 may be inducted into the air flowing through the venturi tube 22 and intermixed therewith at throat 24.

As is illustrated in FIG. 1, the burner 10 of the invention may also be provided with at least one external fuel gas injector 56. The injector 56 may preferably include an elongated tube 58 and a nozzle 60. The nozzle 60 protrudes through an opening 62 which extends through wall 20 such that the nozzle 60 is positioned in outwardly spaced relationship relative to entrance 18. That is to say, opening 62 is positioned outwardly beyond the inner edge surface 30 of entrance 18 and therefore the nozzle 60 is positioned to direct a flow of fuel gas into said combustion chamber 16 at a location adjacent to and externally of the combustion air flowing into combustion zone 14.

A single fuel gas injector 56 is shown in FIG. 1 for illustrative purposes. However, as shown in FIG. 2, the burner assembly 10 may preferably include four to eight fuel gas injectors 56 spaced 45 degrees apart around the periphery of the venturi tube 22. Again, the principal design consideration in selecting the correct number of fuel gas injectors 56 for a given application is that the fuel gas be distributed evenly around the entire periphery of the combustion zone 14. The injectors 56 are provided with a manifold 64 which distributes fuel gas thereto.

In operation, combustion air enters the burner 10 from windbox 12 and is divided into three separate and distinct portions. The flow path of primary air is designated by the arrow 66, the flow path of secondary air is designated by the arrow 68 and the flow path of tertiary air is designated by the arrow 70. As dictated by the shape and size of the venturi tube 22, the shape and configuration of the swirler 34 and the shape and size of the entrance 18, primary air 66 moves to the center of the venturi tube 22 where it is mixed with fuel gas from the centrally located fuel nozzle 40 and caused to flow through the swirler 34 which rotates in a manner well known to the routineer in the burner art. Thus, primary air 66 and central fuel gas from nozzle 40 are thoroughly mixed and agitated as the same are directed into the center core of the combustion zone 14.

Secondary air 68 moves in a generally straight line through the venturi tube 22 and passes into the combustion zone. As the secondary air 68 passes around the swirler 34, it is in the shape of an annular envelope that surrounds the swirler 34 and the swirled primary air 66. As can be seen viewing FIG.1, the fuel gas pokers 44 are positioned radially outwardly relative to the swirler 34 and such that the fuel gas from the poker nozzles 47 is intermixed with the secondary air 68. Thus, straight line secondary air 68 and the fuel gas from poker nozzles 47 are directed in a straight line into the combustion zone 14 at a position which is radially outward of the center of the latter.

Tertiary air 70 moves in a straight line around the periphery of the venturi tube 22 and is guided by the mouth 35 so that it passes through the gap 32 between the outlet end 26 of the venturi tube 22 and the inner edge surface 30 of the entrance 18. The tertiary air 70 is in the shape of an annulus which surrounds the venturi tube 22 and the secondary air 68 as it is introduced into the combustion zone 14.

Fuel gas from the injectors 56 is introduced into the combustion chamber 16 at a position which is radially outward relative to the center of the combustion zone 14 and to the primary, secondary and tertiary air flows 66, 68 and 70.

Generally speaking, the outlet end of the venturi tube 22 may preferably be about 6 to about 40 inches in diameter. The shape of the venturi tube 22 is not necessarily critical to the operation of the burner 10. That is to say, the shape of the venturi tube is in some measure dictated by the desired air flow rate characteristics. However, it has been determined experimentally that the venturi tube 22 may preferably be shaped such that the ratio of the diameter of the throat 24 to the diameter of the outlet

end 26 may preferably be in the range of from about 1:1.2 to about 1:1.6. It has also been determined experimentally that the ratio of the total cross-sectional area of the annular gap 32 to the total cross-sectional area of the outlet end 26 of the venturi tube 22 may preferably, but not necessarily, be in the range of from about 1:6 to about 1:8. It is also preferred, but not necessarily required, that the swirler 34 be positioned at a distance from the outlet end 26 which is within the range of from about 0.4 to about 0.6 times the internal diameter of outlet end 26.

The difference between the forward velocity of the swirled primary air stream 66 and the forward velocity of the straight line secondary air stream 68 is associated with the physical design of the burner. Conceptually, all of the primary air stream 66 passes through the swirler 34. On the other hand, the secondary stream 68 passes around the swirler 34 and theoretically none of it passes through the swirler 34. Clearly none of the tertiary air flow 70 passes through the swirler 34. The swirler 34 imposes a degree of aerodynamic resistance on the primary stream 66 passing therethrough. Thus, the velocities of the straight line streams 68 and 70 are greater than the velocity of the primary stream 66. As can be seen from FIG. 3, when the ratio of swirled primary air flow to straight line air flow (secondary + tertiary) is greater than about 0.2, air resistance increase rapidly. On the other hand, when the ratio of swirled primary air flow to straight line air flow is less than about 0.08, flame stability problems occur. From these parameters, the preferred relative air flow velocities may be determined. Thus, in actual operation, it is preferred that the ratio of the forward velocity of the primary swirled air stream 66 to the forward velocities of the straight line air streams 68 and 70 should be in the range of from about 1:1.1 to about 1:1.5.

As set forth above, the preferred lower limit of the tertiary air flow velocity is about 1.1 times the primary air velocity. In accordance with FIG. 4, an increase in the velocity of the tertiary air velocity is accompanied by a decrease in the amount of recirculated flue gas 49 which can be induced into the combustion air by the venturi effect at low pressure zone 72 in venturi tube 22. There is a comparatively small influence on the amount of flue gas recirculated by induction when the ratio of the velocities of the tertiary and primary air streams is 1.5 or less. However, when this ratio exceeds 1.5, the recirculated flue gas rate drops off quickly. This phenomena also supports the preference for a primary air velocity to tertiary air velocity ratio of 1.5 or less. In accordance with the invention, the recirculated internal flue gas rate should

preferably be within the range of from about 4% to about 8%, inclusive, based on the total amount of combustion air supplied to the burner. The effectiveness of such recirculation is apparent from FIG. 7.

The center core of the burner flame is located in the central part of the combustion zone 14. This part of the flame, which is fed primarily by the primary air flow and the fuel from the central fuel nozzles 40, is responsible for stability and vibration of the entire flame. In addition, the core of the flame plays a role as a flame pilot whenever the heat load is reduced to a minimum. It is well known to the routineer in the burner art that the most stable flame occurs when the conditions in the burner are stoichiometric. From a practical viewpoint, however, flames are sufficiently stable whenever the amount of air is at least 70% of the amount that is theoretically sufficient to burn all of the fuel and no greater than 110% of such amount. Thus, the fuel/air ratio in the primary air stream should be maintained such that the available oxygen ranges from about 70% to about 110% of theoretical at the time the primary air stream enters the combustion zone.

As can be seen from FIG. 5, however, there is an effective reduction in emitted NO_x without a corresponding increase in emitted CO when the ratio of the excess air factor in the secondary stream 68 to the excess air factor in the tertiary air stream 70 is in the range of from about 1.3:1 to about 2.7:1. When this ratio is less than about 1.3:1, NO_x reduction is negligible. When this ratio is above about 2.7, CO emission becomes unacceptable. Coupled with the foregoing information, one must take into consideration the fact that the state of the art knowledge is that the local excess air factor should preferably never be more than 2.0 to prevent local cooling of the flame, and should preferably never be less than about 0.7 to avoid the unacceptable concentrations of incompletely combusted products in the flue gas. Based on these considerations, and in accordance with the concepts and principles of the present invention, it has been determined that the excess air factor provided by the primary stream 66 should preferably be in the range of from about 0.7 to about 1.1, that the excess air factor provided by the secondary stream 68 should preferably be in the range of from about 0.7 to about 2, and that the excess air factor provided by the tertiary stream 70 should preferably be in the range of from about 0.5 to about 0.7.

With reference to the foregoing considerations the preferred relative primary fuel gas flow can be determined. Thus, the primary fuel gas flow is a

multiplication product of the relative primary air flow and the primary excess air factor, which is (0.08-0.20) x (0.7-1.1) = (0.056-0.22). It is known that in order to avoid stability and vibration problems when the heat load is reduced, such reduction should be accompanied by an increase in the proportion of the fuel gas fed to the core of the flame. Usually, under full load conditions, the amount of fuel fed to the core of the flame should be about 6% of the total fuel flow rate. Tests have shown that the amount of fuel gas fed to the center of the flame should be increased at a rate which is about the fourth degree root of the burner turndown. Thus, to accommodate a standard turndown of 12.5:1, the fuel fed to the core of the flame should amount to 6^{-4} x 12.5 = 19.6% of the total fuel rate. So the amount of the total fuel in the primary air stream 66 should preferably range from about 6% to about 19%. These numbers are comparatively close to the numbers calculated above.

With reference to FIG. 6, it can be seen that a desirable degree of NO_x reduction is achieved without an unacceptable increase in CO emissions when the ratio of the fuel gas rate from the injector nozzles 60 ranges from about 65% to about 85% of the total fuel rate. Thus, under full load, the secondary fuel gas flow from the poker nozzles 47 should preferably range from about 9% to about 29% of the total fuel gas flow. Under partial loads, the secondary fuel gas flow from the poker nozzles 47 should preferably be a little less than about 5%of the total fuel gas flow. So the overall secondary fuel gas flow rate from the poker nozzles 47 should preferably range from about 5% to about 29% of the total fuel gas flow.

In sum, and in accordance with the concepts and principles of the present invention, it has been determined that the flow rate of the primary fuel gas from nozzles 40 should preferably be in the range of from about 6% to about 19% of the total fuel supplied to the burner, that the flow rate of the secondary fuel fed from poker nozzles 47 should preferably be in the range of from about 5% to about 29% of the total fuel supplied to the burner, and that the flow rate of the tertiary fuel supplied from nozzles 60 should preferably be in the range of from about 52% to about 89% of the total fuel supplied to the burner.

It has also been determined in accordance with the principles and concepts of the invention, that the ratio of recirculated internal flue gas 49 to total combustion air flow (66, 68 and 70) should preferably be in the range of from about 0.04:1 to about 0.08:1. This factor is determined by a balance between flame stability and emission

reduction and is controlled by the various flow rates of the combustion air as discussed above.

WE CLAIM:

1. A round burner capable of reduced CO and NO_x emissions comprising: a venturi tube positioned to direct a flow of air through the burner and into a combustion zone in a combustion chamber through an entrance in a wall of the combustion chamber, said venturi tube having an inlet and outlet ends and a throat located between said ends, said outlet end having a larger internal diameter than said inlet end and said throat, said outlet end of the venturi tube being positioned adjacent said entrance to the combustion chamber, said inlet end of the venturi tube being positioned further from said entrance than said outlet end of the venturi tube; and a duct system including at least one inlet disposed in fluid communication with the combustion zone and at least one outlet disposed in fluid communication with the venturi tube throat, said system being arranged and adapted to recirculate a stream of flue gas from a location in said combustion chamber adjacent said combustion zone and into said venturi tube at a location adjacent said throat, whereby said recirculated stream of flue gas is intermixed with said flow of air at said throat of the venturi tube.

2. A round burner as set forth in claim 1, wherein said burner includes at least one first fuel gas nozzle located in said venturi tube and positioned to introduce a supply of fuel gas into said flow of air.

3. A round burner as set forth in claim 1, wherein said burner includes a swirler positioned so that at least a primary portion of said flow of air passes therethrough.

4. A round burner as set forth in claim 3, wherein the arrangement of the outlet end of the venturi tube and the swirler is such that a secondary portion of said flow of air does not pass through the swirler.

5. A round burner as set forth in claim 2, wherein said burner includes a swirler positioned so that at least a primary portion of said flow of air passes therethrough.

6. A round burner as set forth in claim 5, wherein the arrangement of the outlet end of the venturi tube and the swirler is such that a secondary portion of said flow of air does not pass through the swirler.

7. A round burner as set forth in claim 3, wherein said venturi tube has an outer periphery and said entrance has an inner annular edge, said periphery and said inner edge defining an annular gap therebetween, said gap being positioned to direct a tertiary air flow around the periphery of the venturi tube and through the entrance into said combustion chamber.

8. A round burner as set forth in claim 4, wherein said venturi tube has an outer periphery and said entrance has an inner annular edge, said periphery and said inner edge defining an annular gap therebetween, said gap being positioned to direct a tertiary air flow around the periphery of the venturi tube and through the entrance into said combustion chamber.

9. A round burner as set forth in claim 5, wherein said venturi tube has an outer periphery and said entrance has an inner annular edge, said periphery and said inner edge defining an annular gap therebetween, said gap being positioned to direct a tertiary air flow around the periphery of the venturi tube and through the entrance into said combustion chamber.

10. A round burner as set forth in claim 6, wherein said venturi tube has an outer periphery and said entrance has an inner annular edge, said periphery and said inner edge defining an annular gap therebetween, said gap being positioned to direct a tertiary air flow around the periphery of the venturi tube and through the entrance into said combustion chamber.

11. A round burner as set forth in claim 6, wherein said at least one first fuel gas nozzle is positioned centrally of the venturi tube adjacent a longitudinal axis thereof and at a location to introduce fuel gas into said primary portion of the flow of air, and said burner includes at least one fuel gas poker nozzle positioned to introduce fuel gas into said secondary portion of the flow of air.

12. A round burner as set forth in claim 10, wherein said at least one first fuel gas nozzle is positioned centrally of the venturi tube adjacent a longitudinal axis thereof and at a location to introduce fuel gas into said primary portion of the flow of air, and said burner includes at least one fuel gas poker nozzle positioned to introduce fuel gas into said secondary portion of the flow of air.

13. A round burner as set forth in claim 1, wherein said burner is adapted for burning fuel oil introduced into said venturi tube.

14. A round burner as set forth in claim 1, wherein said burner is adapted for burning natural gas.

15. A round burner as set forth in claim 13, wherein said burner is adapted for burning natural gas.

16. A round burner capable of reduced CO and NO_x emissions comprising: a venturi tube positioned to direct a flow of air through the burner and into a combustion zone in a combustion chamber through an entrance in a wall of the combustion chamber, said venturi tube having an outer periphery and inlet and outlet ends, said outlet end of the venturi tube having a larger internal diameter than said inlet end, said outlet end of the venturi tube being positioned adjacent said entrance to the combustion chamber, said inlet end of the venturi tube being positioned further from said entrance than said outlet end of the venturi tube, said entrance having an inner edge; and a fuel gas injector arrangement including at least one injector nozzle extending through said wall at a location adjacent said combustion zone, said nozzle being in fluid communication with said combustion chamber and positioned to direct a flow of fuel gas into said combustion chamber at a location in the wall beyond said inner edge of the entrance.

17. A round burner as set forth in claim 16, wherein said burner includes at least one first fuel gas nozzle located in said venturi and positioned to introduce a supply of fuel gas into said flow of air.

18. A round burner as set forth in claim 16, wherein said burner includes a swirler positioned so that at least a primary portion of said flow of air passes therethrough.

19. A round burner as set forth in claim 18, wherein the arrangement of the outlet end of the venturi tube and the swirler is such that a secondary portion of said flow of air does not pass through the swirler.

20. A round burner as set forth in claim 17, wherein said burner includes a swirler positioned so that at least a primary portion of said flow of air passes therethrough.

21. A round burner as set forth in claim 20, wherein the arrangement of the outlet end of the venturi tube and the swirler is such that a secondary portion of said flow of air does not pass through the swirler.

22. A round burner as set forth in claim 18, wherein an annular gap is provided between said outer periphery at the outlet end of the venturi tube and said inner edge, said gap being positioned to direct a tertiary air flow around the periphery of the venturi tube and through the entrance into said combustion chamber, said injector nozzle being positioned radially outside said gap.

23. A round burner as set forth in claim 19, wherein an annular gap is provided between said outer periphery at the outlet end of the venturi tube and said inner edge, said gap being positioned to direct a tertiary air flow around the periphery of the venturi tube and through the entrance into said combustion chamber, said injector nozzle being positioned radially outside said gap.

24. A round burner as set forth in claim 20, wherein an annular gap is provided between said outer periphery at the outlet end of the venturi tube and said inner edge, said gap being positioned to direct a tertiary air flow around the periphery of the venturi tube and through the entrance into said combustion chamber, said injector nozzle being positioned radially outside said gap.

25. A round burner as set forth in claim 21, wherein an annular gap is provided between said outer periphery at the outlet end of the venturi tube and said inner edge, said gap being positioned to direct a tertiary air flow around the periphery of the venturi tube and through the entrance into said combustion chamber, said injector nozzle being positioned radially outside said gap.

26. A round burner as set forth in claim 21, wherein said at least one first fuel gas nozzle is positioned centrally of the venturi tube adjacent a longitudinal axis thereof and at a location to introduce fuel gas into said primary portion of the flow of air, and said burner includes at least one fuel gas poker nozzle positioned to introduce fuel gas into said secondary portion of the flow of air.

27. A round burner as set forth in claim 25, wherein said at least one first fuel gas nozzle is positioned centrally of the venturi tube adjacent a longitudinal axis thereof and at a location to introduce fuel gas into said primary portion of the flow of air, and said burner includes at least one fuel gas poker nozzle positioned to introduce fuel gas into said secondary portion of the flow of air.

28. A round burner as set forth in claim 16, wherein said burner is adapted for burning fuel oil introduced into said flow of air.

29. A round burner as set forth in claim 1, wherein said tube has an outer periphery and the entrance has an inner edge, and said burner comprises a fuel gas injector arrangement including an injector nozzle extending through said wall at a location adjacent said combustion zone, said nozzle being in fluid communication with said combustion chamber and positioned to direct a flow of fuel gas into said combustion chamber at a location in the wall beyond said inner edge of the entrance.

30. A round burner as set forth in claim 29, wherein said burner includes at least one first fuel gas nozzle located in said venturi tube and positioned to introduce a supply of fuel gas into said flow of air.

31. A round burner as set forth in claim 29, wherein said burner includes a swirler positioned so that at least a primary portion of said flow of air passes therethrough.

32. A round burner as set forth in claim 31, wherein the arrangement of the outlet end of the venturi tube and the swirler is such that a secondary portion of said flow of air does not pass through the swirler.

33. A round burner as set forth in claim 30, wherein said burner includes a swirler positioned so that at least a primary portion of said flow of air passes therethrough.

34. A round burner as set forth in claim 33, wherein the arrangement of the outlet end of the venturi tube and the swirler is such that a secondary portion of said flow of air does not pass through the swirler.

35. A round burner as set forth in claim 31, wherein an annular gap is provided between said outer periphery at the outlet end of the venturi tube and said inner edge, said gap being positioned to direct a tertiary air flow around the periphery of the venturi tube and through the entrance into said combustion chamber, said injector nozzle being positioned radially outside said gap.

36. A round burner as set forth in claim 32, wherein an annular gap is provided between said outer periphery at the outlet end of the venturi tube and said inner edge, said gap being positioned to direct a tertiary air flow around the periphery of the venturi tube and through the entrance into said combustion chamber, said injector nozzle being positioned radially outside said gap.

37. A round burner as set forth in claim 33, wherein an annular gap is provided between said outer periphery at the outlet end of the venturi tube and said inner edge, said gap being positioned to direct a tertiary air flow around the periphery of the venturi tube and through the entrance into said combustion chamber, said injector nozzle being positioned radially outside said gap.

38. A round burner as set forth in claim 34, wherein an annular gap is provided between said outer periphery at the outlet end of the venturi tube and said inner edge, said gap being positioned to direct a tertiary air flow around the periphery of the venturi tube and through the entrance into said combustion chamber, said injector nozzle being positioned radially outside said gap.

39. A round burner as set forth in claim 34, wherein said at least one first fuel gas nozzle is positioned centrally of the venturi tube adjacent a longitudinal axis thereof and at a location to introduce fuel gas into said primary portion of the flow of air, and said burner includes at least one fuel gas poker nozzle positioned to introduce fuel gas into said secondary portion of the flow of air.

40. A round burner as set forth in claim 38, wherein said at least one first fuel gas nozzle is positioned centrally of the venturi tube adjacent a longitudinal axis thereof and at a location to introduce fuel gas into said primary portion of the flow of air, and said burner includes at least one fuel gas poker nozzle positioned to introduce fuel gas into said secondary portion of the flow of air.

41. A round burner as set forth in claim 29, wherein said burner is adapted for burning fuel oil introduced into said flow of air.

42. A round burner as set forth in claim 30, wherein said burner is adapted for burning fuel oil introduced into said flow of air.

43. A method for operating a venturi tube equipped round burner with reduced CO and NO_x emissions, said venturi tube having an inlet end, an outlet end and a throat disposed between said inlet end and said outlet end, said outlet end of the venturi tube having a larger internal diameter than said inlet end and said throat, said outlet end of the venturi tube being positioned adjacent an entrance to a combustion chamber, said inlet end of the venturi tube being positioned further from said entrance than said outlet end of the venturi tube, said method comprising: directing a flow of air through said venturi tube and into a combustion zone in said combustion chamber through said entrance; and recirculating flue gas from a location in said combustion chamber adjacent said

combustion zone and into said venturi tube at a location adjacent said throat, whereby said recirculated flue gas is intermixed with said flow of air at said throat of the venturi tube.

44. A method for operating a venturi tube equipped round burner as set forth in claim 43, wherein is included a step of introducing a first supply of fuel gas into said flow of air.

45. A method for operating a venturi tube equipped round burner as set forth in claim 43, wherein is included a step of passing at least a primary portion of said flow of air through a swirler.

46. A method for operating a venturi tube equipped round burner as set forth in claim 45, wherein a secondary portion of said flow of air does not pass through the swirler.

47. A method for operating a venturi tube equipped round burner as set forth in claim 44, wherein is included a step of passing at least a primary portion of said flow of air through a swirler.

48. A method for operating a venturi tube equipped round burner as set forth in claim 47, wherein a secondary portion of said flow of air does not pass through the swirler.

49. A method for operating a venturi tube equipped round burner as set forth in claim 45, wherein said venturi tube has an outer periphery and an annular gap is provided between said outer periphery at the outlet end of the venturi tube and an inner edge of said entrance, said method including a step of causing a tertiary air stream to flow around the periphery of the venturi tube, through the gap, and into said combustion chamber.

50. A method for operating a venturi tube equipped round burner as set forth in claim 46, wherein said venturi tube has an outer periphery and an annular gap is

provided between said outer periphery at the outlet end of the venturi tube and an inner edge of said entrance, said method including a step of causing a tertiary air stream to flow around the periphery of the venturi tube, through the gap, and into said combustion chamber.

51. A method for operating a venturi tube equipped round burner as set forth in claim 47, wherein said venturi tube has an outer periphery and an annular gap is provided between said outer periphery at the outlet end of the venturi tube and an inner edge of said entrance, said method including a step of causing a tertiary air stream to flow around the periphery of the venturi tube, through the gap, and into said combustion chamber.

52. A method for operating a venturi tube equipped round burner as set forth in claim 48, wherein said venturi tube has an outer periphery and an annular gap is provided between said outer periphery at the outlet end of the venturi tube and an inner edge of said entrance, said method including a step of causing a tertiary air stream to flow around the periphery of the venturi tube, through the gap, and into said combustion chamber.

53. A method for operating a venturi tube equipped round burner as set forth in claim 48, wherein said first supply of fuel gas is introduced into said primary portion of the flow of air, and a second separate supply of fuel gas is introduced into said secondary portion of the flow of air.

54. A method for operating a venturi tube equipped round burner as set forth in claim 52, wherein said first supply of fuel gas is introduced into said primary portion of the flow of air, and a second separate supply of fuel gas is introduced into said secondary portion of the flow of air.

55. A method for operating a venturi tube equipped round burner as set forth in claim 43, wherein a fuel oil is introduced into said flow of air.

56. A method for operating a venturi tube equipped round burner with reduced CO and NO_x emissions, said method comprising: directing a flow of air through the venturi tube and into a combustion zone in a combustion chamber through an entrance in a wall of the combustion chamber, said entrance having an inner edge; and injecting a flow of fuel gas into said combustion chamber at a location radially beyond said inner edge of the entrance and adjacent said combustion zone.

57. A method for operating a venturi tube equipped round burner as set forth in claim 56, wherein is included a step of introducing a first supply of fuel gas into said flow of air.

58. A method for operating a venturi tube equipped round burner as set forth in claim 56, wherein is included a step of passing at least a primary portion of said flow of air through a swirler.

59. A method for operating a venturi tube equipped round burner as set forth in claim 56, wherein a secondary portion of said flow of air does not pass through the swirler.

60. A method for operating a venturi tube equipped round burner as set forth in claim 57, wherein is included a step of passing at least a primary portion of said flow of air through a swirler.

61. A method for operating a venturi tube equipped round burner as set forth in claim 60, wherein a secondary portion of said flow of air does not pass through the swirler.

62. A method for operating a venturi tube equipped round burner as set forth in claim 58, wherein said venturi tube has an outer periphery and an annular gap is provided between said outer periphery at the outlet end of the venturi tube and said inner edge of said entrance, said method including a step of causing a tertiary air stream to flow around the periphery of the venturi tube, through the gap, and into said combustion chamber.

63. A method for operating a venturi tube equipped round burner as set forth in claim 59, wherein said venturi tube has an outer periphery and an annular gap is provided between said outer periphery at the outlet end of the venturi tube and said inner edge of said entrance, said method including a step of causing a tertiary air stream to flow around the periphery of the venturi tube, through the gap, and into said combustion chamber.

64. A method for operating a venturi tube equipped round burner as set forth in claim 60, wherein said venturi tube has an outer periphery and an annular gap is provided between said outer periphery at the outlet end of the venturi tube and said inner edge of said entrance, said method including a step of causing a tertiary air stream to flow around the periphery of the venturi tube, through the gap, and into said combustion chamber.

65. A method for operating a venturi tube equipped round burner as set forth in claim 61, wherein said venturi tube has an outer periphery and an annular gap is provided between said outer periphery at the outlet end of the venturi tube and said inner edge of said entrance, said method including a step of causing a tertiary air stream to flow around the periphery of the venturi tube, through the gap, and into said combustion chamber.

66. A method for operating a venturi tube equipped round burner as set forth in claim 61, wherein said first supply of fuel gas is introduced into said primary portion of the flow of air, and a second separate supply of fuel gas is introduced into said secondary portion of the flow of air.

67. A method for operating a venturi tube equipped round burner as set forth in claim 65, wherein said first supply of fuel gas is introduced into said primary portion of the flow of air, and a second separate supply of fuel gas is introduced into said secondary portion of the flow of air.

68. A method for operating a venturi tube equipped round burner as set forth in claim 56, wherein a fuel oil is introduced into said flow of air.

69. A method for operating a venturi tube equipped round burner as set forth in claim 43, wherein said entrance has an inner edge and said method comprises injecting a flow of fuel gas into said combustion chamber at a location radially beyond said inner edge of the entrance and adjacent said combustion zone.

70. A method for operating a venturi tube equipped round burner as set forth in claim 69, wherein is included a step of introducing a first supply of fuel gas into said flow of air.

71. A method for operating a venturi tube equipped round burner as set forth in claim 69, wherein is included a step of passing at least a primary portion of said flow of air through a swirler.

72. A method for operating a venturi tube equipped round burner as set forth in claim 71, wherein a secondary portion of said flow of air does not pass through the swirler.

73. A method for operating a venturi tube equipped round burner as set forth in claim 70, wherein is included a step of passing at least a primary portion of said flow of air through a swirler.

74. A method for operating a venturi tube equipped round burner as set forth in claim 73, wherein a secondary portion of said flow of air does not pass through the swirler.

75. A method for operating a venturi tube equipped round burner as set forth in claim 71, wherein said venturi tube has an outer periphery and an annular gap is provided between said outer periphery at the outlet end of the venturi tube and said inner edge of said entrance, said method including a step of causing a tertiary air stream to flow around the periphery of the venturi tube, through the gap, and into said combustion chamber.

76. A method for operating a venturi tube equipped round burner as set forth in claim 72, wherein said venturi tube has an outer periphery and an annular gap is provided between said outer periphery at the outlet end of the venturi tube and said inner edge of said entrance, said method including a step of causing a tertiary air stream to flow around the periphery of the venturi tube, through the gap, and into said combustion chamber.

77. A method for operating a venturi tube equipped round burner as set forth in claim 73, wherein said venturi tube has an outer periphery and an annular gap is provided between said outer periphery at the outlet end of the venturi tube and said inner edge of said entrance, said method including a step of causing a tertiary air stream to flow around the periphery of the venturi tube, through the gap, and into said combustion chamber.

78. A method for operating a venturi tube equipped round burner as set forth in claim 74, wherein said venturi tube has an outer periphery and an annular gap is provided between said outer periphery at the outlet end of the venturi tube and said inner edge of said entrance, said method including a step of causing a tertiary air stream to flow around the periphery of the venturi tube, through the gap, and into said combustion chamber.

79. A method for operating a venturi tube equipped round burner as set forth in claim 74, wherein said first supply of fuel gas is introduced into said primary portion of the flow of air, and a second separate supply of fuel gas is introduced into said secondary portion of the flow of air.

80. A method for operating a venturi tube equipped round burner as set forth in claim 78, wherein said first supply of fuel gas is introduced into said primary portion of the flow of air, and a second separate supply of fuel gas is introduced into said secondary portion of the flow of air.

81. A method for operating a venturi tube equipped round burner as set forth in claim 69, wherein a fuel oil is introduced into said flow of air.

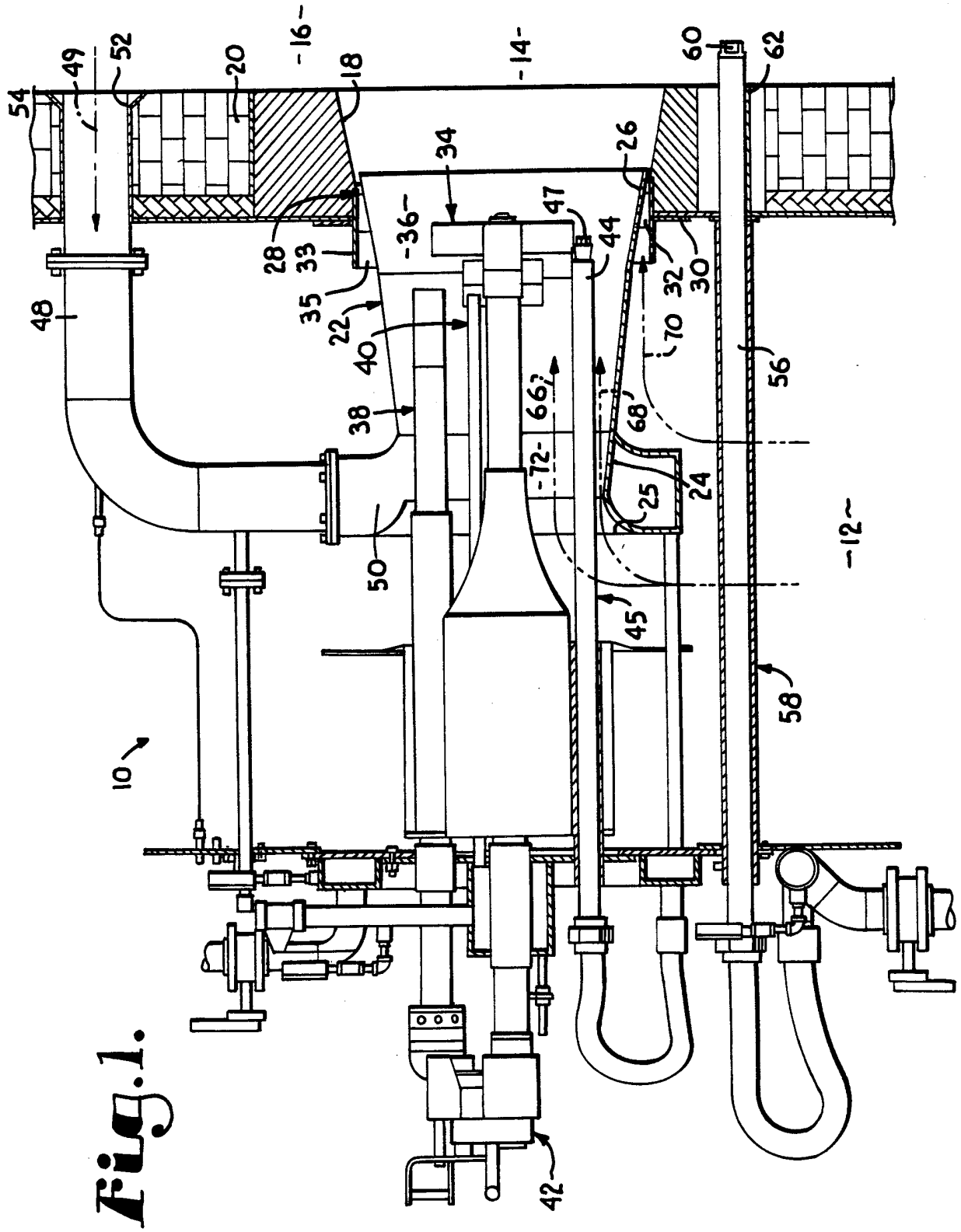
54
49
52
20
16
18
14
60
62
34
26
36
47
44
28
33
35
22
40
38
48
32
30
70
56
66
68
72
25
24
12
50
45
58
10
42

Fig. 1.

Fig. 2.

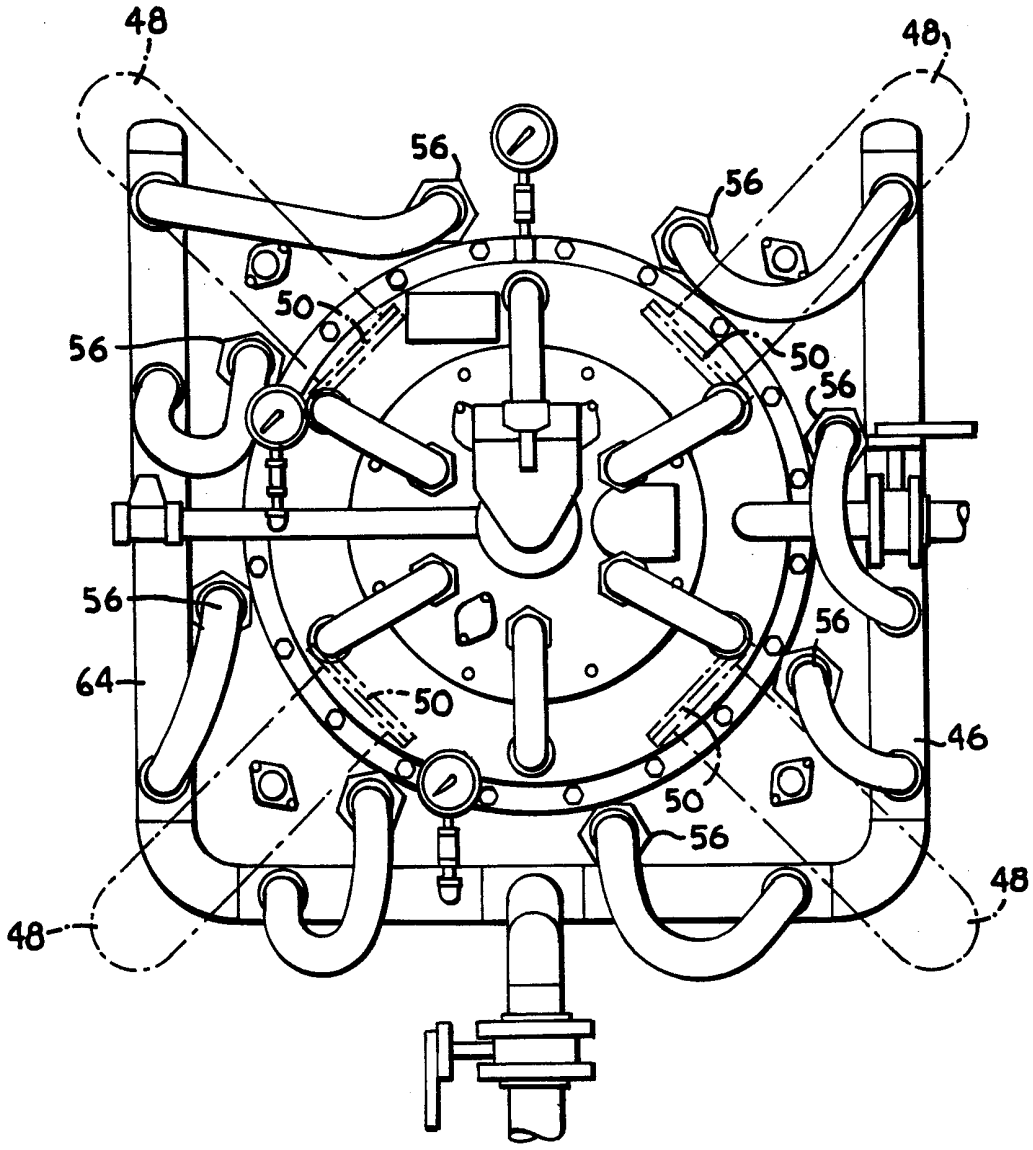

Fig.3.

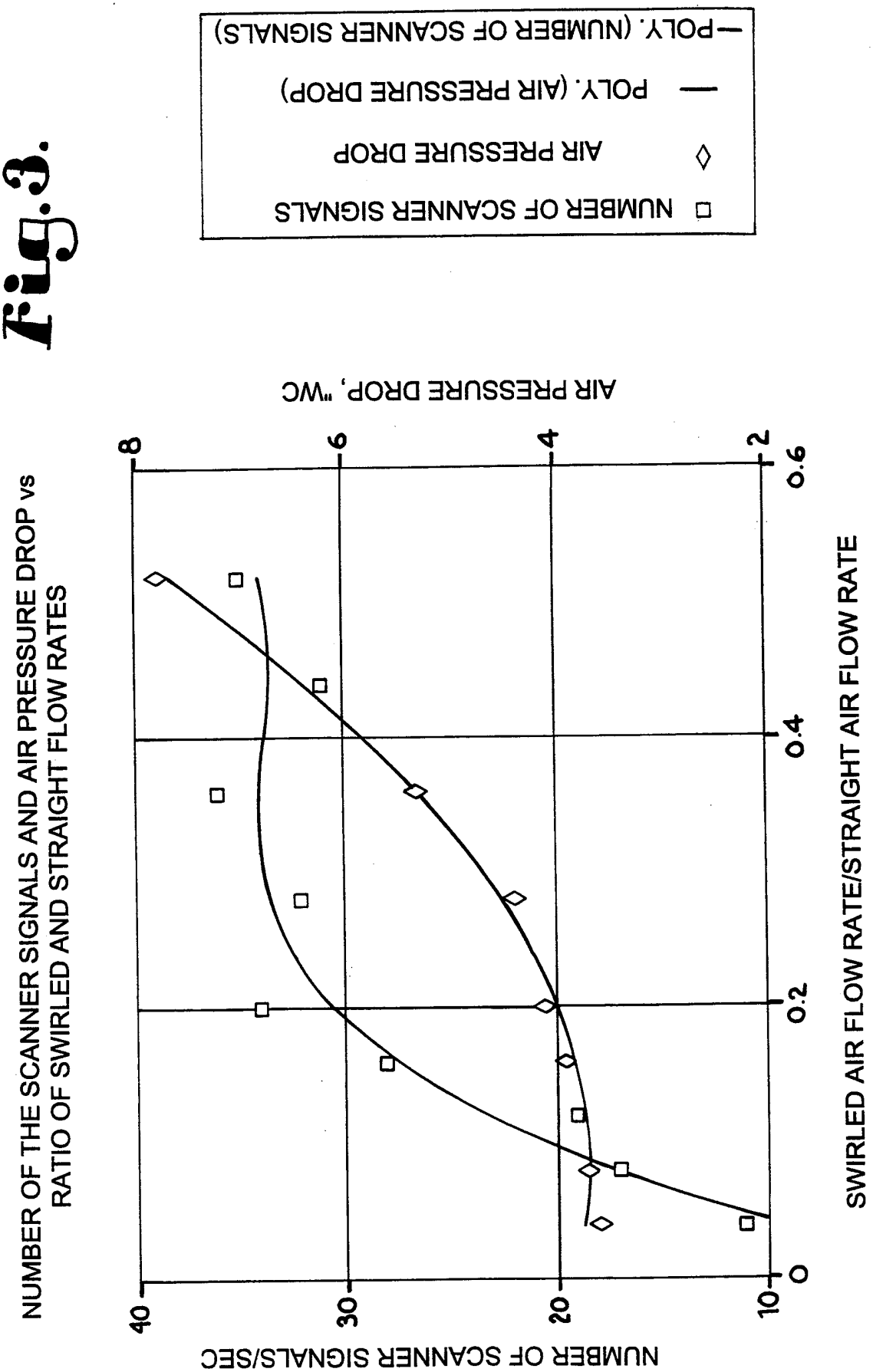
NUMBER OF THE SCANNER SIGNALS AND AIR PRESSURE DROP vs
RATIO OF SWIRLED AND STRAIGHT FLOW RATES
NUMBER OF SCANNER SIGNALS/SEC
AIR PRESSURE DROP, "WC
SWIRLED AIR FLOW RATE/STRAIGHT AIR FLOW RATE
40
30
20
10
8
6
4
2
0
0.2
0.4
0.6
NUMBER OF SCANNER SIGNALS
AIR PRESSURE DROP
POLY. (AIR PRESSURE DROP)
POLY. (NUMBER OF SCANNER SIGNALS)

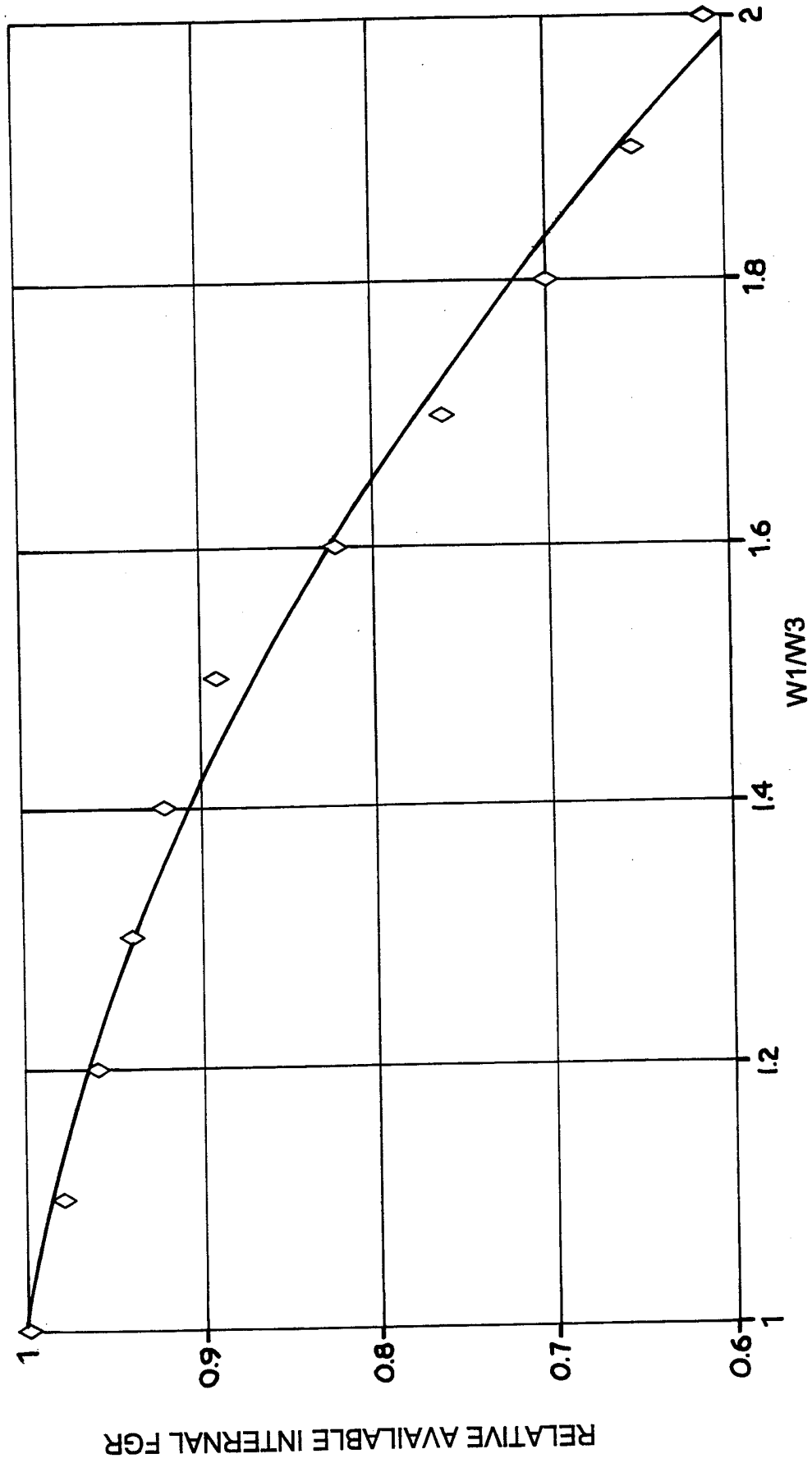
AVAILABLE INTERNAL FGR vs RATIO BETWEEN OF PRIMARY AND TERTIARY AIR FLOWS
RELATIVE AVAILABLE INTERNAL FGR
1
0.9
0.8
0.7
0.6
W1/W3
1
1.2
1.4
1.6
1.8
2

Fig.4.

Fig.5.

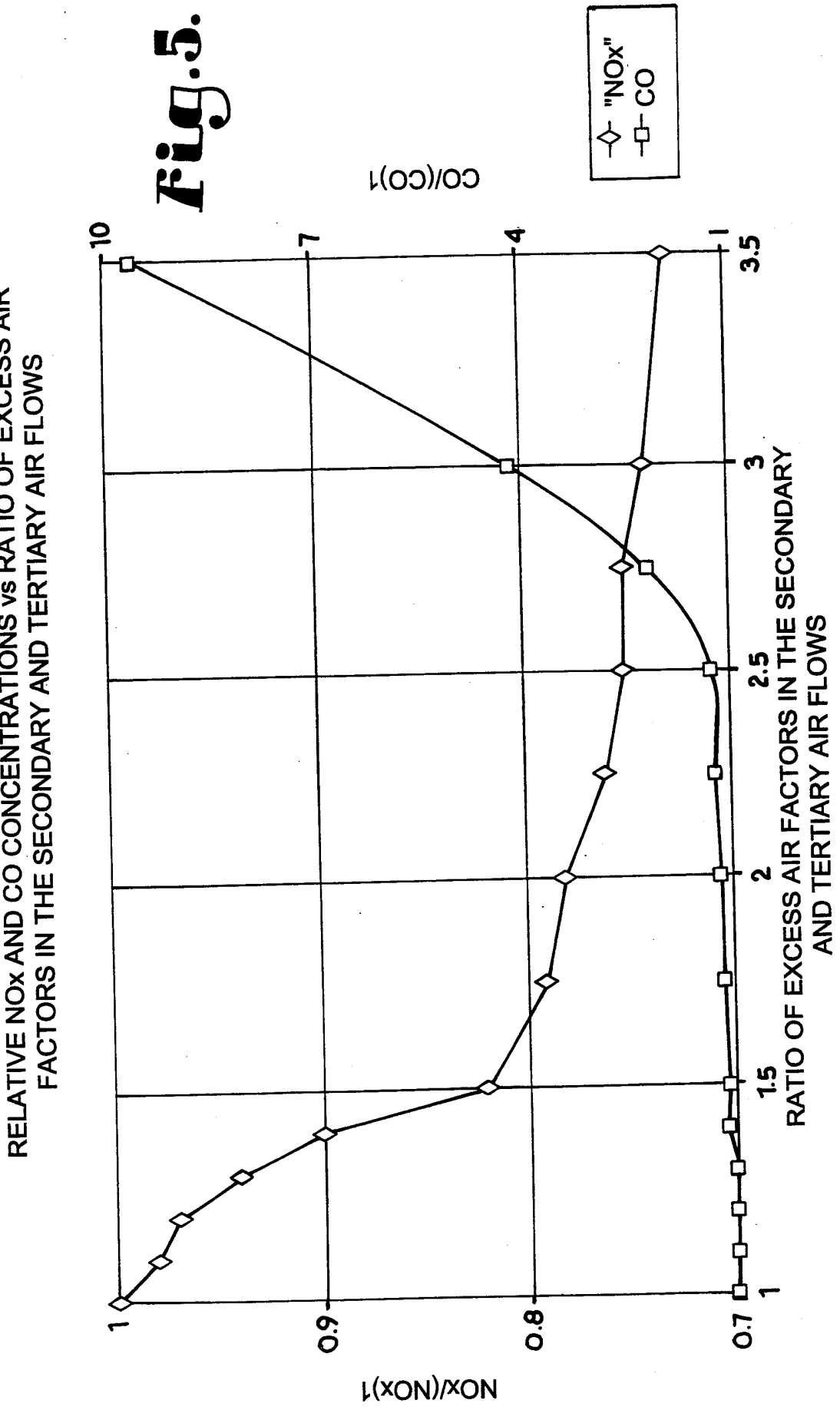
RELATIVE NOx AND CO CONCENTRATIONS vs RATIO OF EXCESS AIR FACTORS IN THE SECONDARY AND TERTIARY AIR FLOWS
"NOx"
CO
CO/(CO)1
NOx/(NOx)1
10
7
4
1
1
0.9
0.8
0.7
3.5
3
2.5
2
1.5
1
RATIO OF EXCESS AIR FACTORS IN THE SECONDARY AND TERTIARY AIR FLOWS

Fig.6.

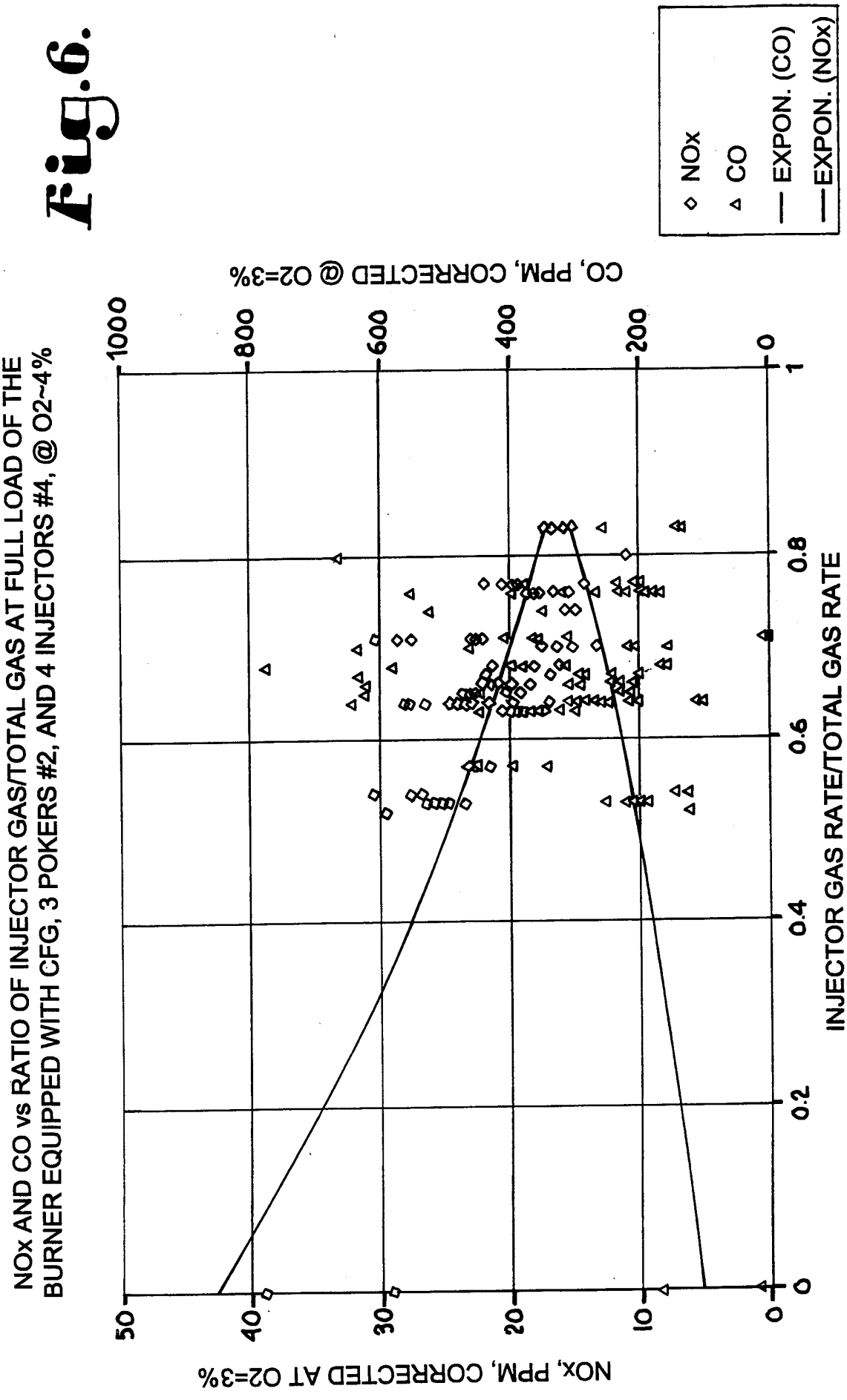
NOx AND CO vs RATIO OF INJECTOR GAS/TOTAL GAS AT FULL LOAD OF THE BURNER EQUIPPED WITH CFG, 3 POKERS #2, AND 4 INJECTORS #4, @ O2~4%
NOx
CO
EXPON. (CO)
EXPON. (NOx)
CO, PPM, CORRECTED @ O2=3%
1000
800
600
400
200
0
NOx, PPM, CORRECTED AT O2=3%
50
40
30
20
10
0
INJECTOR GAS RATE/TOTAL GAS RATE
0
0.2
0.4
0.6
0.8
1

Fig. 7

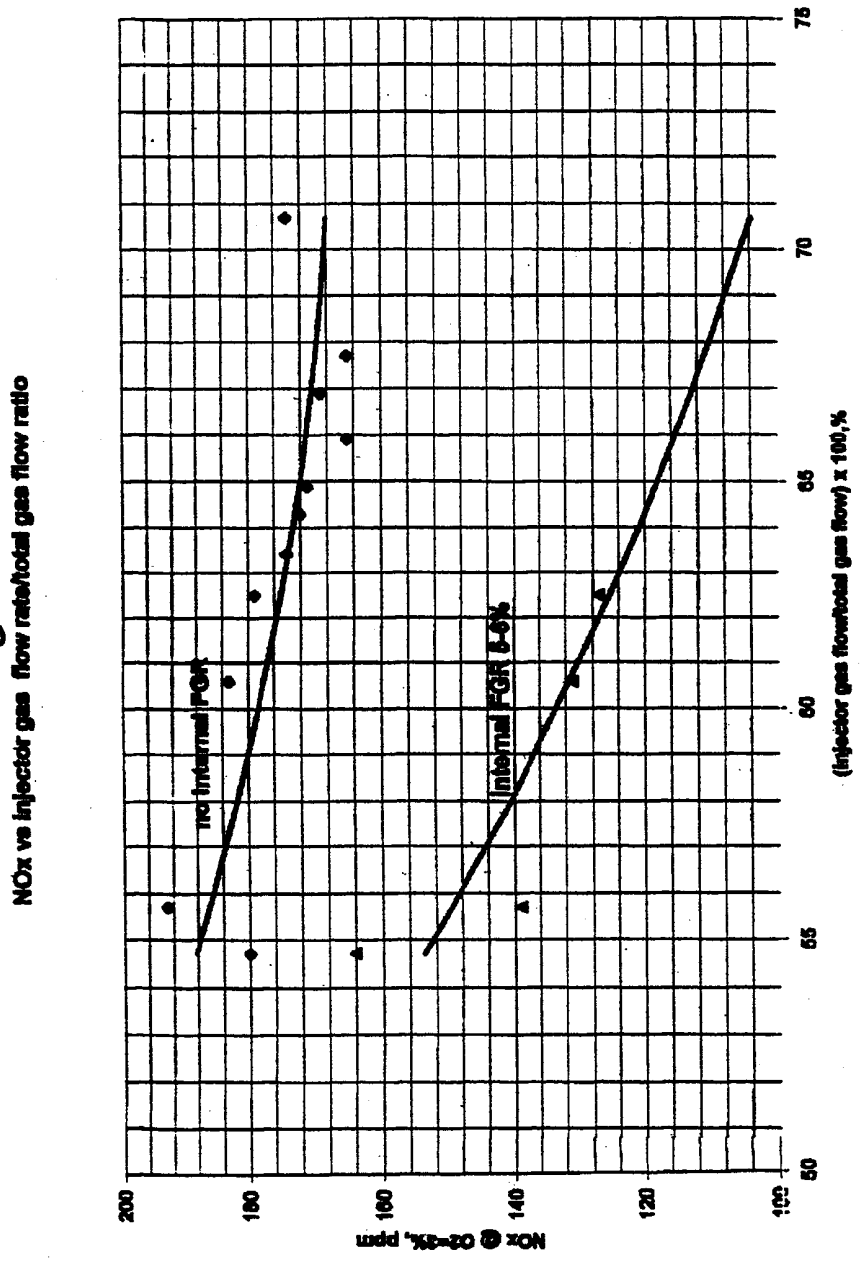
NOx vs injector gas flow rate/total gas flow ratio
no Internal FGR
Internal FGR 5-6%
NOx @ 02=3%, ppm
(injector gas flow/total gas flow) x 100,%
200
180
160
140
120
100
75
70
65
60
55

INTERNATIONAL SEARCH REPORT

Interr nal Application No
PCT/US 99/13767

A. CLASSIFICATION OF SUBJECT MATTER
IPC 6 F23C9/08 F23C7/00 F23D17/00

According to International Patent Classification (IPC) or to both national classification and IPC

B. FIELDS SEARCHED

Minimum documentation searched (classification system followed by classification symbols)
IPC 6 F23C F23D

Documentation searched other than minimum documentation to the extent that such documents are included in the fields searched

Electronic data base consulted during the international search (name of data base and, where practical, search terms used)

C. DOCUMENTS CONSIDERED TO BE RELEVANT

Category °	Citation of document, with indication, where appropriate, of the relevant passages	Relevant to claim No.
X Y	US 4 708 638 A (BRAZIER JOHN F ET AL) 24 November 1987 (1987-11-24) the whole document	1,43 2-15, 29-42, 44-55, 69-81
X	DE 30 48 201 A (STEINMUELLER GMBH L & C) 8 July 1982 (1982-07-08) the whole document	1,43
X	PATENT ABSTRACTS OF JAPAN vol. 004, no. 057 (M-009), 26 April 1980 (1980-04-26) & JP 55 023869 A (BABCOCK HITACHI KK), 20 February 1980 (1980-02-20) abstract	1,43

-/--

[X] Further documents are listed in the continuation of box C.

[X] Patent family members are listed in annex.

° Special categories of cited documents :

"A" document defining the general state of the art which is not considered to be of particular relevance

"E" earlier document but published on or after the international filing date

"L" document which may throw doubts on priority claim(s) or which is cited to establish the publication date of another citation or other special reason (as specified)

"O" document referring to an oral disclosure, use, exhibition or other means

"P" document published prior to the international filing date but later than the priority date claimed

"T" later document published after the international filing date or priority date and not in conflict with the application but cited to understand the principle or theory underlying the invention

"X" document of particular relevance; the claimed invention cannot be considered novel or cannot be considered to involve an inventive step when the document is taken alone

"Y" document of particular relevance; the claimed invention cannot be considered to involve an inventive step when the document is combined with one or more other such documents, such combination being obvious to a person skilled in the art.

"&" document member of the same patent family

Date of the actual completion of the international search	Date of mailing of the international search report
22 September 1999	28/09/1999

Name and mailing address of the ISA	Authorized officer
European Patent Office, P.B. 5818 Patentlaan 2 NL – 2280 HV Rijswijk Tel. (+31-70) 340-2040, Tx. 31 651 epo nl, Fax: (+31-70) 340-3016	Coli, E

1

Form PCT/ISA/210 (second sheet) (July 1992)

INTERNATIONAL SEARCH REPORT

Inte onal Application No
PCT/US 99/13767

C.(Continuation) DOCUMENTS CONSIDERED TO BE RELEVANT

Category °	Citation of document, with indication,where appropriate, of the relevant passages	Relevant to claim No.
X Y	US 5 634 785 A (BURY FREDERIC ET AL) 3 June 1997 (1997-06-03) the whole document ---	16,56 17-42, 57-81
X	US 4 925 387 A (BURY FREDERIC ET AL) 15 May 1990 (1990-05-15) the whole document ---	16,56
Y,P	US 5 860 803 A (GUARCO JOHN P ET AL) 19 January 1999 (1999-01-19) cited in the application the whole document -----	2-15, 17-28, 44-55, 57-68

1

INTERNATIONAL SEARCH REPORT

formation on patent family members

Inter nal Application No
PCT/US 99/13767

Patent document cited in search report	Publication date	Patent family member(s)	Publication date
US 4708638 A	24-11-1987	CA 1267601 A	10-04-1990
		EP 0194079 A	10-09-1986
		JP 61240008 A	25-10-1986
DE 3048201 A	08-07-1982	NONE	
JP 55023869 A	20-02-1980	NONE	
US 5634785 A	03-06-1997	FR 2718222 A	06-10-1995
		CA 2145347 A	30-09-1995
		DE 69509816 D	01-07-1999
		EP 0675321 A	04-10-1995
US 4925387 A	15-05-1990	FR 2625295 A	30-06-1989
		AT 84866 T	15-02-1993
		CA 1320901 A	03-08-1993
		DE 3877735 A	04-03-1993
		EP 0323299 A	05-07-1989
		GR 3006997 T	30-06-1993
		JP 1318804 A	25-12-1989
		KR 127831 B	29-12-1997
US 5860803 A	19-01-1999	NONE	