US00D789725S

(12) United States Design Patent

Kestenbaum

(10) Patent No.: US D789,725 S
(45) Date of Patent: ** Jun. 20, 2017

(54) **COFFEE CARAFE**

(71) Applicant: **SharkNinja Operating LLC**, Newton, MA (US)

(72) Inventor: **Daniel Kestenbaum**, Brookline, MA (US)

(73) Assignee: **SHARKNINJA OPERATING LLC**, Newton, MA (US)

(**) Term: **15 Years**

(21) Appl. No.: **29/530,404**

(22) Filed: **Jun. 16, 2015**

(51) **LOC (10) Cl.** **07-01**

(52) **U.S. Cl.**
USPC **D7/317**; D7/318

(58) **Field of Classification Search**
USPC D7/316–319.312, 312, 598, 600, 322, D7/321; 222/188, 465.1, 713; D23/209
CPC A47J 41/0027; A47J 31/50; A47J 45/0077; A47J 31/053; A47G 19/22
See application file for complete search history.

(56) **References Cited**

U.S. PATENT DOCUMENTS

D194,697	S *	2/1963	Douglas	D7/317
D198,702	S *	7/1964	Douglas	D7/318
3,174,424	A *	3/1965	Serio	A47J 31/053 210/474
3,306,505	A *	2/1967	Serio	A47J 36/14 222/475.1
3,311,399	A *	3/1967	Holton	A47J 45/077 24/274 R
D239,074	S *	3/1976	Rakocy	D7/309
D245,058	S *	7/1977	Hauenstein	D7/318
4,058,338	A *	11/1977	Brown	A47J 45/077 294/31.2
4,858,787	A *	8/1989	Stone	A47J 41/0027 220/374
D405,640	S *	2/1999	Saltet	D7/317
D655,563	S	3/2012	Kern et al.	
D712,188	S *	9/2014	Averty	D7/309
D753,948	S *	4/2016	Kestenbaum	D7/317
2011/0048241	A1 *	3/2011	Smit	A47J 31/50 99/288

FOREIGN PATENT DOCUMENTS

JP	574311	S	4/1982

OTHER PUBLICATIONS

Examinees Report; Canadian Application No. 165475; Date of Mailing: Feb. 12, 2016; 2 Pages.
Notice of Allowance; Japanese Application No. 2015-028000; Date of Mailing: Oct. 28, 2016; 2 Pages.
Notice of Allowance; Japanese Application No. 2015-028001; Date of Mailing: Oct. 28, 2016; 2 Pages.
(Continued)

Primary Examiner — Marianne Pandozzi
(74) *Attorney, Agent, or Firm* — Cantor Colburn LLP

(57) **CLAIM**

We claim, the ornamental design for a coffee carafe, as shown and described.

DESCRIPTION

FIG. **1** is a perspective view of a coffee carafe showing our new design;
FIG. **2** is a front view thereof;
FIG. **3** is a rear view thereof;
FIG. **4** is a left side view thereof;
FIG. **5** is a right side view thereof;
FIG. **6** is a top plan view thereof;
FIG. **7** is a bottom plan view thereof; and,
FIG. **8** is an exploded perspective view thereof.

1 Claim, 8 Drawing Sheets



(56) **References Cited**

OTHER PUBLICATIONS

Notice of Allowance; Japanese Application No. 2015-028002; Date of Mailing: Oct. 28, 2016; 2 Pages.
Notice of Completion of Formalities for Patent Register and Notice of Grant of Design Patent Right; Chinese Application No. 2015305332600; Date of Mailing: Apr. 27, 2016; 4 pages.
Notice of Decision for Design Registration; Korean Application No. 30/2015-0060558[M001]; Date of Mailing: Jul. 11, 2016; 9 pages.
Notice of Decision for Design Registration; Korean Application No. 30/2015-0060558[M002]; Date of Mailing: Jul. 11, 2016; 10 pages.
Notice of Decision for Design Registration; Korean Application No. 30/2015-0060558[M003]; Date of Mailing: Jul. 11, 2016; 9 pages.
Notice of References; Japanese Application No. 2015-028002; Date of Mailing: Oct. 28, 2016; 4 Pages.
Office Action; Korean Application No. 30/2015-0060558[M001]; Date of Mailing: Mar. 31, 2016; 4 Pages.
Office Action; Korean Application No. 30/2015-0060558[M002]; Date of Mailing: Mar. 31, 2016; 4 Pages.
Office Action; Korean Application No. 30-2015-0060558[M003]; Date of Mailing: Mar. 31, 2016; 4 pages.

* cited by examiner



FIG. 1

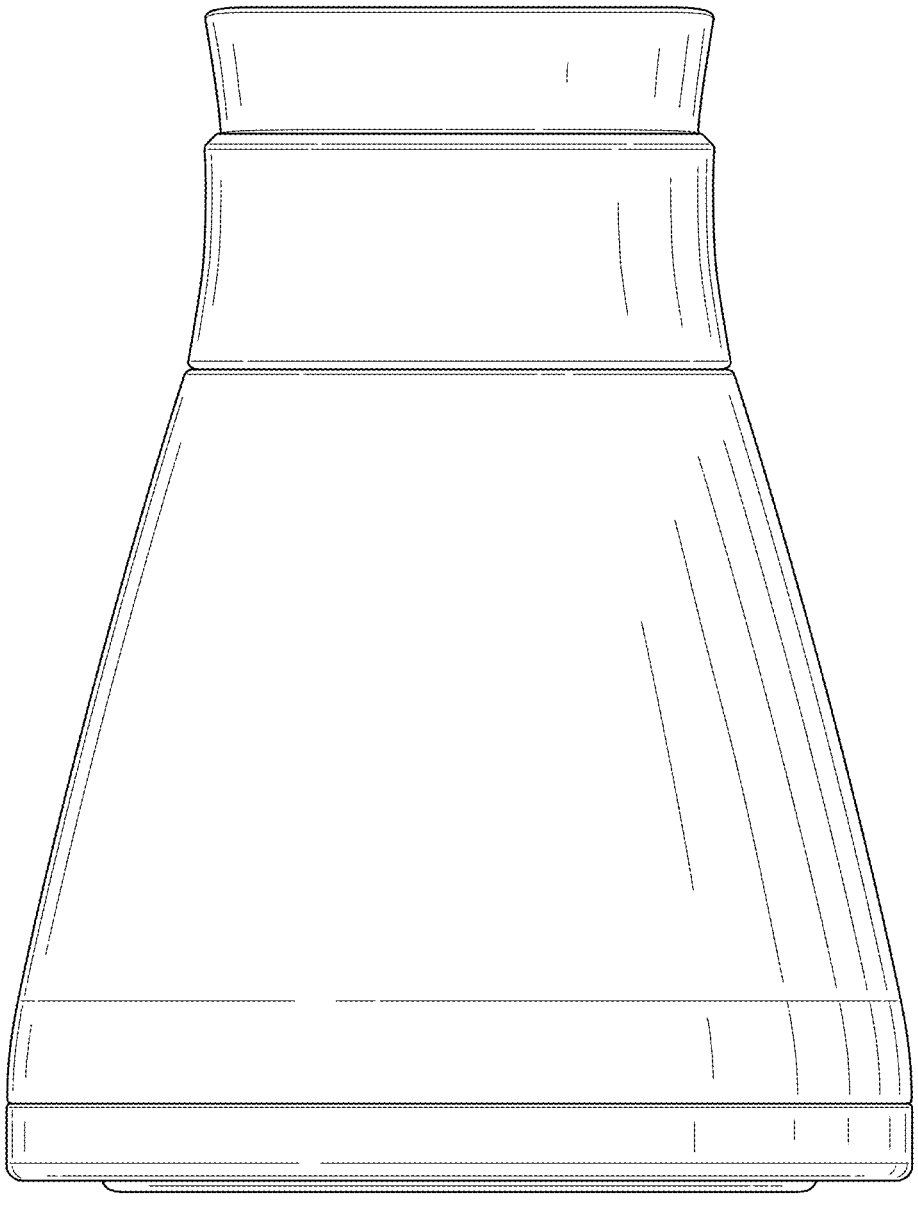

FIG. 2

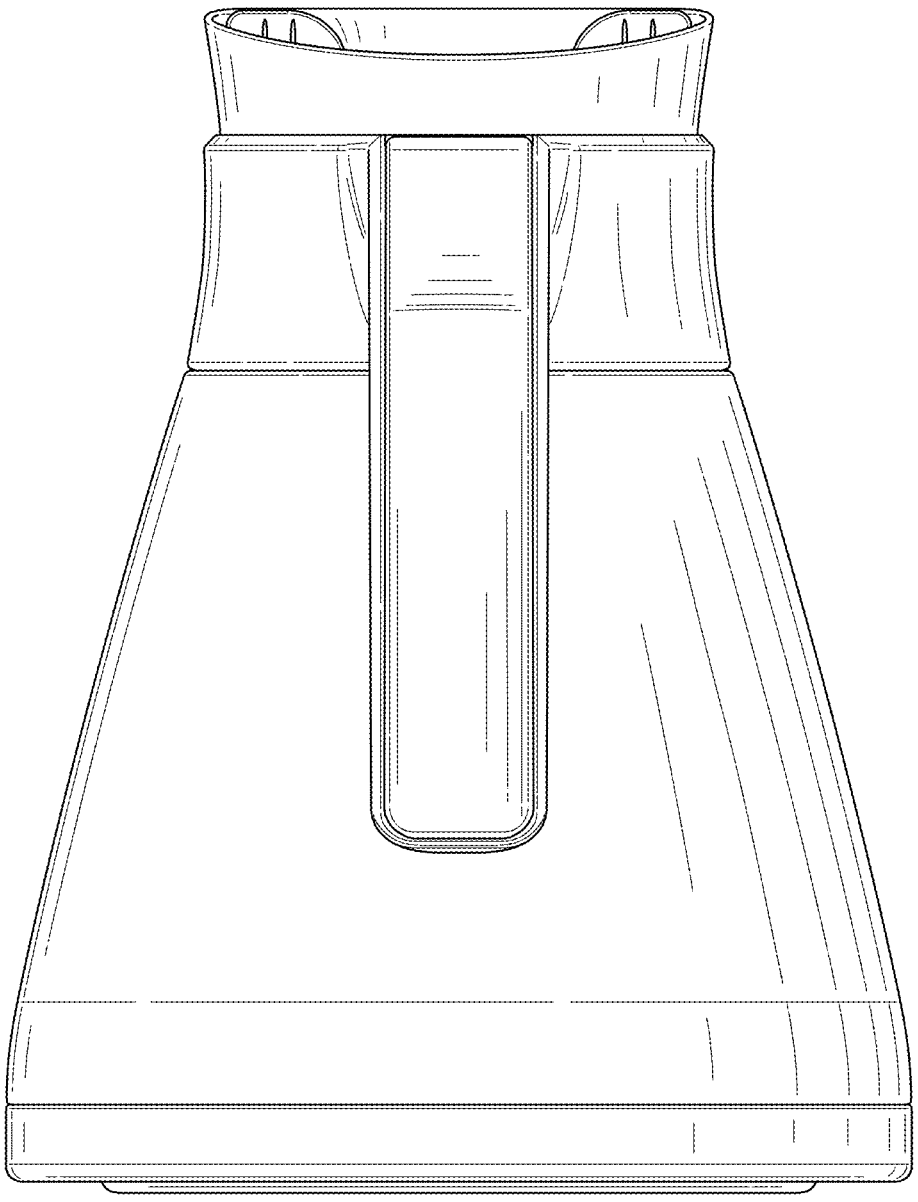

FIG. 3



FIG. 4



FIG. 5

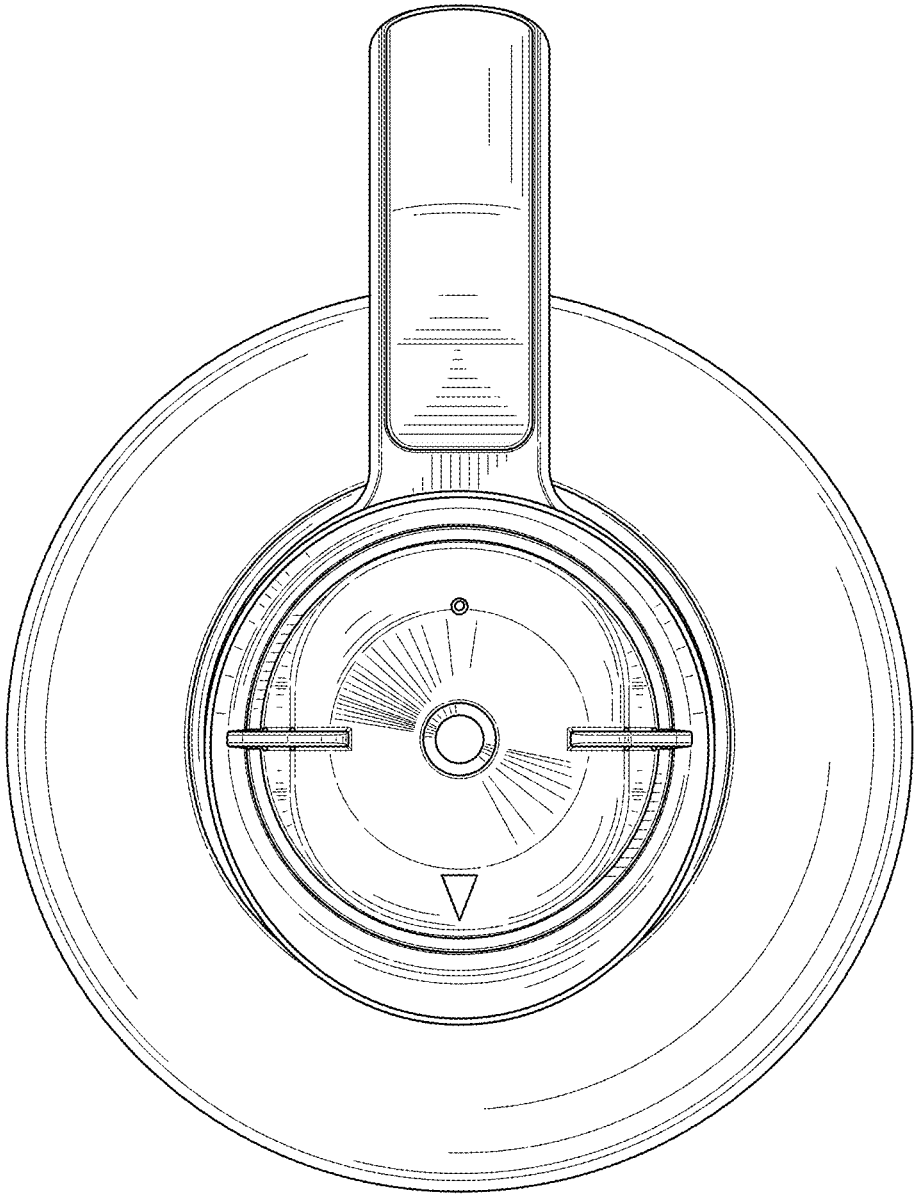

FIG. 6

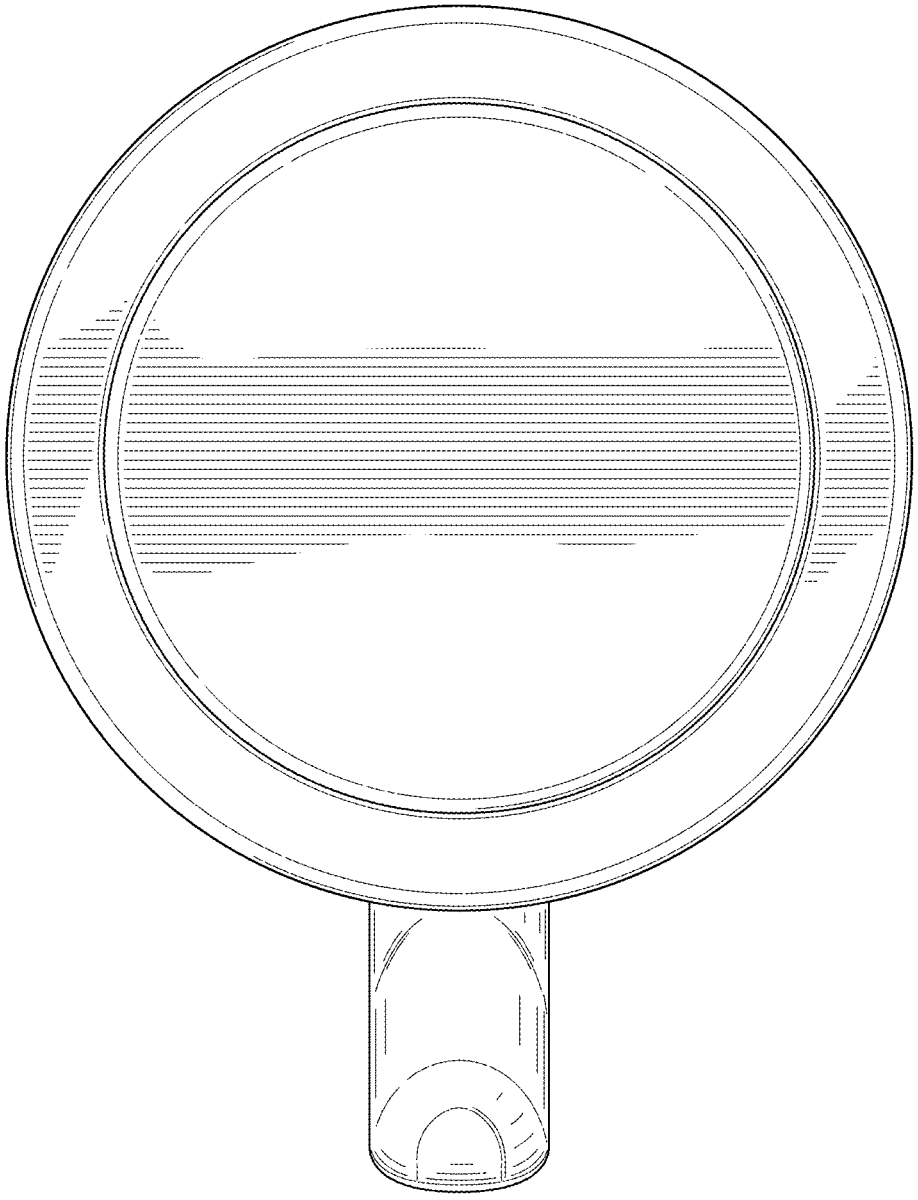

FIG. 7



FIG. 8