Oct. 26, 1954 R. J. ELLIOTT 2,692,423

METHOD OF FORMING COMPOSITE IGNITIONS OR INDUCTION COILS

Filed June 4, 1952

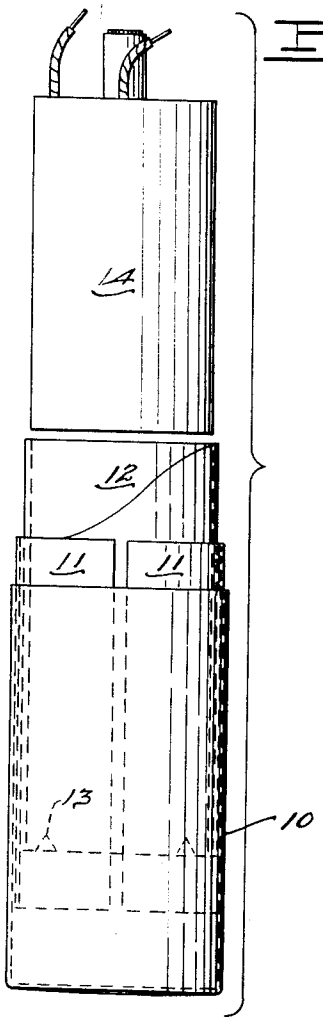

Fig. 1.

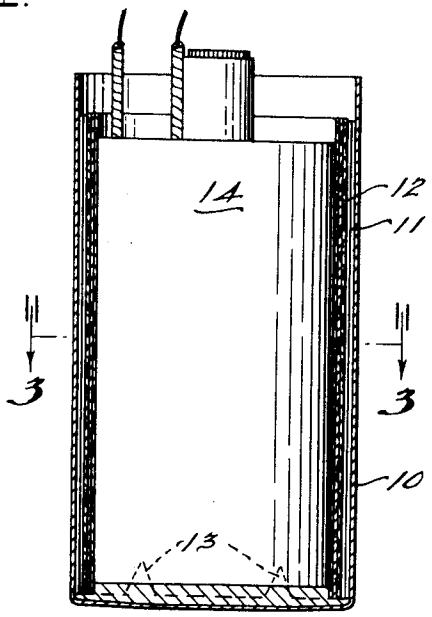

Fig. 2.

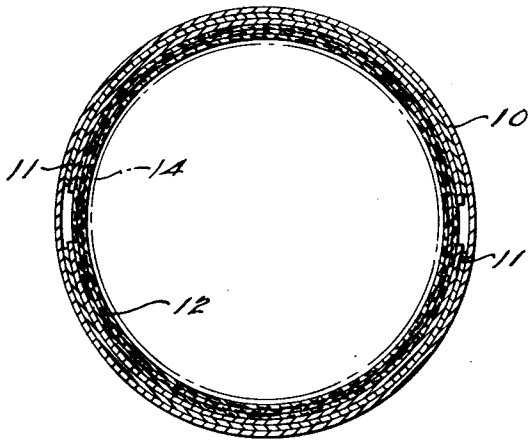

Fig. 3.

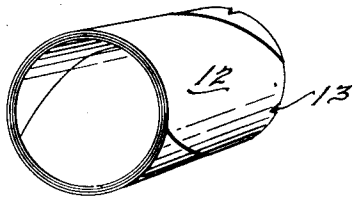

Fig. 4.

INVENTOR.
Ralph J. Elliott.
BY
Maxwell V. Wallace
ATTORNEY.

Patented Oct. 26, 1954

2,692,423

UNITED STATES PATENT OFFICE

2,692,423

METHOD OF FORMING COMPOSITE IGNITIONS OR INDUCTION COILS

Ralph J. Elliott, Royal Oak, Mich.

Application June 4, 1952, Serial No. 291,715

2 Claims. (Cl. 29—155.58)

1

This invention relates to an improved method of assembling the individual members or elements of composite ignition or induction coils of the type used for ignition apparatus of internal combustion engines.

In the past, in the assembling of many types of such coils, the method used was cumbersome and costly to the manufacturer, the assembling of the device taking many steps and cousuming a great deal of valuable time. In the instant disclosure there is set forth a new and improved method of assembling such coils which is not only more efficient than the method formerly used, but the end result is a better performing coil.

The above and other objects will appear more fully from the following more detailed description of the invention, and from the drawing, wherein:

Fig. 1 is a view of the parts or members of the assembly as they are about to be inserted within the can portion of the assembly.

Fig. 2 is a vertical section of the device.

Fig. 3 is a horizontal section taken substantially on line 3—3 of Fig. 2; and

Fig. 4 is a perspective view of the insulating tube member.

Referring now to the drawing, the numeral 10 designates an outer can or sheath member made of metal and open at one end thereof, the same being adapted to receive plate members 11, said plate members being of metal, approximately the same height as the can member 10 and bent to form an arc so that they will conveniently nest within each other, as shown best in Fig. 3. An insulating tube member 12 is provided, Fig. 4, the same being constructed of non-electric conducting paperboard material having sufficient rigidity to maintain its shape and constructed, for example, of a kraft and chipboard material saturated with a high melting point asphaltic material, or other suitable thermoplastic insulating binder. These tubes may be manufactured in extra long lengths and cut to size as desired. If desired a plurality of notches 13 may be provided in one end of the tube to allow freedom or, even flow and distribution of a hot binder, such as a pitch or asphaltic substance in the final assembly of the coil, later to be described. Although notches are shown herein, these apertures may be of any design or construction, just so long as they allow freedom of flow of the binding substance which serves the function of rigidly securing the tube 12, plates 11 and the can member 10 into an integral unitary relationship. The numeral 14 designates a well-known ignition or

2

induction coil member per se, of conventional design, adapted to fit snugly within insulating tube 12.

In the past it has been the practice in assembling coils as above outlined, to first insert plates 11 within can member 10 in opposed pairs, each pair being comprised of two plates in abutting nested relationship, and spaced apart, as shown best in Fig. 1. The hot asphalt or other thermoplastic binding material is then poured into can member 10 to substantially cover the bottom of the can member. Coil 14 is then wrapped in a piece of treated tar paper which forms a separator between the coil 14 and the metal plates 11, and then, while holding the plates in separated positions within the can 10, the coil member 14 with the tar paper wrapping thereon, is slid into position down into the can. The above outlined steps take considerable time and are very cumbersome, the assembler having to keep in mind at all times that the plates 11 must be properly spaced apart within the inner periphery of the can 10. While holding the plates in position with the fingers of one hand it is necessary to thread the coil member 14 with its tar paper wrapping between the plates 11 and down into the hot asphaltic substance in the bottom of can 10. The primary difficulty in the hand assembling method above outlined lies in the close fit between the coil member 14 surrounded by the tar paper wrapping thereon and the inner surfaces of plates 11.

In carrying out my new method of assembling induction coils I provide a new open ended insulating tube member which is prefabricated in long lengths and cut to size, the same comprising a chipboard and/or kraft material saturated with a high melting point asphalt, or the like, in butted and overlapping plies, the finished product providing an efficient insulating material. In the periphery of one end of the tube there may be cut a plurality of notches or openings of other shapes, if deemed essential, to allow the hot asphalt or other thermoplastic binding material, which is placed in the bottom of the can member 10, to flow freely therethrough so that the same will contact the coil member 14. In my new method of assembling the induction coil, the assembler takes insulating tube 12 and places the plates 11 against the outer periphery thereof, said plates being arc-shaped they nest in pairs of two and are placed against said tube so that there are opposed gaps, Fig. 1. The plates, held against the tube, are then inserted into can member 10, said tube holding the plates firmly against

the inner periphery of said can member. Hot asphaltic material is then poured into the can member, sufficient to cover the bottom of the can. The coil member 14 is then inserted into tube 12 and the assembly allowed to cool with hardening of the asphaltic binder thereby forming a unitary induction coil assembly.

There has been disclosed herein a new open-ended insulating tube and method of assembling ignition or induction coils, which, in actual practice, has proven a great time and money saver to the manufacturers of such coils. Instead of the old type tar-paper, which has to be cut to size each time it is used and wrapped about the coil member of the device, I provide a prefabricated insulating tube which is adapted to receive opposed plates which can be held against the outside of the tube while the tube and plates are inserted within the outer can member of the device. A hot asphaltic material is then poured into the can member and the coil member quickly inserted into the insulating tube within the can, the entire operation taking seconds instead of minutes as with the old method of assembly.

While certain ways of carrying out the invention have been quite specifically disclosed and certain variations have been described, other changes may be made within the scope of the invention as defined in the appended claims.

I claim:

1. In the assembling of induction coils and the like wherein a cylindrical induction coil member and spaced arcuate metal plate members are to be assembled within an outer cup-like sheath member in insulated relation to each other, the steps which comprise positioning the plate members in spaced relation on the periphery of a preformed cylindrical insulating tube member having substantial rigidity to retain its shape the insulating tube member being provided with a plurality of openings around the outer periphery to allow free flow of molten binding material thereto, inserting the assembled arcuate plate members and insulating tube member within the sheath member, pouring molten binding material into the sheath member after the insertion of the insulating tube member and arcuate plate members to bind the insulating tube member and plate members to the interior of the sheath member, and thereafter inserting an induction coil member or the like within the cylindrical insulating tube member and then allowing the assembly to cool, thereby forming a unitary device, the sheath, arcuate plate, insulating tube and induction coil members of the assembly being of such relative sizes that the members are snugly nested when assembled in the order stated above.

2. A method as set forth in claim 1, wherein the insulating tube member is formed of paperboard material saturated with a high melting point thermoplastic insulating binder.

References Cited in the file of this patent

UNITED STATES PATENTS

Number	Name	Date
981,129	Seigle	Jan. 10, 1911
1,640,543	Gudge	Aug. 30, 1927
1,878,606	Schneider et al.	Sept. 20, 1932
1,977,122	Ehrlich et al.	Oct. 16, 1934