US00D426705S

United States Patent [19]

Fang

[11] Patent Number: Des. 426,705

[45] Date of Patent: ** Jun. 20, 2000

[54] **TOOL BOX**

[76] Inventor: **Zen-Chieh Fang**, P.O. Box 14-414, Ban-Chiau, Taipei Hsieh, Taiwan

[**] Term: **14 Years**

[21] Appl. No.: **29/101,289**

[22] Filed: **Feb. 26, 1999**

[51] **LOC (7) Cl.** **03-01**

[52] **U.S. Cl.** **D3/282**; D3/276; D3/905

[58] **Field of Search** D3/272, 273, 276, D3/281, 282, 291, 294, 295, 905; 206/349, 372, 373, 377, 378, 379, 508; 190/110, 111, 112

[56] **References Cited**

U.S. PATENT DOCUMENTS

D. 321,985	12/1991	Ward	D3/905
D. 347,731	6/1994	Hayakawa et al.	D3/282
D. 351,504	10/1994	Tarozzi	D3/282
D. 357,117	4/1995	Huang	D3/282
D. 358,709	5/1995	Chang	D3/282
D. 406,192	3/1999	Schurman	D3/282
4,998,616	3/1991	Hillinger	206/372
5,114,007	5/1992	Chen	206/373
5,145,064	9/1992	Chen	206/372

Primary Examiner—Philip S. Hyder
Attorney, Agent, or Firm—A & J

[57] **CLAIM**

The ornamental design for a tool box, as shown and described.

DESCRIPTION

FIG. **1** is a front-right-top perspective view of a tool box, showing my new design;

FIG. **2** is a front elevational view thereof;

FIG. **3** is a top plan view thereof;

FIG. **4** is a bottom plan view thereof;

FIG. **5** is a right side view thereof, the left side being a mirror image thereof;

FIG. **6** is a rear elevational view thereof;

FIG. **7** is a perspective view of the tool box of my new design, with the top cover opened, the broken line drawing is for illustrative purposes only and forms no part of the claimed design; and,

FIG. **8** is a perspective view of the tool box of my new design, with the mediated cover opened, the top cover attached to the mediated cover, the broken line drawing is for illustrative purposes only and forms no part of the claimed design.

1 Claim, 8 Drawing Sheets

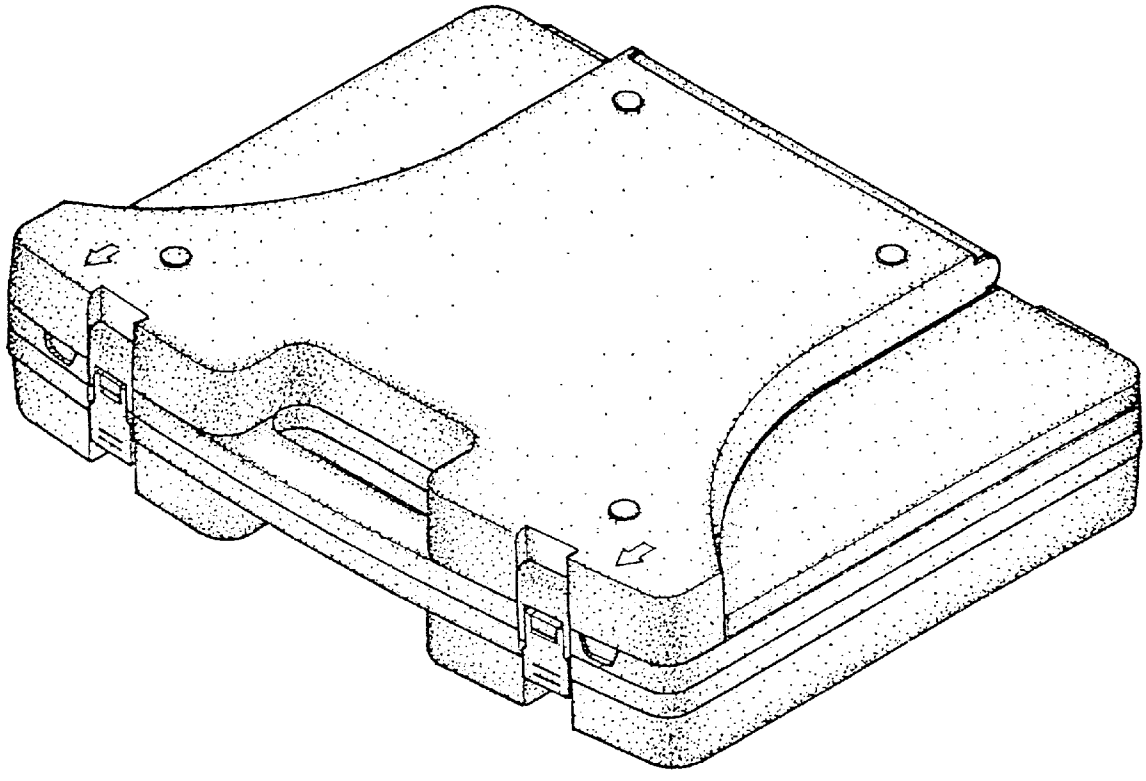

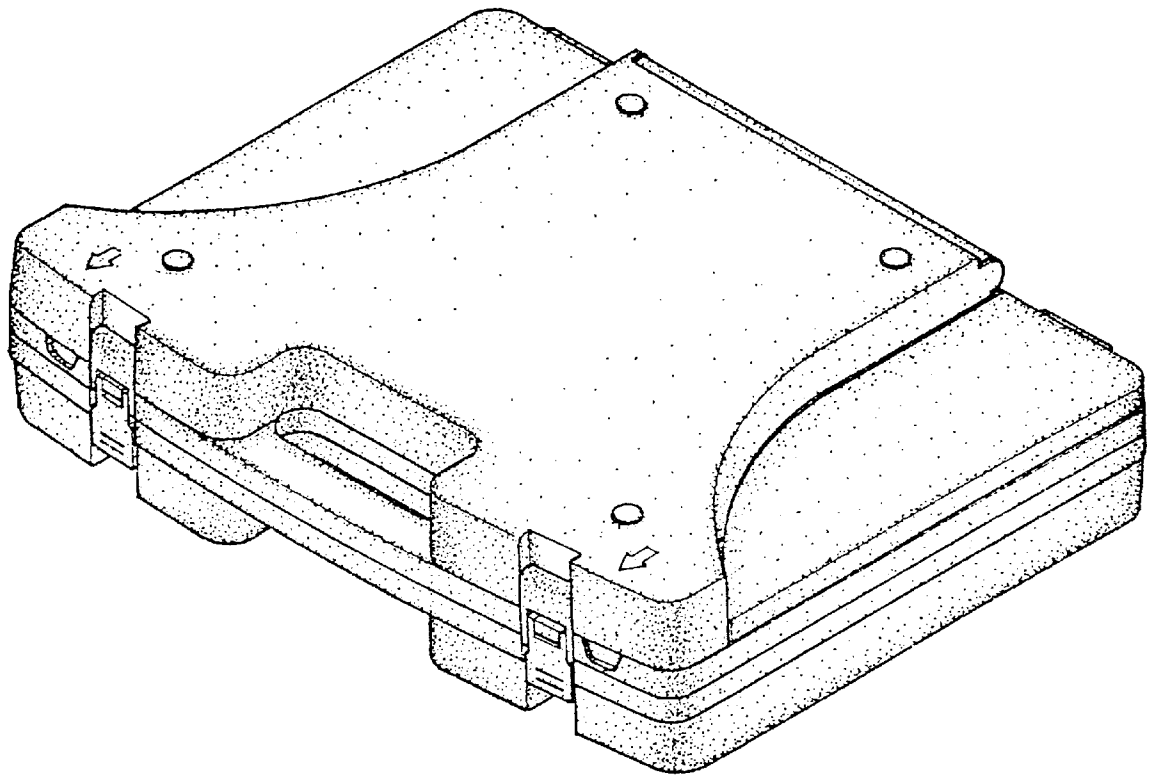

FIG. 1

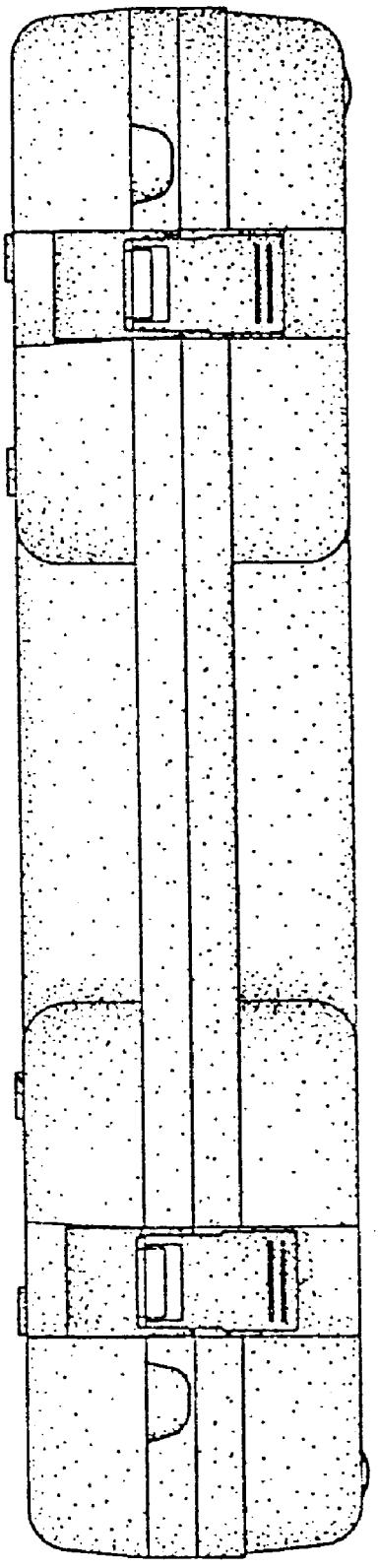

FIG.2

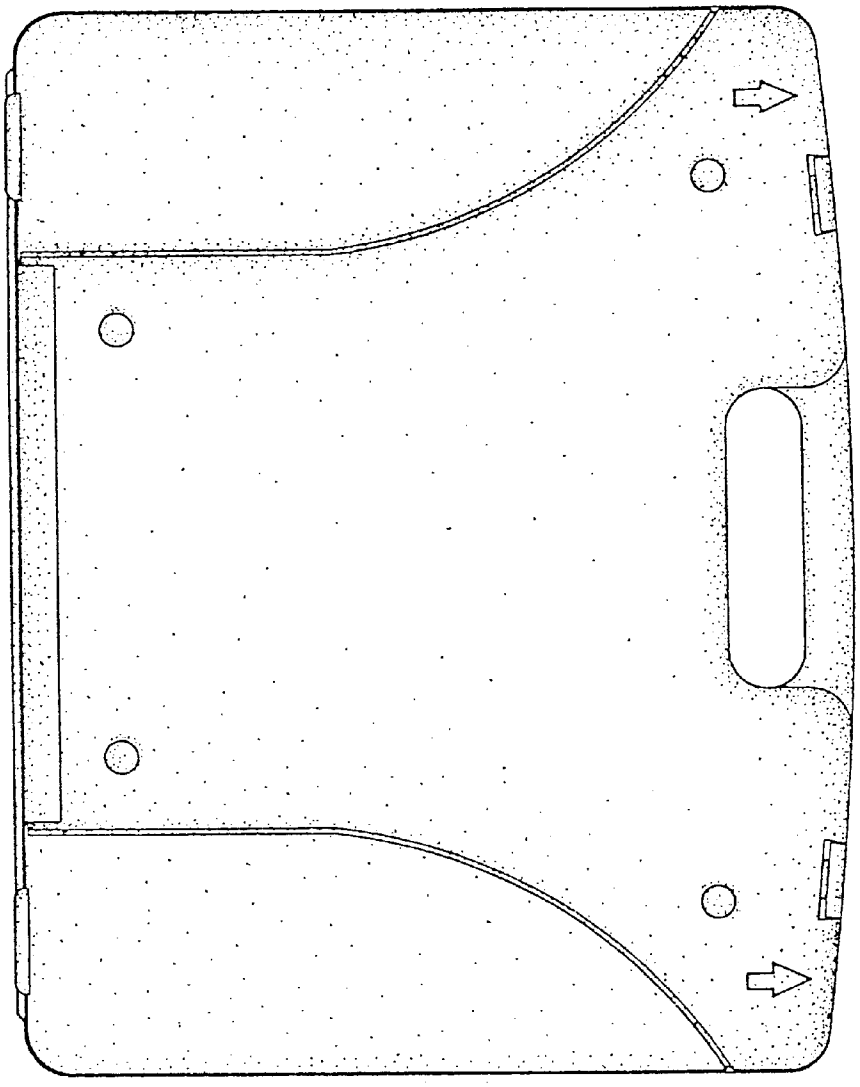

FIG.3

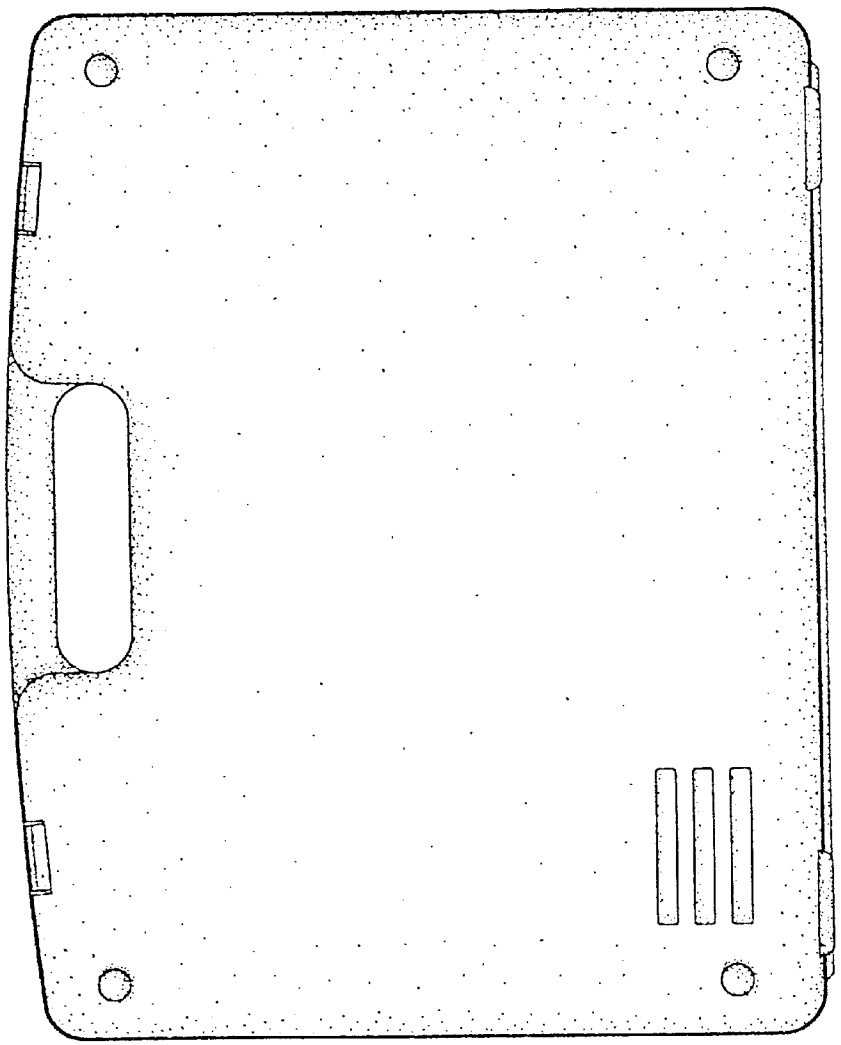

FIG.4

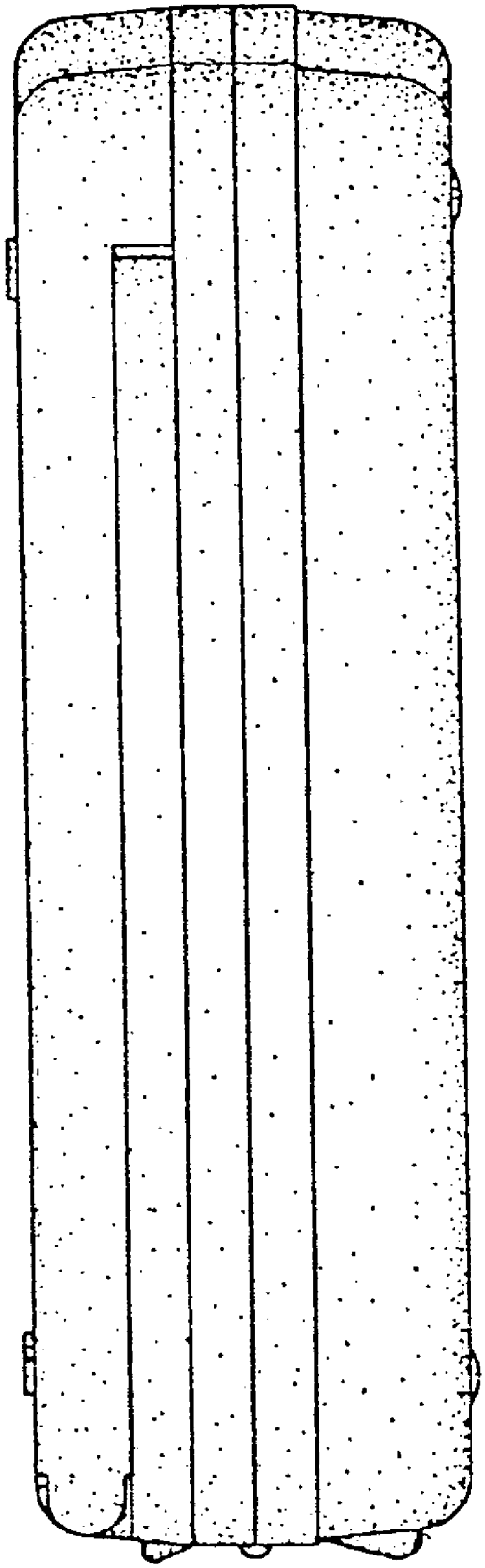

FIG.5

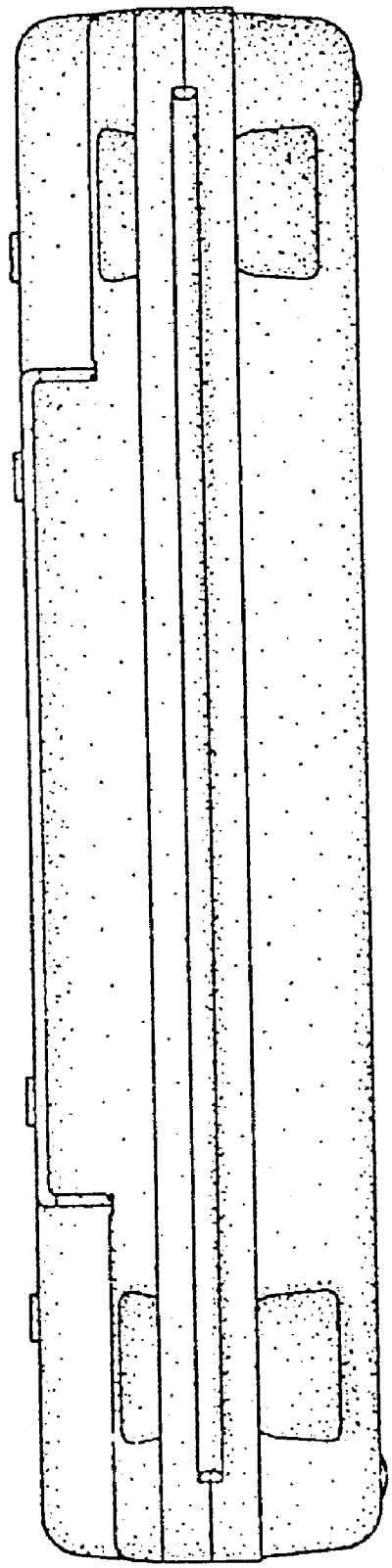

FIG.6

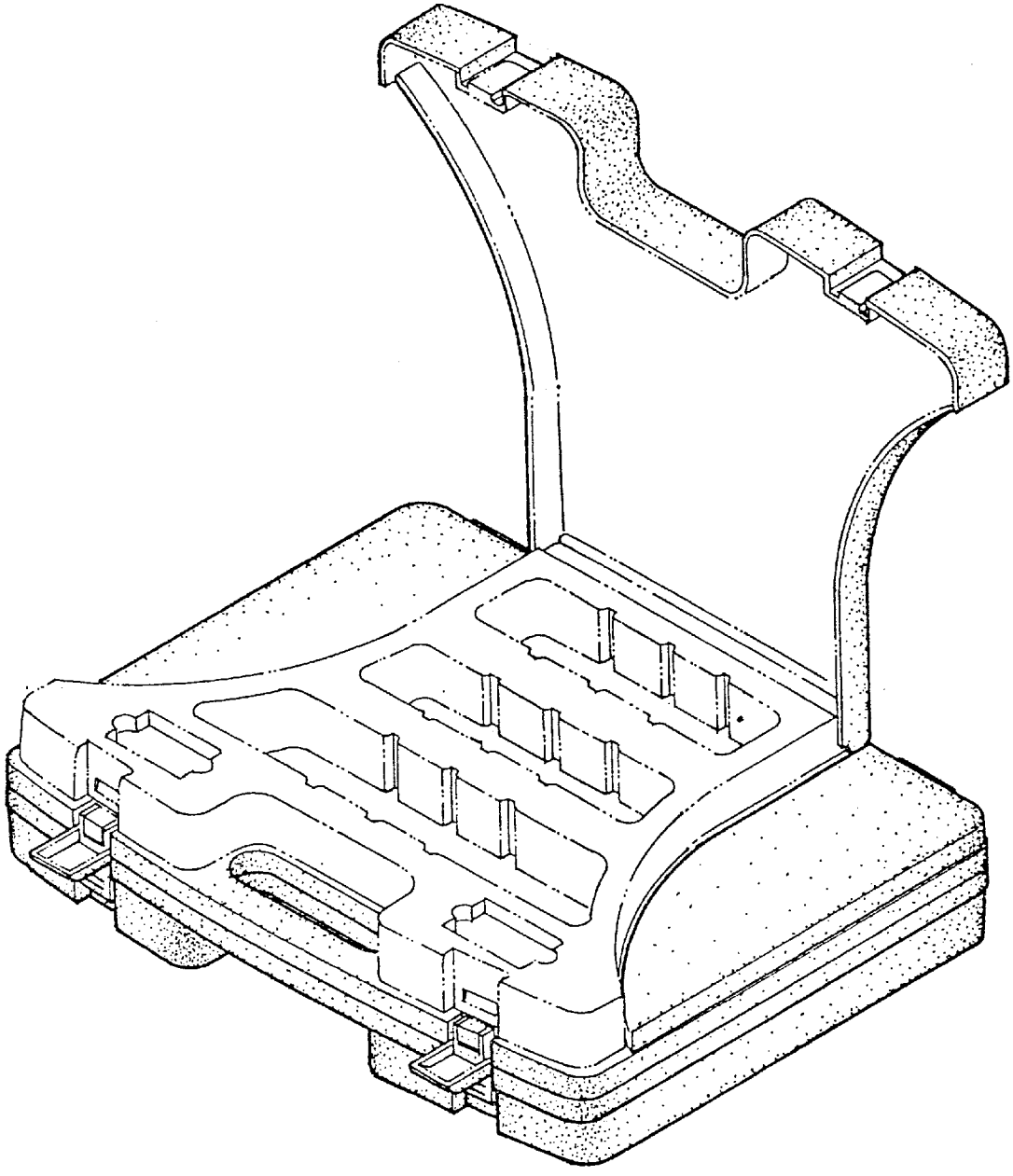

FIG. 7

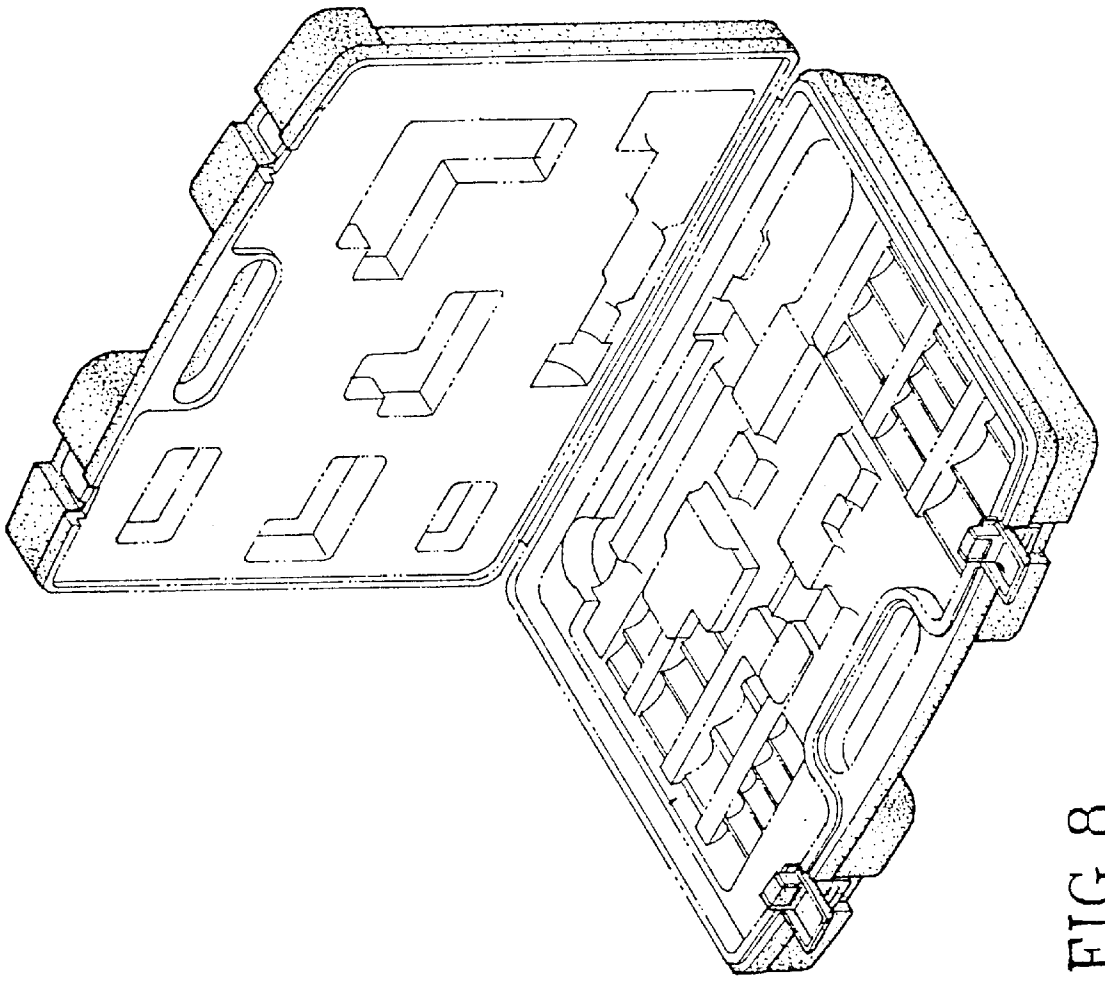

FIG.8