US 20020050509A1

(19) United States

(12) Patent Application Publication (10) Pub. No.: US 2002/0050509 A1

Ezumi et al. (43) Pub. Date: May 2, 2002

(54) FRICTION STIR BONDING METHOD

(76) Inventors: **Masakuni Ezumi**, Kudamatsu (JP); **Kazushige Fukuyori**, Kudamatsu (JP); **Akihiro Satou**, Hitachi (JP)

Correspondence Address:
ANTONELLI TERRY STOUT AND KRAUS
SUITE 1800
1300 NORTH SEVENTEENTH STREET
ARLINGTON, VA 22209

(21) Appl. No.: 09/791,830

(22) Filed: Feb. 26, 2001

(30) Foreign Application Priority Data

Oct. 27, 2000 (JP) 2000-328080

Publication Classification

(51) Int. Cl.[7] B23K 20/12

(52) U.S. Cl. 228/112.1; 228/2.1

(57) ABSTRACT

The end of a face plate **11** of a hollow member **10** is abutted against the end of a face plate of a hollow member **20**. The end of a face plate **21** is stacked to a protrusion **15**. A small-diameter portion **52** of a rotary tool **50** is inserted to the abutted area, and the tool **50** is moved along the abutted region while being rotated in the right direction observed from the large-diameter portion **51**. The direction of movement is from the front of the drawing of FIG. **1** toward the far end thereof. In FIG. **1**, the pressure of mobilized metal is greater in the right side of the axial center of the rotary tool. The thickness of the member from the tip of the inserted small-diameter portion **51** to the hollow areas **10***b* and **10***a* is thicker at the right side. Accordingly, the thickness of the member is greater at the right side of the tool where the pressure is higher, thus preventing metal from flowing out into the hollow region **10***a*. Since the member positioned to the left side of the tool is thinner, the weight of the bonded member is reduced.

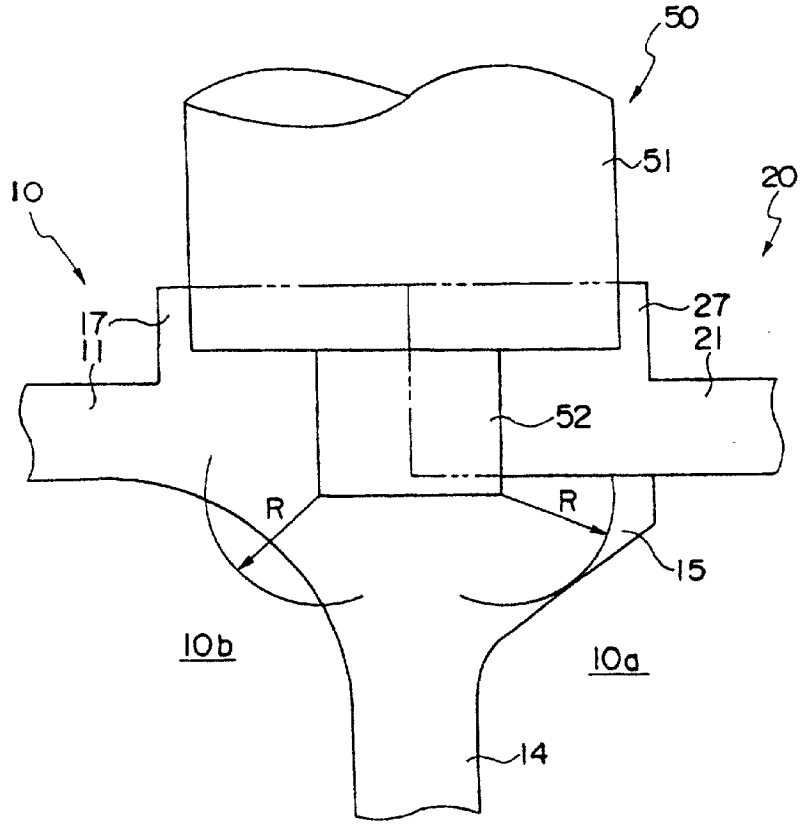

10, 20: hollow member, 10a, 10b: hollow portion,
11, 21: face plate, 50: rotary tool,
14: connecting plate, 51: large-diameter portion
15: protrusion, 52: small-diameter portion

Fig. 1

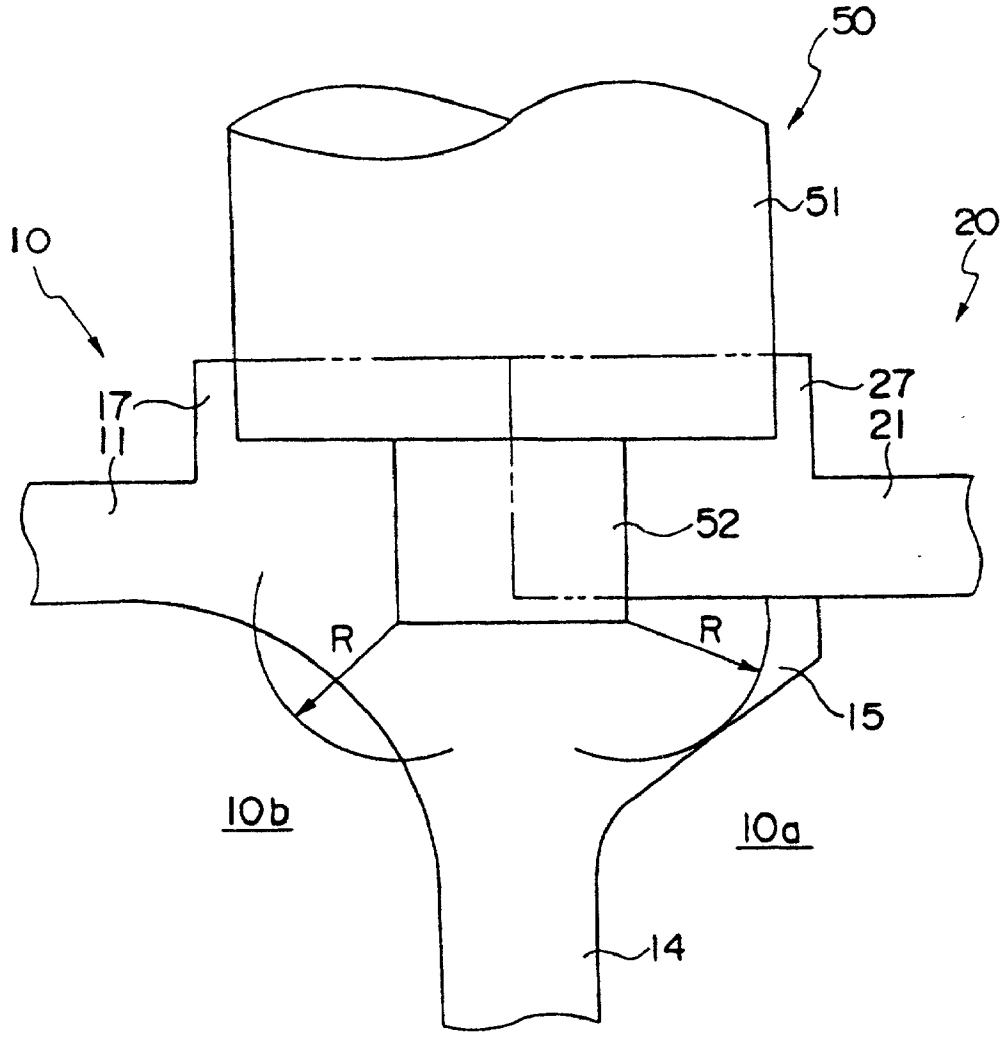

10, 20: hollow member, 10a, 10b: hollow portion,
11, 21: face plate, 50: rotary tool,
14: connecting plate, 51: large-diameter portion
15: protrusion, 52: small-diameter portion

Fig. 2

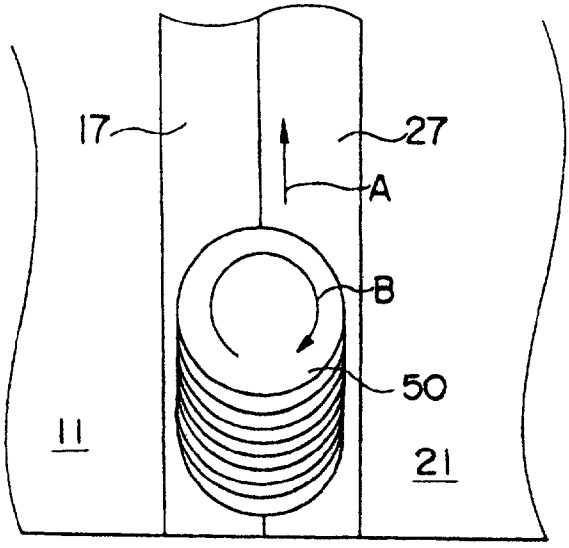

Fig. 3

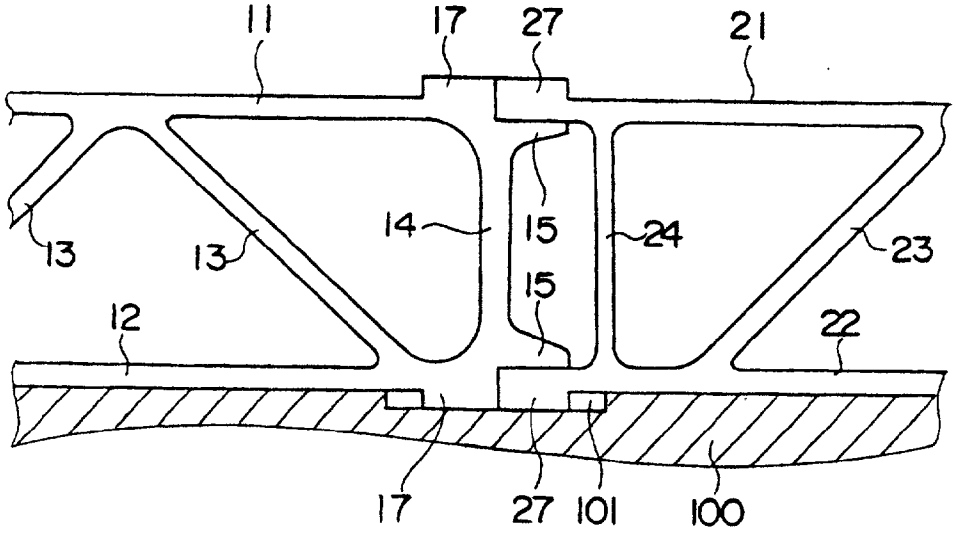

Fig. 4

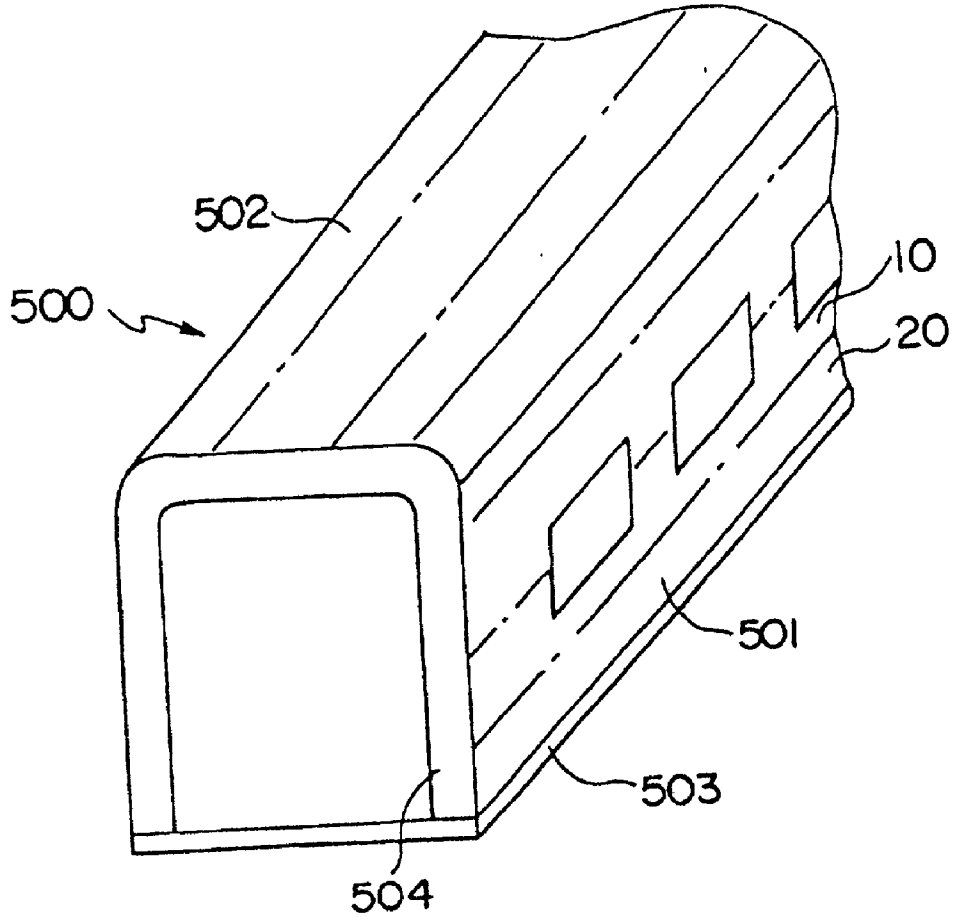

Fig. 5

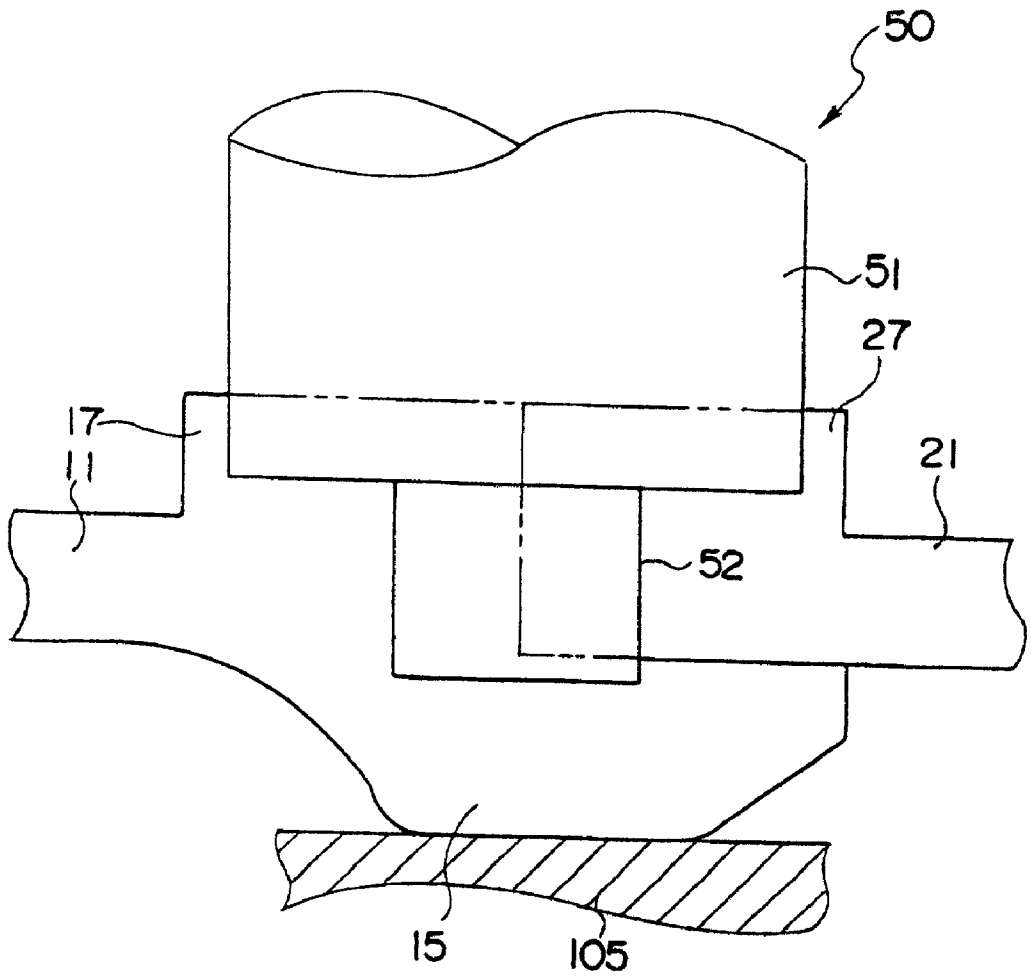

FRICTION STIR BONDING METHOD

FIELD OF THE INVENTION

[0001] The present invention relates to a friction stir bonding method, and is especially preferable for application to bonding hollow members.

DESCRIPTION OF THE RELATED ART

[0002] A friction stir bonding method is a method for bonding members by inserting a round shaft (called a rotary tool) to a joint portion and moving the tool along the joint line, thereby heating, mobilizing and plasticising the joint portion in order to perform solid-phase bonding of the members. The rotary tool comprises a large-diameter portion and a small-diameter portion. The small-diameter portion is to be inserted to the members to be bonded, and the end surface of the large-diameter portion contacts the members. The small-diameter portion is equipped with a screw.

[0003] Moreover, a convex portion is formed to the area where the rotary tool is to be inserted between the two members to be bonded, and the metal material forming the convex portion is mobilized to fill the gap between the two members. The large-diameter portion of the rotary tool is arranged to fit within the convex portion.

[0004] Since the rotary tool must be inserted to the metal of the joint portion, great force is applied to the joint portion. Therefore, when bonding hollow members, the portion of a connecting plate connecting the two face plates of a hollow member is positioned at the friction-stir-bonding position between another hollow member. The friction stir bonding is carried out while the connecting plate receives the force applied to the joint, and therefore, deformation of the hollow members is prevented.

[0005] These methods are disclosed in Japanese Patent Laid-Open Publication No. 11-90655 (U.S. Pat. No. 6,050,474).

SUMMARY OF THE INVENTION

[0006] Friction stir bonding is carried out by inserting a rotary tool to the members to be bonded, thereby plasticising and mobilizing the metal material thereof. If the thickness of the material from the tip portion of the small-diameter portion of the inserted rotary tool to the back surface of the bonded member (opposite to the large-diameter portion) is small, the mobilized metal may flow out to the back surface thereof. Even if the material does not flow out, the member will be expanded outwardly. Such phenomenon is also included in the meaning of the term "flow-out" used hereinafter in the specification. Because of this flow-out, the thickness of the protrusion compensating for the flow-out metal material must be increased. The flow-out also causes holes to be generated to the joint portion. In an attempt to prevent the flow-out, the thickness of the member is increased so that the distance from the tip of the small-diameter portion to the back surface of the member is increased. However, this increases both the weight of the member and the manufacturing cost thereof.

[0007] The object of the present invention is to provide a friction stir bonding method enabling a lightweight bond having good characteristics.

[0008] Based on various studies related to friction stir bonding, it is now discovered that the pressure of the metal mobilized by the rotation of the rotary tool is not even within the range of influence of the rotary tool to the axial direction, but the pressure is different according to position. It is considered that the position receiving higher pressure is determined by the direction of rotation of the rotary tool and the direction of movement of the tool.

[0009] The friction stir bonding method according to the present invention characterizes in positioning the portion of the member having greater thickness, from the tip of the small-diameter portion to the back surface of the member, where the mobilized metal has the greatest pressure.

BRIEF DESCRIPTION OF THE DRAWINGS

[0010] **FIG. 1** is a vertical cross-sectional view showing the joint portion according to one embodiment of the present invention;

[0011] **FIG. 2** is a plan view of **FIG. 1**;

[0012] **FIG. 3** is a vertical cross-sectional view showing one pair of hollow members according to one embodiment of the present invention;

[0013] **FIG. 4** is a perspective view showing the body of the railroad car; and

[0014] **FIG. 5** is a vertical cross-sectional view showing the joint portion according to another embodiment of the present invention.

DETAILED DESCRIPTION OF PREFERRED EMBODIMENTS

[0015] One embodiment of the present invention will now be explained with reference to **FIGS. 1 through 4**. A body **500** of a railroad car comprises a side structure **501** constituting the side surfaces, a roof structure **502** constituting the roof, an underframe **503** constituting the floor, and an end structure **504** constituting the longitudinal edge portions of the car. The side structure **501**, the roof structure **502** and the underframe **504** are each formed by bonding plural extruded members **10, 20**. The longitudinal direction (the extruded direction) of the extruded members **10, 20** are arranged to the longitudinal direction of the car body **500**. The extruded members **10, 20** are hollow members made of aluminum alloy.

[0016] The structure of the hollow members **10, 20** constituting the side structure **501** will now be explained. The hollow members constituting the other areas are similarly formed.

[0017] The hollow member **10 (20)** comprises two substantially parallel face plates **11 (21)**, **12 (22)**, and a plural number of connecting plates **13 (23)** connecting the two face plates. The connecting plates **13 (23)** are each tilted against the face plates **11 (21)** and **12 (22)**. In other words, the face plates **11 (21)**, **12 (22)** and the connecting plates **13 (23)** constitute a truss.

[0018] A connecting plate **14 (24)** formed to the end portion of the hollow member **10 (20)** in the width direction is orthogonal to the face plates **11, 12 (21, 22)**. The outer surface of the joint between the connecting plate **14** and the face plate **11 (12)** is a convex portion for receiving the face

plate **21** (**22**) of the hollow member **20**. The end portion of the hollow member **10** is stacked on the face plates **21**, **22** of the hollow member **20**. The ends of the face plates **11**, **12** are each provided with a protrusion **15** for supporting the face plate **21** or **22**. The protrusion **15** is protruded from the connecting plate **14**. The protrusion **15** is connected to the concave portion.

[**0019**] The end of the face plates **11**, **12** (**21**, **22**) are each provided with a convex portion **17** (**27**) extending outward from the outer surface of the hollow members **10**, **20** (protruded outward in the direction of thickness). The end surface of the face plates **11**, **21** (**21**, **22**) and the convex portion **17** (**27**) is formed along the direction of thickness of the hollow member **10** (**20**). The end surface of the face plates **11**, **21** and the convex portion **17** (in other words, the convex portion close to the face plates **11**, **12**) is positioned near the center of thickness of the connecting plate **14**. The end surface of the face plate **11** (**12**) and the convex portion **17** of the hollow member **10** is abutted against the end surface of the face plate **21** (**22**) and the convex portion **27** of the hollow member **20**.

[**0020**] The face plate **11** (**12**) and the face plate **21** (**22**) are positioned along the same face, and the protruded margin of the convex portions **17** and **27** are equal. The width of the two convex portions **17**, **27** are equal. The width of the two convex portions is greater than the diameter of the large-diameter portion **51** of the rotary tool **50**. The metal forming the convex portions **17**, **27** is used as the source material for filling the gap of the abutted portions.

[**0021**] Upon bonding, the two hollow members **10**, **20** are fixed on a base **100**. Reference number **101** refers to a groove to which the convex portions **17**, **27** formed to the lower surface is inserted.

[**0022**] The rotary tool **50** comprises a large-diameter portion **51** and a small-diameter portion **52** mounted on the end of the large-diameter portion **51**. The small-diameter portion **52** is equipped with a screw. Upon bonding, the rotary tool **50** is inserted to the abutted portions. The bottom area of the large-diameter portion **51** is positioned within the convex portions **17**, **27**. The small-diameter portion **52** is inserted to the abutted portions between the face plates **11** and **21**. The lower end of the small-diameter portion **52** is somewhat inserted to the protrusion **15**. While rotating the rotary tool **50**, the tool is moved along the joint line of the abutted portions.

[**0023**] After inserting the rotary tool **50** to the area to be bonded, the rotary tool **50** is moved from the closer side of the drawing of **FIG. 1** to the farther side thereof. In **FIG. 2**, which is a plan view of **FIG. 1**, arrow A shows the direction of movement of the rotary tool **50**, and arrow B shows the direction of rotation of the rotary tool **50**. The screw of the small-diameter portion **52** is a left-hand screw. When observing the small-diameter portion **52** from the large-diameter portion **51**, the rotational direction of the rotary tool **50** is rightward (clockwise). When looking forward from the rotary tool **50** toward the direction of movement, the protrusion **15** is positioned to the right from the center of axis of the rotary tool **50**, as shown in **FIG. 1**.

[**0024**] After the friction stir bonding of the upper surface shown in **FIG. 3** is finished, the hollow members **10**, **20** are reversed, and friction stir bonding is similarly performed to the other side.

[**0025**] The pressure provided to the metal material of the joint portion mobilized by the rotary tool **50** is greater in the right side of the axial center of the rotary tool **50** than the left side thereof in the direction of movement of the rotary tool **50**. The right-hand rotation of the rotary tool **50** is considered to cause this phenomenon, the rotation pushing the material existing in front of the rotary tool **50** that has not yet been bonded toward the right side of the tool.

[**0026**] In **FIG. 1, a** hollow area **10***b*, **10***a* exists on the left and right sides of the connecting plate **14**. The distance from the tip of the small-diameter portion **15** inserted to the joint portion to the left and right hollow areas **10***b*, **10***a* is set so that the distance from the tip to the protrusion **15** existing in the right side is greater than to the left side. Since the protrusion **15** must support the face plate **21**, the thickness of the protrusion is relatively thick. Therefore, the thickness of the area of the member receiving higher pressure is designed thicker. The mobilized metal will not flow out into the hollow area **10***a* because of this thickness of the protrusion **15**, and therefore, no hole will be generated within the joint portion.

[**0027**] On the other hand, the pressure provided to the left side of the rotary tool **50** is relatively low compared to the right side thereof. The reason for this is considered to be because no unbonded metal exists behind the rotary tool **50**.

[**0028**] Since the left side of the axial center of the rotary tool receives small inner pressure, the thickness of the member measured from the tip of the small-diameter portion **52** to the hollow portion **10***b* of the left side of the connecting plate **13** can be reduced. This enables to lighten the weight of the hollow member **10**.

[**0029**] The "thickness of the member beginning from the tip of the inserted small-diameter portion **52** to the hollow portions **10***b* or **10***a*" will now be explained with reference to **FIG. 1**. The thickness of the metal needed in order to prevent the flow-out of metal at the side receiving higher pressure is set as R. Thickness R is necessary t the right side of the axial center of the small-diameter portion **52** measured from the tip of the portion **52**. In other words, the member on the right of the small-diameter portion **52** must have a thickness of radius R centering at the right-end corner of portion **52**. The term "thickness of the member beginning from the tip of the inserted small-diameter portion **52** to the hollow portion lob" refers to the thickness in the horizontal direction as well. The thickness of the member to the left of the axial center of the small-diameter portion **52** is smaller than thickness R.

[**0030**] We will now consider a comparison example, where the direction of the screw and the rotating direction of the rotary tool **50** is the same as the above-mentioned embodiment, but the position of the hollow members **10** and **20** are opposite, or in other words, the protrusion **15** is protruded toward the left side of the rotary tool **50**. In this case, the thinner member is positioned to the right side of the rotary tool **50** where the pressure is higher, so the mobilized metal material flows out into the hollow space. Therefore, a hole may be generated within the joint portion.

[**0031**] Moreover, when the stacked area of the protrusion **15** and the face plate **21** are placed to the left side of the small-diameter portion, the stacked surface near the joint portion may be knuckled toward the large-diameter portion

51 of the rotary tool **50**, generating a notch. However, if the stacked area is positioned to the right side thereof, the stacked area exists where the pressure is high, and therefore reduces the possibility of generating a notch.

[**0032**] In other words, the area having a greater thickness measured from the tip of the small-diameter portion **52** to the surface of the member opposite the large-diameter portion **51** should be placed where the pressure is higher. The high-pressure region exists at the right side of the rotary tool **50** when observing the tool from behind the direction of movement, if the direction of rotation of the rotary tool **50** is right-hand rotation when observing the tool from the large-diameter portion **41**.

[**0033**] If the screw of the small-diameter portion **52** is a right-hand screw, and if the direction of rotation of the rotary tool **50** is left-handed (counterclockwise), the hollow members **10** and **20** should be oppositely assembled, so that the protrusion **15** is positioned to the left of the axial center of the rotary tool **50**.

[**0034**] **FIG. 5** shows the present bonding method applied to bond non-hollow members. The face plates **12**, **22** and connecting plates **14**, **24** are removed from the hollow members **10** and **20** of **FIG. 2**. The back surface of the joint portion is mounted on a flat base **105**.

[**0035**] The technical scope of the present invention is not limited to the terms used in the claims or in the summary of the present invention, but is extended to the range in which a person skilled in the art could easily substitute based on the present disclosure.

[**0036**] According to the friction stir bonding of the present invention, a lightweight bond having good characteristics is provided.

We claim:

1. A friction stir bonding method for bonding a first member and a second member, the first member comprising a plate and a protrusion protruding substantially parallel to said plate from the end portion of said plate and arranged at a retreated position from one surface of said plate, said friction stir bonding method comprising the steps of:

superimposing the end portion of said second member on said protrusion, and abutting said end portion of said second member against the end portion of said plate; and

friction stir bonding the abutted portions using a rotary tool having a small-diameter portion mounted on the end of a large-diameter portion, by inserting said small-diameter portion to said abutted portions; wherein

the rotary tool is positioned so that when observed from the direction from which said tool moves along said abutted portions, the distance from the tip portion of said inserted small-diameter portion to the surface of said first member opposite from said large-diameter portion is greater in the right side of the axial center of said rotary tool than the left side thereof; and

said rotary tool is rotated in the right direction when observed from the large-diameter portion side while being moved along said abutted portions.

2. A friction stir bonding method according to claim 1, wherein said protrusion is positioned to said right side when performing said friction stir bonding.

3. A friction stir bonding method according to claim 1 wherein the tip portion of said small-diameter portion is inserted to said protrusion when performing said friction stir bonding.

4. A friction stir bonding method for bonding a hollow member comprising two substantially parallel face plates, a connecting plate for connecting said two face plates, a protrusion protruding substantially parallel to one face plate from said connecting plate, and a concave portion recessed both from the outer side of said one face plate and from the protruded direction of said protrusion at the joint portion joining said one face plate, said connecting plate and said protrusion; said friction stir bonding method comprising the steps of:

superimposing the end portion of a second member on said concave portion, and abutting said end portion of said second member against the end portion of said one face plate; and

friction stir bonding the abutted portions using a rotary tool having a small-diameter portion mounted on the end of a large-diameter portion, by inserting said small-diameter portion to said abutted portions and said protrusion; wherein

said protrusion is positioned to the right side of the axial center of said rotary tool when said rotary tool is observed from the direction from which said tool moves along said abutted portions;

the distance from the tip portion of said inserted small-diameter portion to the surface of said hollow member opposite from said large-diameter portion is greater in the right side of the axial center of said rotary tool having said protrusion than the left side thereof, when observed from the direction from which said tool moves; and

said rotary tool is rotated in the right direction when observed from the large-diameter portion side while being moved along said abutted portions.

5. A friction stir bonding method for bonding a first member and a second member, the first member comprising a plate and a protrusion protruding substantially parallel to said plate from the end portion of said plate and arranged at a retreated position from one surface of said plate, said friction stir bonding method comprising the steps of:

superimposing the end portion of said second member on said protrusion, and abutting said end portion of said second member against the end portion of said plate; and

friction stir bonding the abutted portions using a rotary tool having a small-diameter portion mounted on the end of a large-diameter portion, by inserting said small-diameter portion to said abutted portions; wherein

the rotary tool is positioned so that when observed from the direction from which said tool moves along said abutted portions, the distance from the tip portion of

said inserted small-diameter portion to the surface of said first member opposite from said large-diameter portion is greater in the left side of the axial center of said rotary tool than the right side thereof; and

said rotary tool is rotated in the left direction when observed from the large-diameter portion side while being moved along said abutted portions.

6. A friction stir bonding method according to claim 5 wherein said protrusion is positioned to said left side when performing said friction stir bonding.

7. A friction stir bonding method according to claim 5, wherein the tip portion of said small-diameter portion is inserted to said protrusion when performing said friction stir bonding.

8. A friction stir bonding method for bonding a hollow member comprising two substantially parallel face plates, a connecting plate for connecting said two face plates, a protrusion protruding substantially parallel to one face plate from said connecting plate, and a concave portion recessed both from the outer side of said one face plate and from the protruded direction of said protrusion at the joint portion joining said one face plate, said connecting plate and said protrusion; said friction stir bonding method comprising the steps of:

superimposing the end portion of a second member on said concave portion, and abutting said end portion of said second member against the end portion of said one face plate; and

friction stir bonding the abutted portions using a rotary tool having a small-diameter portion mounted on the end of a large-diameter portion, by inserting said small-diameter portion to said abutted portions and said protrusion; wherein

said protrusion is positioned to the left side of the axial center of said rotary tool when said rotary tool is observed from the direction from which said tool moves along said abutted portions;

the distance from the tip portion of said inserted small-diameter portion to the surface of said hollow member opposite from said large-diameter portion is greater in the left side of the axial center of said rotary tool having said protrusion than the right side thereof, when observed from the direction from which said tool moves; and

said rotary tool is rotated in the left direction when observed from the large-diameter portion side while being moved along said abutted portions.

* * * * *