Nov. 11, 1952 CHI CHANG CHU 2,617,921

CHECKING MEANS FOR WAYSIDE TRAIN CONTROL INDUCTORS

Filed May 27, 1950

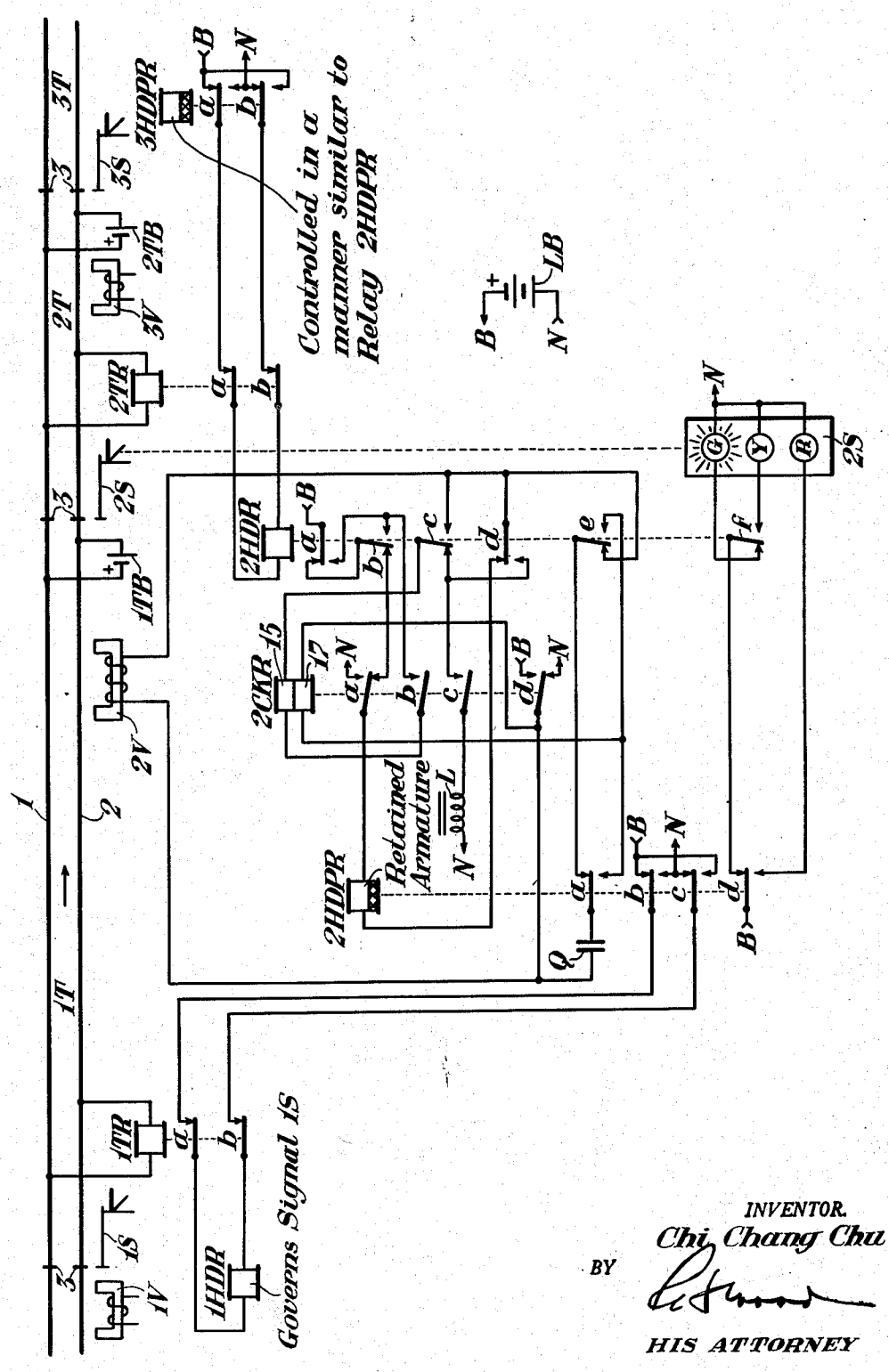

Patented Nov. 11, 1952

2,617,921

UNITED STATES PATENT OFFICE

2,617,921

CHECKING MEANS FOR WAYSIDE TRAIN CONTROL INDUCTORS

Chi Chang Chu, Pittsburgh, Pa., assignor to Westinghouse Air Brake Company, a corporation of Pennsylvania

Application May 27, 1950, Serial No. 164,685

13 Claims. (Cl. 246—28)

1

My invention relates to automatic train control system of the intermittent inductive type, and particularly to means for checking the wayside inductors employed in such systems to insure that the inductor is in proper condition to cooperate with the train-carried apparatus.

Train control systems of this type have inductors located at the entrance of each track section. Each inductor has a U-shaped core having a winding thereon and the inductors cooperate with train-carried equipment so that if at the time the train passes over an inductor the circuit of the winding is open, or if current is flowing in a given direction through the inductor winding, the train-carried equipment will operate to apply the brakes, while if at the time the train passes over the inductor the winding of the inductor is short circuited, or if current is flowing in the opposite direction through the inductor winding, the train-carried equipment is not affected.

It has previously been proposed to check the integrity of the wayside inductor by providing a relay connected in series with the inductor winding so that if the inductor is damaged or removed, or the circuit otherwise opened, the series checking relay will be released, and govern the associated signal or a signal in the rear of the inductor location to indicate that the apparatus is not in its proper condition. However, it is also necessary to check that the winding of the inductor does not become short circuited, except by operation of the controlling relays, since a short circuit in the winding itself or in the connecting wires might result in the erroneous operation of the train-carried apparatus, so that with the associated wayside signal displaying a restrictive indication, the train-carried apparatus would not be operated to apply the brakes.

Accordingly, it is an object of my invention to provide checking means for train control inductors and which means will detect whether the inductor is improperly open or short circuited.

Another object of my invention is to provide checking means for train control inductors which will detect an improperly open or short-circuited inductor, and which means provides for supplying energy through the inductor winding in such direction as to further increase or decrease the flux in the train-carried apparatus, to further insure the proper operation of the train-carried apparatus.

2

A further object of my invention is to provide checking means for train control inductors, which means is arranged so that under some conditions, the inductor is checked for an open-circuited winding, under other conditions the inductor is checked for a short-circuited winding, and under still other conditions the inductor is checked for either an open-circuited winding or a short-circuited winding.

Another object of my invention is to provide checking means for train control inductors, in which a low impedance path is provided for the alternating current energy induced in the inductor by the passage of the train-carried apparatus, but a relatively high resistance path is provided for the direct current energy employed in checking the condition of the winding, so that the inductor appears short-circuited insofar as the train-carried apparatus is concerned.

Other objects of my invention and features of novelty thereof will be apparent from the following description, taken in connection with the accompanying drawing.

In practicing my invention, I provide a first auxiliary relay, having a winding of relatively low resistance, which may be governed by the control relays for the associated wayside signal, so that the winding of the first auxiliary relay is connected in series with the winding of the inductor at times to thereby detect an open circuit failure of the inductor. A second auxiliary relay, having a winding of relatively high resistance, is provided, and may be adapted to be governed by the signal control relays in such manner that the winding of the second auxiliary relay is connected across the inductor winding, at times, in which case the second auxiliary relay is released if the inductor winding is short circuited. The circuits may be arranged so that either the short circuit check or the open circuit check or both are applied as determined by the signal control relay which governs the associated wayside signal. In order to provide an equivalent short circuited inductor for the train-carried apparatus, a condenser is connected across the inductor winding at times, to thereby offer a low impedance path for the energy induced in the inductor winding by the passage of the train-carried apparatus. Ad-

ditionally, the direct current energy which is passed through the inductor winding for checking purposes is arranged to flow in the proper direction to assist in properly influencing the train-carried apparatus. The checking relays may govern additional traffic governing means in the rear of the inductor, to warn an approaching train that the inductor is not in proper condition.

I shall describe one form of checking means for train control inductor, which means is a preferred embodiment of my invention, and shall then point out the novel features thereof in claims.

The single accompanying drawing is a diagrammatic view showing a stretch of railway equipped with signals for governing movements of traffic in one direction only, and having train control inductors for the control of trains moving through the stretch. It is to be understood that my invention may also be employed in connection with train control systems on single track railways where traffic moves over the stretch in either direction, by providing similar apparatus for the inductors governing the traffic movements in the opposite direction.

Referring to the drawing, the reference characters 1 and 2 designate the track rails of a section of railway track, over which traffic moves in the direction indicated by the arrow, that is, from left to right. The stretch is divided into sections such as section 2T, each of which has associated therewith a wayside signal, such as signal 2S, here shown as being of the well known color-light type, for governing the entrance of traffic into the correspondingly designated track section. These wayside signals are governed by the occupancy of the first and the second sections in advance of the signal to provide a conventional two-block, three indication signaling system. That is, when the first track section in advance of a signal is occupied by a train, the signal will display a red aspect, indicating "stop"; when the first track section in advance is unoccupied and the second track section in advance of a signal is occupied, the signal will display a yellow aspect, indicating "approach next signal prepared to stop"; and when the first and second sections in advance of the signal are unoccupied, the signal will display a green aspect indicating "clear." Each of the track sections is provided with a conventional direct current track circuit, including a track battery, such as battery 1TB, connected across the rails at the exit end of the section, and a track relay, such as relay 1TR, connected across the rails at the entrance end of the section, in order to detect the occupancy of the section by a train. Each of the signals has associated therewith a signal control relay such as relay 2HDR, which governs the associated signal in accordance with the occupancy of the track sections in advance of the signal.

Adjacent the entrance end of each track section, there is provided a trackway inductor designated by the reference character V preceded by the numer of the track section with which the inductor is associated, for example, inductor 2V located at the entrance end of section 2T. Each inductor, as shown, comprises a core carrying a winding, and is adapted to cooperate with train-carried apparatus in such a manner that an automatic application of the brakes occurs or a stop indication is given on a train passing an inductor which is effectively open circuited, but no effect is produced on a passing train when the inductor is effectively short-circuited. Moreover, if a direct current is passed through the inductor winding in one direction or the other, it will tend to increase or decrease the effect upon the train equipment, so that if the inductor is effectively open circuited insofar as the energy induced therein by the passage of the train equipment is concerned, and in addition, direct current energy is flowing in a given direction through the inductor winding, the effect upon the train-carried apparatus is increased over that produced by an inductor which is effectively open circuited but does not have direct current flowing in its winding. A similar condition is found in the case of an inductor which is effectively short circuited insofar as the energy induced therein by the passage of the train equipment is concerned and has a direct current flowing therethrough in the opposite direction to that in which it flows when the inductor is effectively open circuited.

The train-carried apparatus is not illustrated because it forms no part of my invention, but it may be, for example, of the type shown and described in Letters Patent of the United States No. 1,698,470, granted to Paul N. Bossart on January 8, 1929.

Each of the inductors is provided with means for checking the integrity of the inductor, comprising a first auxiliary relay, such as relay 2HDPR, and a second auxiliary relay such as relay 2CKR. The circuits for governing these relays and the associated inductor and the circuits for supplying energy to the signal lamps are shown in detail for signal 2S, but it will be understood that similar equipment is provided for each of the other signals and inductors in the stretch.

At each of the signal locations, energy for the operation of the various relays and signal lamps is provided from a suitable source of direct current, such as the battery LB shown, the positive and negative terminals of which are designated by the reference characters B and N, respectively.

The operation of the circuits associated with signal 2S under various conditions will now be described, and it will be seen that the circuits associated with the other signals in the stretch will operate in a similar manner.

The apparatus is shown in the normal condition, that is, the condition it assumes when there is no train occupying any section in the stretch.

At this time the winding of signal control relay 2HDR is supplied with energy by a circuit which may be traced from terminal B at signal location 3S, over front contact *a* of relay 3HDPR, front contact *a* of relay 2TR, through the winding of relay 2HDR from left to right, front contact *b* of relay 2TR, and front contact *b* of relay 3HDPR to terminal N. Relay 2HDR is of the polarized type, having neutral contacts which are picked up when energy flows through the winding of the relay in either direction and are released when no energy is supplied to the winding of the relay, and also having polar contacts which are operated from a normal to a reverse position when energy is supplied through the winding of the relay in one direction, and are operated to their normal or left-hand position when the winding of the relay is supplied with energy of the opposite polarity. The relay is constructed and arranged so that with energy flowing through the winding from left to right, the polar contacts of the relay will be operated to their left-hand or normal position, and the neutral contacts will be picked up. The first

auxiliary relay 2HDPR is supplied with energy at this time by a circuit which may be traced from terminal B at front contact *a* of relay 2HDR, over normal contact *b* of relay 2HDR, back contact *a* of the second auxiliary relay 2CKR, through the winding of relay 2HDPR from right to left, front contact *d* of relay 2HDR, through the winding of inductor 2V from right to left, and back contact *d* of relay 2CKR to terminal N. Accordingly, relay 2HDPR will have its contacts picked up at this time. A circuit for supplying energy to the green lamp G of signal 2S may be traced from terminal B at front contact *d* of relay 2HDPR, over normal contact *f* of relay 2HDR, and through the green lamp G of signal 2S to terminal N. Accordingly, signal 2S will display a green aspect, indicating "clear."

Under the normal condition, the relay 1HDR, which governs signal 1S, in the rear of signal 2S, in a similar manner to that in which relay 2HDR governs signals 2S, is supplied with energy by a circuit which may be traced from terminal B at front contact *b* of relay 2HDPR, over front contact *a* of relay 1TR, through the winding of relay 1HDR from left to right, front contact *b* of relay 1TR, and front contact *c* of relay 2HDPR to terminal N. Thus, it will be seen that relay 1HDR, which is similar in construction and operation to relay 2HDR, will have its neutral contacts picked up, and its polar contacts will occupy their normal position, so that signal 1S will also display a green aspect.

From the foregoing, it will be seen that, with no train occupying the stretch, the signals will each display a green aspect indicating "clear." When a signal is displaying a green aspect, it is desired that the associated inductor such as inductor 2V will be in such condition that if a train moves by the inductor, the equipment on the train will not be affected so that the train may continue on through the section. Accordingly, at this time it is necessary that the inductor 2V be effectively short circuited insofar as energy induced in the inductor by the passage of the train-carried apparatus is concerned. In order to provide this effective short circuit condition of the inductor, a condenser Q, which has a relatively large capacity, is connected across the winding of inductor 2V by front contact *a* of relay 2HDPR and normal contact *e* of relay 2HDR. The capacity of condenser Q is selected so that at the lowest frequency of energy induced in the inductor 2V, which would be that produced by a train moving by the inductor at a predetermined relatively low speed, the reactance of the condenser Q will be comparable to the reactance of the inductor 2V, so that the combination of the inductor winding and the condenser forms a resonant circuit, and thereby the effective impedance of the circuit is reduced to that represented by the resistance of the winding and the various connections normally. At higher speeds, the frequency will of course be increased, but the reactance of the condenser will be lowered, so that by choice of a condenser of suitable value, say, for example, 4000 microfarads, the impedance may be kept relatively low for the range of train speeds involved. Accordingly, it will be seen that with the condenser Q connected across its winding the inductor 2V is effectively short circuited insofar as the train-carried apparatus is concerned. Moreover, as was previously pointed out, the circuit is arranged so that the direct current energy which flows through the inductor 2V for providing energization of

relay 2HDPR flows through the inductor in such a direction that it prevents the increase of flux in a train-carried apparatus as the train-carried apparatus passes the inductor, which assists in preventing operation of the train-carried equipment. Since the condenser Q is connected across the inductor winding at this time, it will be charged by the direct current energy to some given value. This charge is utilized for picking up relay 2CKR, as will be subsequently described.

Since under normal conditions the signal 2S is clear, and the inductor 2V should be short circuited, it is not necessary to check the inductor winding for a short circuit. Accordingly, the second auxiliary relay, 2CKR is not connected in the inductor circuit at this time.

It will be seen from the foregoing, that when the signal displays a green aspect indicating "proceed," the inductor is checked to insure its integrity, and at the same time it is provided with a relatively low impedance path for the alternating current energy induced in the inductor by the passage of the train-carried equipment, so that should a train pass the inductor at this time no operation of the train-carried apparatus will take place. It will further be seen that should the inductor 2V become displaced for some reason or other by sufficient amount that it no longer would be in a position to cooperate with the train-carried equipment, such displacement of the inductor would likely cause a break in the wires which connect the inductor winding to the various relay circuits, and the circuit for supplying energy to relay 2HDPR would be interrupted and the relay would release. In such case, the contact *d* of relay 2HDPR would interrupt the supply of energy to the green lamp G of signal 2S, and establish a circuit for supplying energy to the red lamp R of signal 2S over back contact *d*. Moreover, the contacts *b* and *c* of relay 2HDPR would reverse the polarity of the energy supplied over the line wires to signal control relay 1HDR which governs signal 1S, so that signal 1S would then display a yellow aspect indicating "approach," so that a train passing signal 1S would be prepared to stop at the next signal, in this case signal 2S. Accordingly, it will be seen that with the apparatus arranged as described, the inductor 2V is effectively checked against an open circuit, or a displacement from its proper position by a sufficient amount to break the connecting wires.

It will now be assumed that a train, moving from left to right, passes the inductor 2V and the signal 2S and enters section 2T with signal 2S displaying a green aspect. When the train enters section 2T, track relay 2TR will release, and its contacts *a* and *b* will interrupt the circuit for supplying energy to the signal control relay 2HDR, and the neutral contacts of relay 2HDR will release. When contact *a* of relay 2HDR releases, the circuit previously traced for supplying energy to the first auxiliary relay 2HDPR is interrupted, and relay 2HDPR will release. The circuit for supplying energy to relay 2HDPR is additionally interrupted by front contact *d* of relay 2HDR.

When relay 2HDPR releases, its front contact *a* disconnects the condenser Q from the inductor 2V and its back contact *a* establishes a pick-up circuit for supplying energy previously stored in the condenser Q to the lower winding 1T of relay 2CKR. This pick-up circuit may be traced from the right-hand plate of condenser Q, over back contact *a* of relay 2HDPR, and through the

winding 17 of relay 2CKR from left to right to the left-hand plate or element of condenser Q. Accordingly, the energy previously stored in condenser Q when it was connected in the circuit for inductor 2V is now discharged through the winding 17 of relay 2CKR, and the parts are proportioned and arranged so that the value of this energy is sufficient to cause the contacts of relay 2CKR to pick up. When contact *b* of relay 2CKR picks up, a stick circuit is established for supplying energy to the upper winding 15 of relay 2CKR, which circuit may be traced from terminal B at back contact *a* of relay 2HDR, over front contact *b* of relay 2CKR, through the winding 15 of relay 2CKR from left to right, normal contact *c* of relay 2HDR, front contact *c* of relay 2CKR, and through a reactor L to terminal N. Accordingly, the contacts of relay 2CKR will be retained picked up, after the condenser Q has dissipated all of its charge through winding 17 of relay 2CKR. Moreover, at this time, energy is supplied to the winding of inductor 2V by a circuit which may be traced from terminal B at front contact *d* of relay 2CKR, through the winding of the inductor 2V from left to right, over back contact *d* of relay 2HDR, front contact *c* of relay 2CKR, and through the reactor L to terminal N. It will be apparent that the winding 15 of relay 2CKR and the winding of inductor 2V are effectively energized in multiple at this time from the direct current source.

The resistance of the winding 15 of relay 2CKR is selected and proportioned so that it has a relatively high resistance in comparison with the resistance of the winding of inductor 2V. The parts are proportioned so that, as long as the winding of inductor 2V is intact and not short circuited, the current which flows through winding 15 of relay 2CKR is sufficient to keep the contacts of relay 2CKR picked up. However, if the winding of inductor 2V should become short circuited for any reason, it will effectively shunt the winding 15 of relay 2CKR, and the current flow through winding 15 of relay 2CKR will be reduced to the point where the relay will release its contacts. If relay 2CKR becomes released due to a short circuited inductor, contact *b* of the relay opens the stick circuit previously traced, so that the relay remains released. It will be seen therefore that the second auxiliary relay 2CKR serves to determine whether or not the winding of inductor 2V is short circuited when the train occupies the section 2T.

When signal 2S is displaying a red aspect due to the train in section 2T, the inductor 2V should represent an effective open circuit for any train-carried apparatus which may pass the inductor. The reactor L, which is connected in series with the winding of inductor 2V, is proportioned and arranged so that although it affords little resistance to the flow of the direct current energy through the inductor winding, it will present a relatively high impedance to alternating current energy induced in the inductor by the passage of train-carried equipment. Also, the winding 15 of relay 2CKR, which is now connected across the winding of the inductor, presents a relatively high impedance to the alternating current energy induced in the inductor due to the passage of the train-carried equipment. Accordingly, insofar as the train-carried apparatus is concerned the inductor 2V is open circuited at this time, and should a train proceed past the inductor the train-carried apparatus will operate to initiate an automatic brake application. Moreover, it will be seen that the flow of direct current energy through the winding of inductor 2V at this time is in the opposite direction to that previously traced when signal 2S was displaying a "clear" aspect. The parts are proportioned and arranged so that the flux set up by the current flow through the winding of inductor 2V at this time is such as to cause an increase in the flux in the train-carried apparatus, thereby further assisting in providing the proper operation of the train-carried equipment to initiate an automatic brake application if it passes the inductor.

With the signal 2S at "stop," it will be seen that it is not necessary to check the inductor winding for an open circuit, as relay 2HDPR is already released due to the fact that relay 2HDR is released, so that the signal 1S in the rear of signal 2S is already displaying an "approach" aspect because signal 2S is displaying a "stop" aspect.

When the train vacates section 2T and is occupying section 3T, relay 2TR will pick up, and at this time relay 3HDPR is released, so that energy of the opposite polarity is supplied to relay 2HDR. Accordingly, the polar contacts of relay 2HDR will be operated to their reverse position following which the neutral contacts of the relay will pick up.

It will be seen that the relay 2CKR is retained picked up by its stick circuit during the reversing and picking up of the relay 2HDR because when the normal contacts of relay 2HDR release, the relay 2CKR, which was previously energized by the stick circuit traced above, is retained picked up first by another stick circuit which may be traced from terminal B at back contact *a* of relay 2HDR, over front contact *b* of relay 2CKR, through the winding 15 of relay 2CKR from left to right, reverse polar contact *c* of relay 2HDR, back contact *d* of relay 2HDR, front contact *c* of relay 2CKR and through the reactor L to terminal N. Then when the neutral contacts of relay 2HDR pick up a stick circuit is completed from terminal B over front contact *a* of relay 2HDR, reverse contact *b* of relay 2HDR, front contact *b* to relay 2CKR, through the winding 15 from left to right, reverse contact *c* of relay 2HDR, front contact *d* of relay 2HDR, through the winding of relay 2HDPR from left to right and front contact *a* of relay 2CKR to terminal N.

At this time, the relay 2HDPR is also energized by a second circuit in multiple with the above traced stick circuit for relay 2CKR and which second circuit can be traced from terminal B at front contact *d* of relay 2CKR, through the winding of inductor 2V from left to right, front contact *d* of relay 2HDR, through the winding of relay 2HDPR from left to right and over front contact *a* of relay 2CKR to terminal N.

Accordingly, it will be seen that the second auxiliary relay 2CKR is effectively connected in multiple across the winding of inductor 2V, and the winding of relay 2HDPR is effectively connected in series with the winding of inductor 2V when the section 2T is unoccupied and the section 3T is occupied.

With relay 2HDPR picked up and relay 2HDR having its polar contacts in their reverse positions, a circuit is established for supplying energy to the yellow lamp Y of signal 2S, which circuit may be traced from terminal B at front contact *d* of relay 2HDPR, over reverse polar contact *f* of relay 2HDR, and through the yellow lamp Y of signal 2S to terminal N. Accordingly, signal 2S at this time will display a yellow aspect indicating

"approach" the next signal prepared to "stop." With relay 2HDPR picked up, its contacts *b* and *c* establish a circuit for supplying energy of normal polarity over the line wires and contacts *a* and *b* of relay 1TR to the winding of relay 1HDR, so that signal 1S in the rear of signal 2S displays a green aspect indicating "clear."

The winding of relay 2HDPR which is now connected in series with the winding of the inductor 2V with the battery presents a relatively high impedance to the alternating current energy induced in the inductor due to the passage of a train-carried equipment. Also, as stated hereinbefore, the winding 15 of relay 2CKR when it is connected across the inductor winding presents a relatively high impedance to the energy induced in the inductor by a train-carried equipment. It follows that the inductor 2V is in effect open circuited when the signal 2S displays its yellow aspect and should a train moving from left to right pass over the inductor it will initiate an automatic brake condition on the train. It is to be pointed out that in train control systems of the type here involved the equipment is usually arranged so that an automatic brake application is initiated when a train passes over an inductor at an approach signal. It is to be observed that these train control systems are generally provided with means wherewith an automatic brake application can be forestalled by the proper operation of the apparatus on the train by the engineman.

If at this time the inductor 2V should become displaced or damaged in such manner as to break the circuit including the inductor winding, the supply of energy to the winding of relay 2HDPR will be interrupted and the contacts of relay 2HDPR will be released. When contact *d* of relay 2HDPR releases it establishes the previously traced circuit for supplying energy to the red lamp R of signal 2S, and additionally, its contacts *b* and *c* pole change the energy supplied to relay 1HDR so that signal 1S displays a yellow aspect. Accordingly, the inductor 1V at signal location 1S is placed in condition to cause an automatic application of the brakes of a train which passes the signal at this time, so that the train will be stopped before reaching the damaged or displaced inductor. Moreover, if the inductor 2V or the wires connecting the inductor with the apparatus become short circuited, the resulting short circuit will effectively shunt the supply of energy from the winding 15 of relay 2CKR, so that relay 2CKR will release its contact. With polar contact *b* of relay 2HDR in its reverse position, if contact *a* of relay 2CKR becomes released the supply of energy to the winding of relay 2HDPR is interupted, so that the signal 2S is governed to display a red aspect, and the signal 1S in the rear of signal 2S is governed to display a yellow aspect.

It will be seen, therefore, that in the event of a displaced, damaged or short circuited inductor at any of the signal locations in the stretch, the associated signal will be governed to display a "stop" aspect, and the next signal in the rear will be governed to display a yellow aspect, and additionally, the inductor associated with the signal in the rear of the damaged inductor will be placed on an open circuit status, to initiate the application of the brakes of a train passing the signal.

When the train in question clears section 3T in advance of signal 3S, the relay 3HDPR, which is controlled in a manner similar to relay 2HDPR, will become picked up, thereby pole changing the energy supplied to relay 2HDR. When the polarity of the energy supplied to relay 2HDR is reversed, the neutral contacts of relay 2HDR release, the polar contacts are operated to their normal position, and thereafter the neutral contacts of the relay pick up again, in the well known manner of operation of polarized relays and the apparatus is restored to its normal condition as shown in the drawing.

When the apparatus is restored to normal, energy is supplied to the winding of relay 2HDPR by the circuit previously traced and by which circuit the direction of the flow of current through the winding of relay 2HDPR is reversed from that flowing in the relay when the signal 2S displays its yellow aspect. The reversal of direction of current flow through the circuit including the winding of relay 2HDPR at this time does not result in the release of the contacts of relay 2HDPR, since this relay is of the retained armature type, that is, the relay is constructed and arranged so that the contacts do not release when the supply of energy to the winding of the relay is reversed, provided that such reversal occurs within a predetermined time interval, which interval is longer than the time of reversal of the contact of the polarized relay 2HDR. Accordingly, the contacts of relay 2HDPR in the lighting control circuit for signal 2S and the pole changing contacts in the circuit for governing relay 1HDR of the signals in the rear do not release at this time, so that the signal 2S is prevented from displaying a momentary red aspect while the indication is changing from yellow to green and signal 1S continues to display a green aspect. With contact *d* of relay 2HDR picked up and normal polar contact *f* of relay 2HDR closed, the circuit for supplying energy to the green lamp G is again established, so that signal 2S again displays a green aspect.

It will be seen from the foregoing, that I have provided checking means for wayside inductors of an automatic train control system, employing a low resistance relay adapted to be connected in series with the inductor at times, and a high resistance auxiliary relay adapted to be connected in multiple with the winding of the inductor at times, to thereby check the integrity of the connections to the inductor winding, and to continuously provide detection of an open circuited inductor; a short circuited inductor, whether caused by mechanical derangement of the inductor or its winding, or a short or an open circuit in the wiring which connects the inductor with the wayside relay.

Although I have herein shown and described only one form of checking means for train control inductors, it is to be understood that various changes and modifications may be made therein within the scope of the appended claims without departing from the spirit and scope of my invention.

Having thus described my invention, what I claim is:

1. In combination with a wayside train control inductor winding susceptible to open or short circuit conditions, checking means for determining whether or not said inductor winding is open circuited or short circuited, comprising a source of energy, a first auxiliary relay having a low resistance winding and a second auxiliary relay having a high resistance winding, a first circuit means for selectively connecting said low resistance winding of said first auxiliary relay and said

inductor winding in series across said source, a second circuit means for selectively connecting said high resistance winding of said second auxiliary relay across said inductor winding, said first auxiliary relay being arranged and proportioned so that its contacts are released when said inductor winding is open circuited, and said second auxiliary relay being arranged and proportioned so that its contacts are released when said inductor winding is short circuited, and indicating means governed by said first and second auxiliary relays.

2. In combination, a wayside train control inductor winding susceptible to open or short circuit conditions, checking means for determining whether or not said inductor winding is open circuited or short circuited, comprising a source of direct current energy, a first auxiliary relay having a low resistance winding and a second auxiliary relay having a high resistance winding, first circuit means for selectively connecting said low resistance winding of said first relay and said inductor winding in series across said source, second circuit means for selectively connecting said high resistance winding of said second relay across said inductor winding, a capacitor, and means for selectively connecting said capacitor across said element for effectively short circuiting said element with respect to alternating current.

3. In combination, a wayside train control inductor winding susceptible to open or short circuit conditions, checking means for determining whether or not said inductor winding is open circuited or short circuited, comprising a source of direct current energy, a first auxiliary relay having a low resistance winding and a second auxiliary relay having a high resistance winding, said high resistance winding having a high reactance, first circuit means for selectively connecting said low resistance winding of said first relay and said inductor winding in series across said source, second circuit means for selectively connecting said high resistance winding of said second relay across said element, a reactor, and means for selectively rendering the impedance of said first circuit means comparatively high with respect to alternating current comprising means for selectively connecting said reactor in series with said low resistance winding of said first relay.

4. In combination, a wayside train control inductor winding susceptible to open or short circuit conditions, checking means for determining whether or not said inductor winding is open circuited or short circuited, comprising a source of direct current energy, a first auxiliary relay having a low resistance winding and a second auxiliary relay having a high resistance winding, said high resistance winding having a high reactance, first circuit means for selectively connecting said low resistance winding of said first relay and said inductor winding in series across said source, second circuit means for selectively connecting said high resistance winding of said second relay across said element, means for effectively short circuiting said element with respect to alternating current, comprising a capacitor and circuit means for selectively connecting said capacitor across said element, and means for selectively rendering the impedance of said first circuit means comparatively high with respect to alternating current comprising a reactor selectively connected in series with said low resistance winding of said first relay.

5. In combination, a train control wayside device located along a stretch of railway track, a control circuit for said device, said device being adapted to assume its active train-stopping condition unless said control circuit is closed to present a relatively low impedance to alternating current induced in said device, a control relay for governing said control circuit in accordance with traffic conditions of said stretch of track in advance of said wayside device, a first auxiliary relay having a low resistance winding, a second auxiliary relay having a high resistance winding, first circuit means governed by said control relay for selectively connecting said low resistance winding of the first auxiliary relay in series with said control circuit, second circuit means governed by said control relay for selectively connecting said high resistance winding of the second auxiliary relay in multiple with said device in said control circuit, a source of direct current energy having connections to said control circuit governed by said control relay, whereby said first auxiliary relay is energized when the control circuit for said device is not open circuited and said second auxiliary relay is energized when the control circuit for said device is not short circuited, with respect to energy supplied from said source, and traffic governing means in the rear of said device governed by said first and said second auxiliary relays.

6. In combination, a train control wayside device having a control circuit and adapted to assume an active condition unless said control circuit is closed to present a relatively low impedance to alternating current, a control relay for governing said control circuit, a source of direct current energy, a first auxiliary relay having a low resistance winding, a second auxiliary relay having a high resistance winding, first circuit means governed by said control relay for selectively connecting said low resistance winding of the first auxiliary relay in series with said source in said control circuit, second circuit means governed by said control relay for selectively connecting said high resistance winding of the second auxiliary relay in multiple with said source and said device in said control circuit, and traffic governing means in the rear of said device governed by said first and said second auxiliary relays.

7. In a train control system, in combination, a wayside train control inductor located along a stretch of railway track having a winding and arranged to assume its inactive non-stopping condition when said winding is effectively short circuited with respect to alternating current induced in said winding, and to assume its active stopping condition when said winding is effectively open circuited with respect to alternating current induced in said winding, a control circuit for said winding, a control relay governed by traffic conditions in said stretch in advance of said inductor, means including said control relay for effectively opening or closing said control circuit to effectively render said winding open circuited or short circuited for alternating current induced in the winding, and checking means for determining if said inductor is open circuited or short circuited, comprising a first auxiliary relay having a winding connected in series with said inductor winding, a second auxiliary relay having a winding connected in multiple with said inductor winding, means including a source of direct current energy for energizing said first and said second auxiliary relays, and means governed by said first and second auxiliary relays for indi-

cating the open circuited or short circuited condition of said inductor winding.

8. Trackway apparatus for automatic train control and signaling systems comprising, an inductive traffic controlling device for transmitting control influences to a moving vehicle under adverse traffic conditions ahead including a winding which if effectively short circuited by a circuit having a low impedance to alternating current places said device in its inactive condition, a control relay, and checking means for determining if said winding is defective due to an open circuit or a short circuit, said checking means comprising a source of direct current, a first auxiliary relay, a second auxiliary relay, first circuit means governed by said control relay for connecting a winding of said first auxiliary relay in series with said winding of said device and said source, second circuit means governed by said control relay for connecting a winding of said second relay across the said winding of said device in multiple with said source, a condenser governed by said control relay, third circuit means for connecting said condenser across the winding of said device, a reactor, fourth circuit means for connecting said reactor in series with the winding of said device, and a circuit governed by said first and second auxiliary relays.

9. In a railway signaling system for a stretch of track comprising a wayside inductive traffic controlling device for transmitting control influences to a moving vehicle under adverse traffic conditions ahead including a winding which if effectively short circuited by a circuit having a low impedance to alternating current places said device in its inactive condition, control means for said device, and traffic governing means located in the rear of said device, the combination with the foregoing of checking means for determining if said winding is defective due to an open circuit or a short circuit, said checking means comprising a first auxiliary relay having a low resistance winding, a second auxiliary relay having a first and a second winding, said first winding of said second auxiliary relay having a relatively high resistance, a source of direct current, a condenser, a reactor, first circuit means governed by said control means for selectively connecting said low resistance winding of said first auxiliary relay in series with said winding of said device and said source, and for connecting said condenser across said winding, second circuit means governed by said control means for selectively connecting said condenser to the second winding of said second relay for picking up the second relay by energy stored in said condenser, and for connecting said first winding of said second relay in multiple with said source and the winding of said device by a stick circuit including in series a contact of said second relay closed when the second relay is energized, third circuit means for selectively connecting said first relay winding in series with said source, said reactor and the winding of said device and said first winding of said second relay in multiple with the winding of said device, and circuit means governed by said control relay, said first auxiliary relay, and said second auxiliary relay for controlling said traffic governing means in the rear of said device.

10. In combination, a train control wayside inductor having a winding and adapted to assume a restrictive or non-restrictive condition according as it presents in effect an open circuited or short circuited condition of its winding as far as alternating current induced in the winding is concerned, a control relay operable to a first or a second position to represent a restrictive and a non-restrictive traffic condition respectively, a first circuit including second position contacts of said control relay connected across said inductor winding to effectively short circuit the winding for alternating current, checking means including an auxiliary relay and a source of direct current, a second circuit including first position contacts of said control relay to connect a winding of said auxiliary relay and said inductor winding in multiple across said direct current source, said auxiliary relay being energized when said inductor winding is open circuited and de-energized when said inductor winding is short circuited.

11. In combination, a train control wayside inductor having a winding and adapted to assume a restrictive or non-restrictive condition according as the inductor presents a relatively high impedance or a relatively low impedance to alternating current induced in said winding, a capacitor, a direct current source, an auxiliary relay, a control relay, said control relay being operable to a first and a second position to represent a restrictive and a non-restrictive traffic condition, respectively, a first circuit including second position contacts of said control relay to connect said capacitor across said inductor winding for the inductor to present its non-restrictive condition, a second circuit including first position contacts of said control relay to connect a winding of said auxiliary relay and said inductor winding in multiple to said direct current source when said inductor is disconnected from said capacitor to present its restrictive condition, said auxiliary relay being shunted and released in response to said inductor winding being short circuited.

12. In combination with a wayside train control inductor winding susceptible to open and short circuit conditions, checking means for determining whether or not said winding is open circuited or short circuited, comprising a source of energy, a first auxiliary relay having a low resistance winding, a second auxiliary relay having a high resistance winding, a first circuit including in series said source of energy, said low resistance winding of the first auxiliary relay, and said inductor winding, a second circuit including in series said source of energy and said high resistance winding of the second auxiliary relay and said inductor winding connected in multiple, control relay means, said control relay means having contacts operable to different positions in response to different conditions, said contacts being interposed in said first and said second circuits to govern the operation thereof, and indicating means governed by said first and said second auxiliary relays.

13. In a train control system having a wayside train control inductor provided with a winding and effective to assume a non-stopping condition when said winding is effectively short circuited with respect to alternating voltages induced therein and effective to assume a stopping condition when said winding is effectively open circuited with respect to alternating voltages induced in the inductor winding, said system having a control relay governed by traffic conditions and provided with contacts operable to a first and a second position in response to a first and a second traffic condition respectively, and a control circuit for said inductor winding which circuit is closed or open according as said control

relay contacts are operated to said first or second positions, checking means for said wayside inductor comprising, in combination, a first and a second auxiliary relay, a source of direct current, a first checking circuit including in series said direct current source, a winding of said first auxiliary relay, said inductor winding and contacts of said control relay closed in their first position, to thereby check an open circuit of the inductor winding, a second checking circuit including in series said source of current, a winding of said second auxiliary relay and said inductor winding in multiple, and contacts of said control relay

closed in their second position, to thereby check a short circuit of said inductor winding, and traffic governing means governed by said first and second auxiliary relays.

CHI CHANG CHU.

REFERENCES CITED

The following references are of record in the file of this patent:

UNITED STATES PATENTS

Number	Name	Date
1,653,379	Thompson et al.	Dec. 20, 1927