June 27, 1933. E. F. DOMKE ET AL 1,915,881

BED TILTING DEVICE

Filed Dec. 8, 1932 2 Sheets-Sheet 1

Fig. 1.

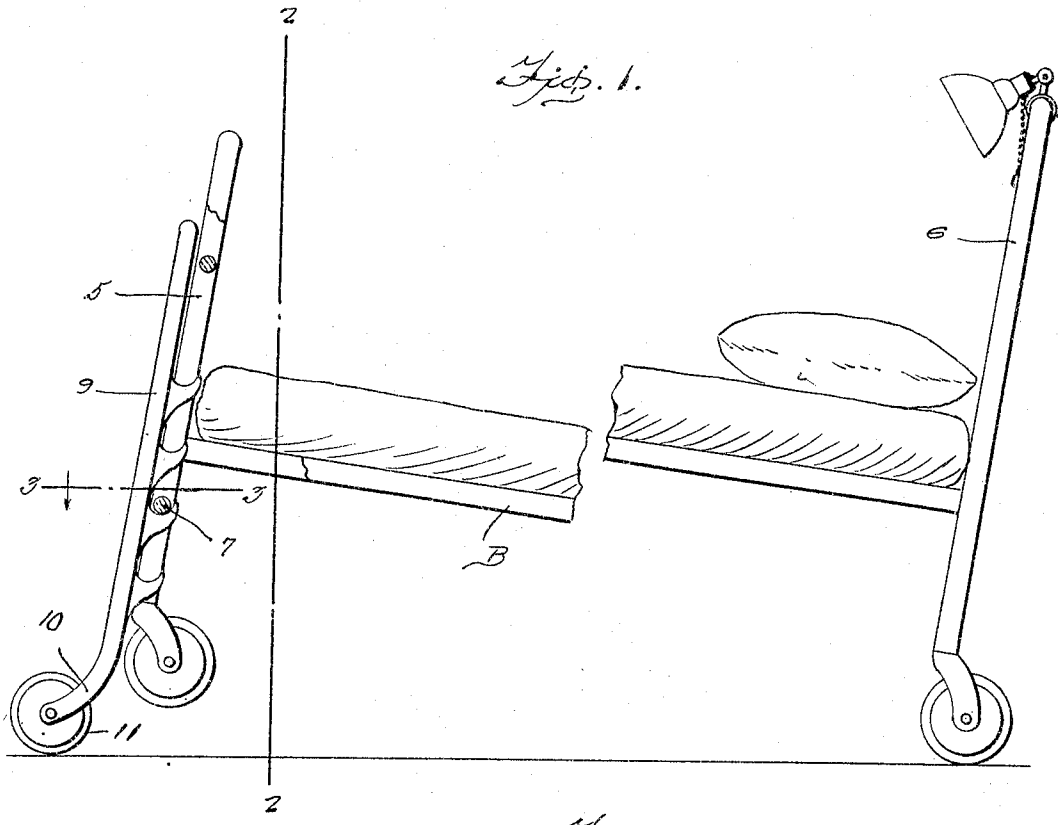

Fig. 4.

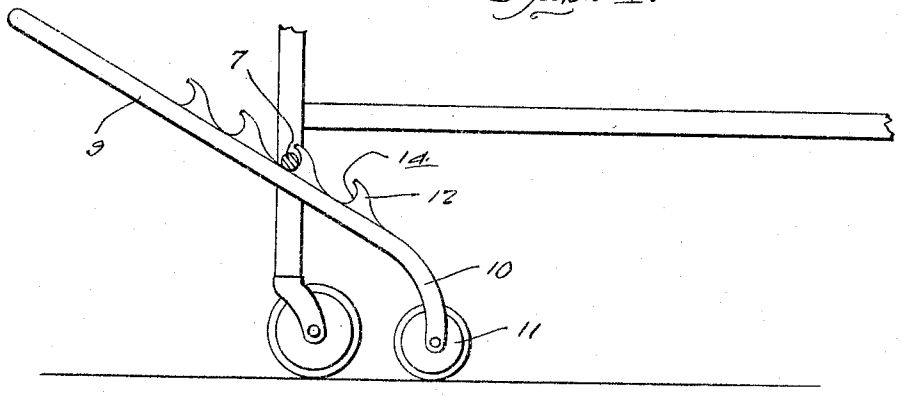

Inventors

E. F. Domke

S. A. J. Ennis

By Clarence A. O'Brien

Attorney

June 27, 1933. E. F. DOMKE ET AL. 1,915,881

BED TILTING DEVICE

Filed Dec. 8, 1932 2 Sheets-Sheet 2

Fig. 2.

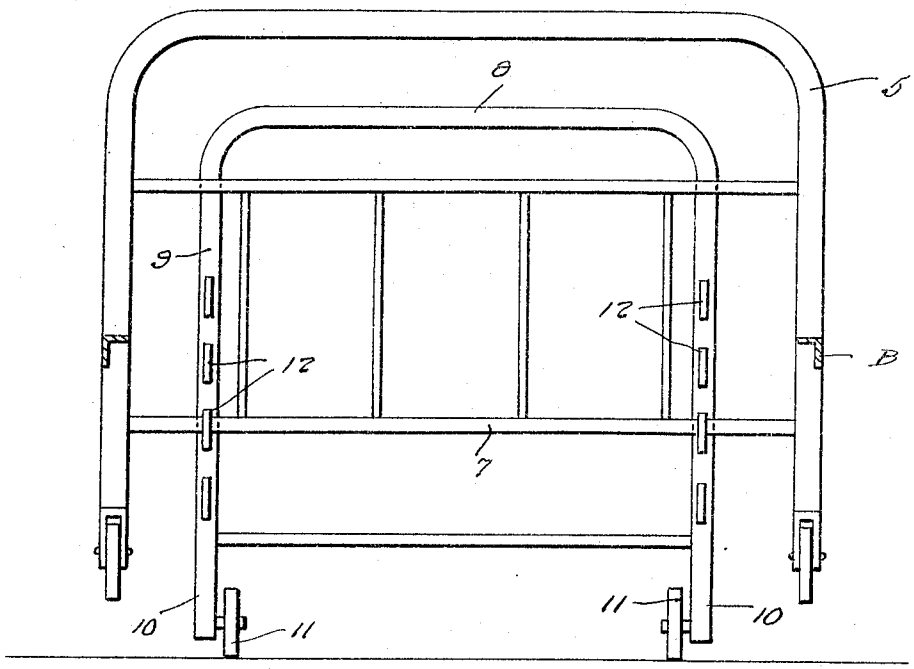

Fig. 3.

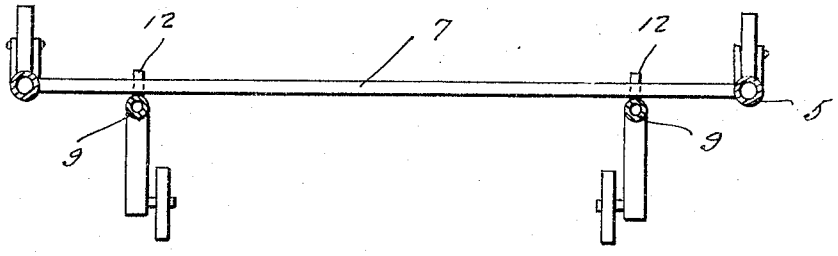

Inventors

E. F. Domke

S. A. J. Ennis

By Clarence A. O'Brien

Attorney

Patented June 27, 1933 1,915,881

UNITED STATES PATENT OFFICE

EDWARD F. DOMKE AND SYLVESTER A. J. ENNIS, OF SHULLSBURG, WISCONSIN

BED TILTING DEVICE

Application filed December 8, 1932. Serial No. 646,320.

The present invention relates to a device for tilting beds in hospitals, sick rooms and the like when such is desirable and the object of the invention resides in the provision of a device of this nature which is simple in its construction, inexpensive to manufacture, easy to manipulate, thoroughly efficient and reliable in use and operation and otherwise well adapted to the purpose for which it is designed.

With the above and numerous other objects in view as will appear as the description proceeds, the invention consists in certain novel features of construction, and in the combination and arrangement of parts as will be hereinafter more fully described and claimed.

In the drawings:

Figure 1 is a side elevation of a bed in tilted position by means of my device, the front portion of the bed being shown partially in section.

Figure 2 is a vertical transverse section taken substantially on the line 2—2 of Figure 1.

Figure 3 is a horizontal section taken substantially on the line 3—3 of Figure 1, and

Figure 4 is a side elevation of the device before the bed is tilted, the bed being shown fragmentarily.

Referring to the drawings in detail it will be seen that the letter B denotes generally a bed including the usual foot 5 and head 6. The foot is provided with the usual cross bar 7. The bed has been described merely for the purpose of exemplifying the utility of my device and of course any other conventional bed adaptable for use with the device may also be utilized.

Referring now to the device itself it will be seen that the same comprises a substantially inverted U-shaped frame comprising a top cross member 8 with depending legs 9 the lower ends of which are curved laterally to the general plane of the frame as indicated at 10 and have journalled on the ends thereof wheels 11. On each leg 9 there is a series of spaced shoulders 12, the upper surfaces of which are notched as indicated at 14.

The utility of the device is almost quite apparent from the drawings as it will be seen the device is engaged under the end of the bed to be lifted by engaging the cross bar 7 or the like in the selected shoulders 12 depending upon the height it is desired to tilt the bed, and then the front end of the frame is swung upwardly and rearwardly until it abuts the bed thereby causing the end of the bed to be lifted to the position shown in Figure 1 and the offset ends 10 of the legs 9 cause the rollers 11 to be sufficiently off center so that the device will stay put in the position shown in Figure 1 without need of any fastening elements.

It is thought that the construction, operation, utility and advantages of this invention will now be quite apparent to those skilled in this art without a more detailed description thereof.

The present embodiment of the invention has been described in considerable detail merely for the purposes of exemplification since in actual practice it attains the features of advantage enumerated as desirable in the statement of the invention and the above description.

It will be apparent that changes in the details of construction, and in the combination and arrangement of parts may be resorted to without departing from the spirit or scope of the invention as hereinafter claimed or sacrificing any of its advantages.

Having thus described our invention, what we claim is:

A device of the class described comprising a substantially inverted U-shaped frame to provide a top cross bar with depending legs, the lower ends of the legs curving outwardly to one side of the general plane of the frame, horizontal trunnions carried by the extremities of the curved parts, wheels mounted on said trunnions and a longitudinally extending row of projections on an intermediate part of each leg, the lower one of which is adjacent the curvature of the leg, said projections being spaced apart and extended in an opposite direction from that of the curved part and each projection having a recess in its upper edge for engaging a bottom cross bar of an end of a bed, whereby when a pair of the projections engage with said cross bar of a bed, the frame will be held against the outer face of the end of the bed with said end in raised position and the curved parts extending outwardly away from the end.

In testimony whereof we affix our signatures.

EDWARD F. DOMKE.
SYLVESTER A. J. ENNIS.