United States Patent [19]

Koch et al.

[11] **3,736,709**

[45] **June 5, 1973**

[54] **BUILDING SYSTEM**

[75] Inventors: **Carl Koch,** Concord; **Joel Leon Lipshutz,** Lexington, both of Mass.

[73] Assignee: **Techcrete, Inc.,** Boston, Mass.

[22] Filed: **July 13, 1971**

[21] Appl. No.: **162,036**

[52] **U.S. Cl.** **52/97,** 52/227, 52/235, 52/236, 52/259

[51] **Int. Cl.** **E04b 1/04**

[58] **Field of Search**.....52/235, 236, 262, 52/250, 251, 97, 227

[56] **References Cited**

UNITED STATES PATENTS

1,924,801	8/1933	Olmsted	52/250
1,981,327	11/1934	Rimmer	52/97
2,091,061	8/1937	Waugh	52/262
3,538,654	11/1970	Gerola	52/97

FOREIGN PATENTS OR APPLICATIONS

764,213	8/1967	Canada	52/97
1,472,185	1/1967	France	52/236

Primary Examiner—John E. Murtagh
Attorney—Willis M. Ertman

[57] **ABSTRACT**

A building system includes a precast bearing wall, a series of precast floor planks resting on the bearing wall and structure above the bearing wall. Precast junction components are disposed in the space between the bearing wall and the structure above and contribute to the sealing of that joint.

8 Claims, 8 Drawing Figures

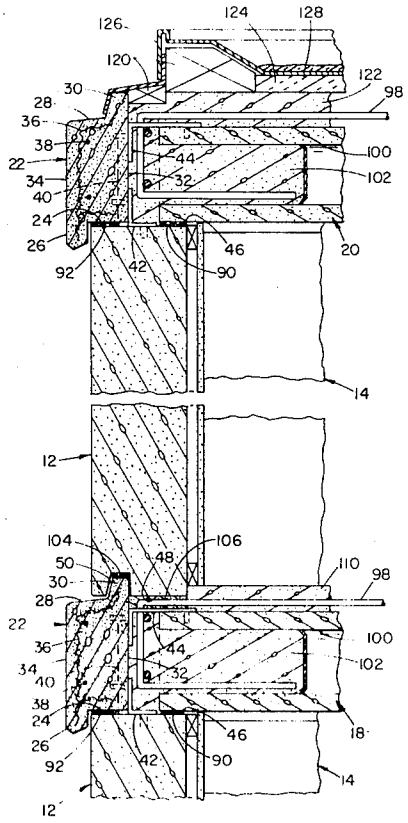

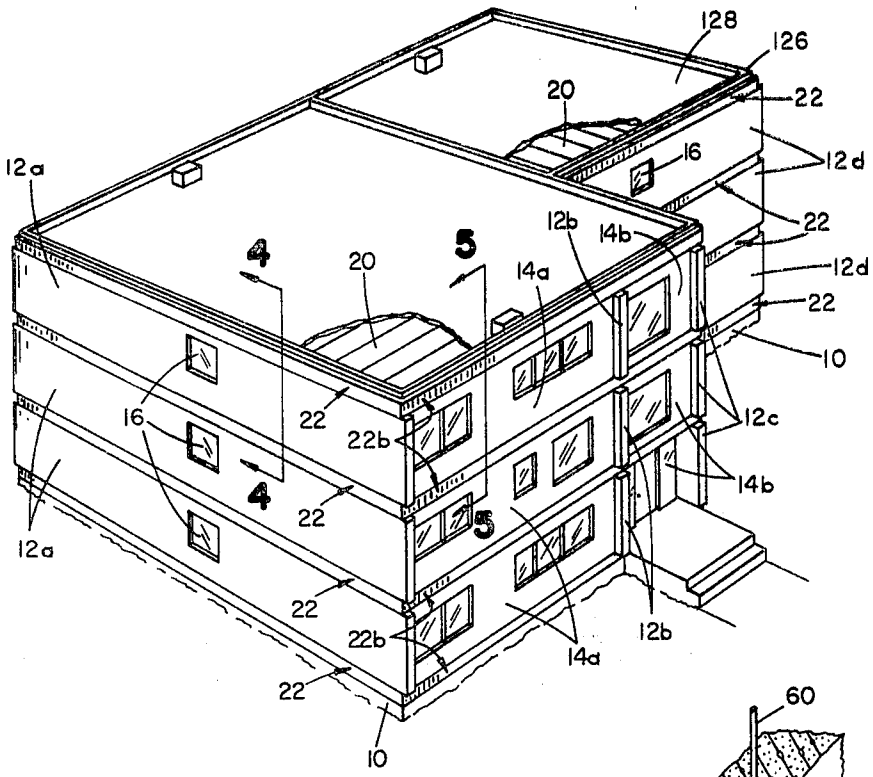

FIG 1

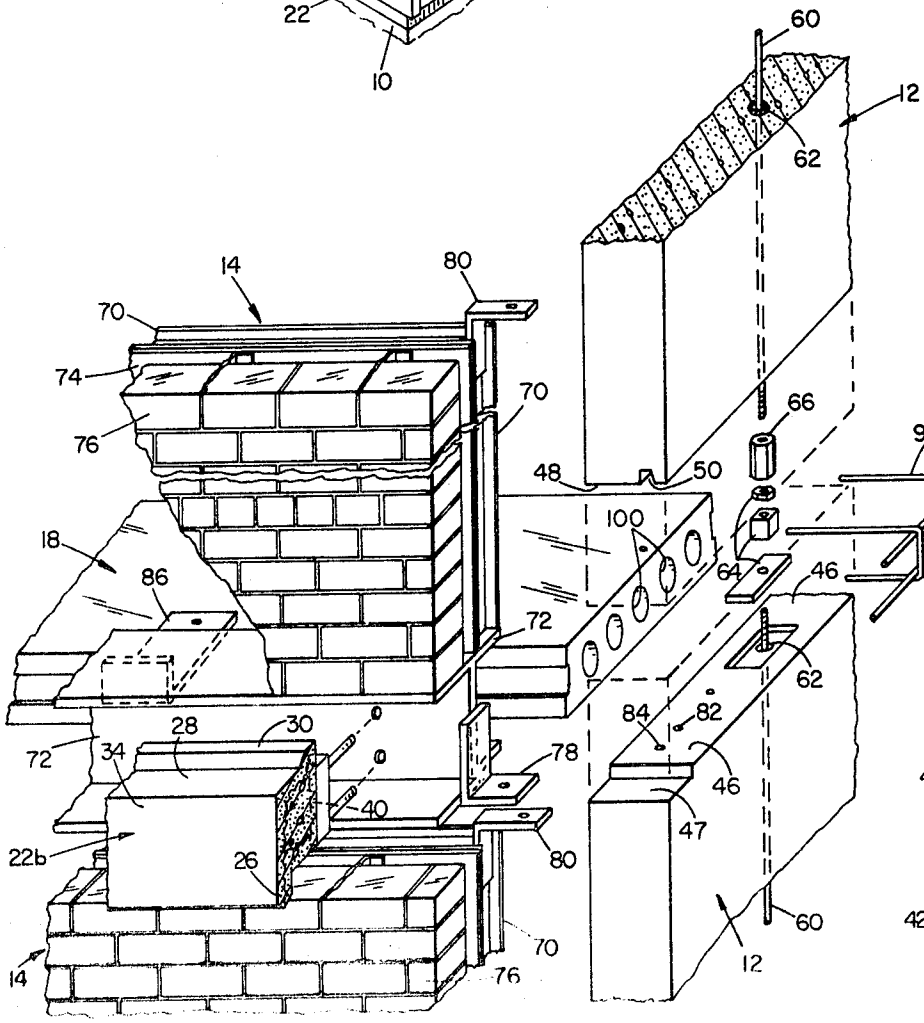

FIG 2

FIG 3

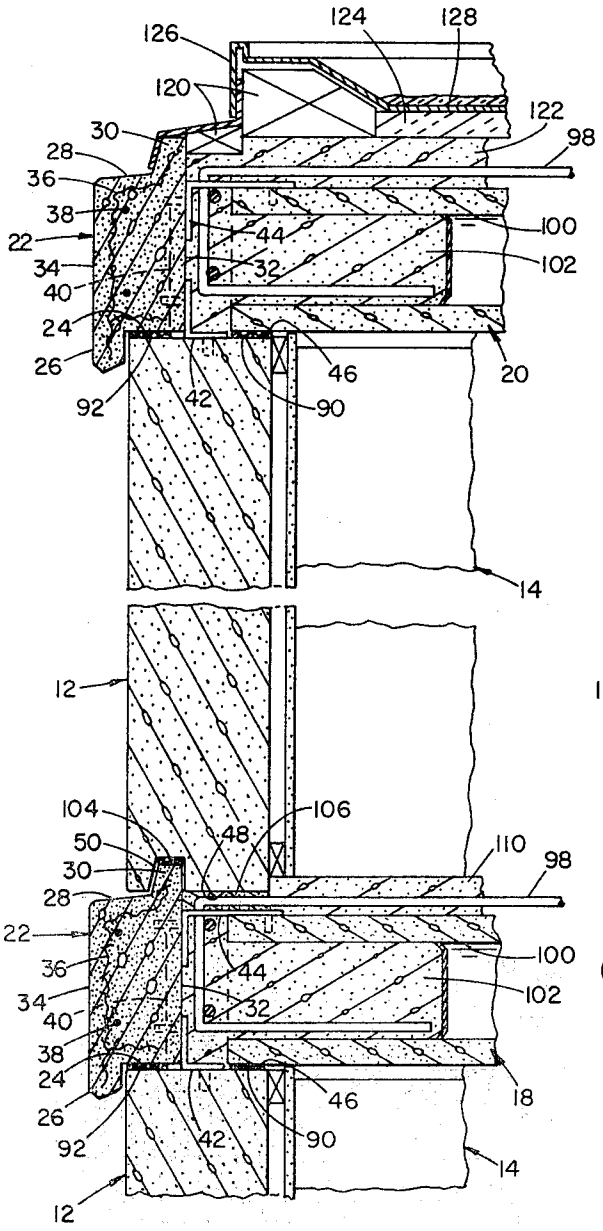
126
124
128
120
122
98
30
28
36
38
22
34
40
24
26
44
32
100
102
92
42
46
90
20
14
12
104
106
50
48
110
98
30
28
22
36
34
40
38
24
26
44
32
100
102
92
42
46
90
18
14
12

FIG 4

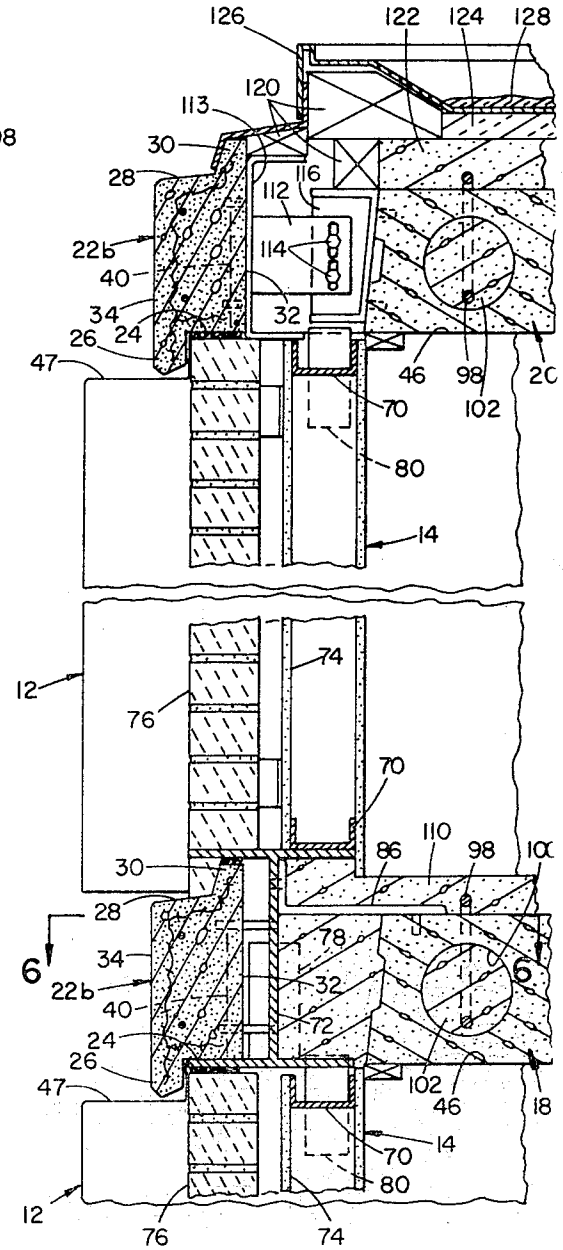
126
122
124
128
120
113
30
28
116
112
114
22b
40
34
26
24
32
47
46
98
102
20
70
80
14
12
74
76
70
110
86
98
100
30
28
6
34
22b
40
24
26
78
32
72
6
102
46
18
47
14
70
80
12
76
74

FIG 5

FIG 6

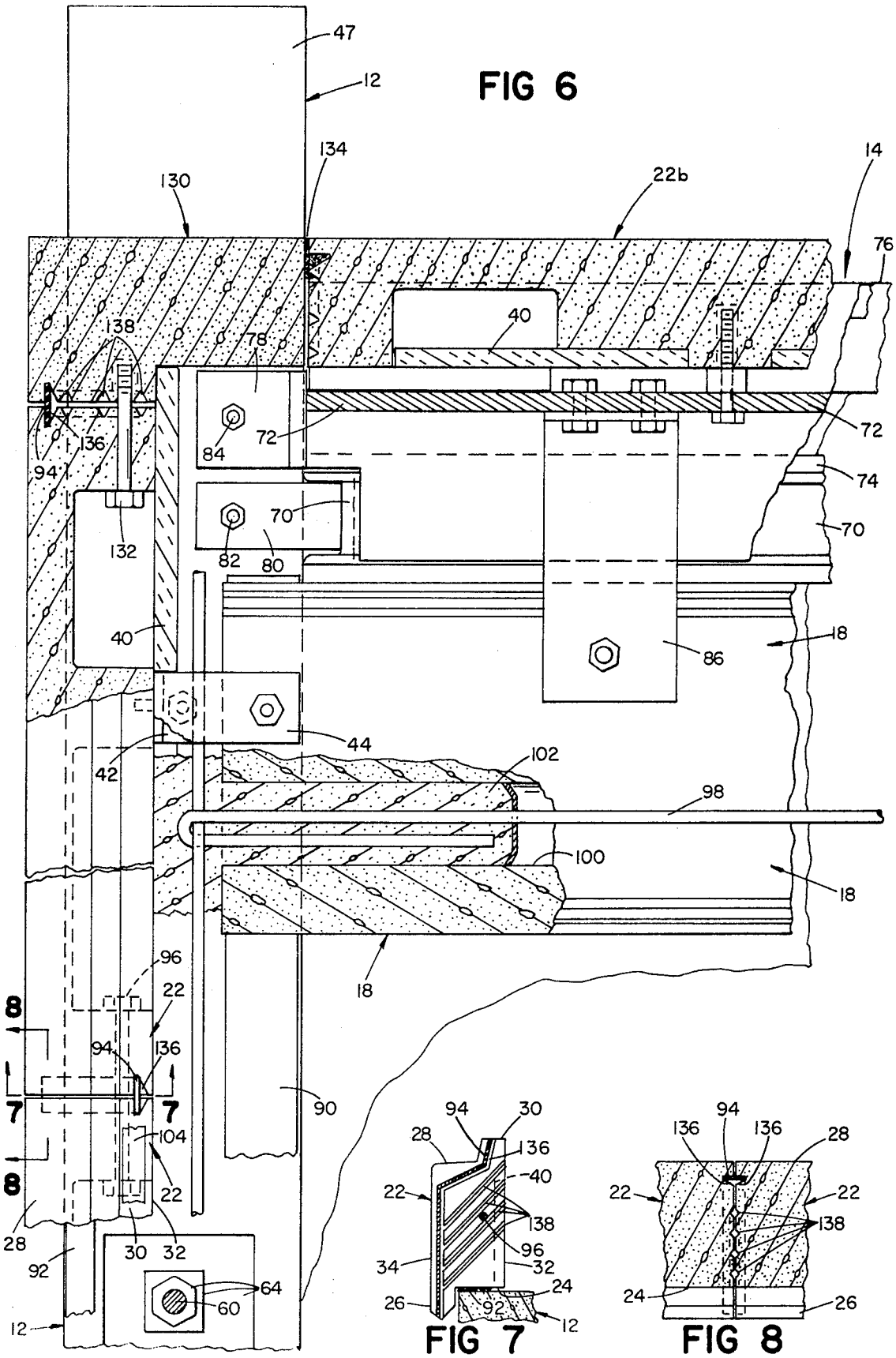

FIG 7

FIG 8

BUILDING SYSTEM

SUMMARY OF INVENTION

This invention relates to buildings and more particularly to a building system that permits flexible design and quality construction at low cost.

There is an acute need for improved building systems, to provide a decent living environment for significant portions of our population. The present urgent housing needs are not being met by conventional construction techniques and it is an object of this invention to provide a novel and improved building system particularly suited to high and medium density urban construction, although the invention is not limited to that type of housing and is adaptable to other building types and housing.

Another object of the invention is to provide a novel and improved building system that incorporates modular components, and provides flexibility in design and in appearance.

Another object of the invention is to provide a novel and improved building system employing standardized factory produced components for fireproof urban housing.

Another object of the invention is to provide a building system that can be fabricated using state of the art techniques and facilities and that is flexible enough to meet complex and varying national design, performance and code requirements.

Another object of the invention is to provide a novel and improved building system utilizing reinforced concrete as a principal structural material.

A building system in accordance with the invention includes standardized concrete bearing wall, prestressed floor and roof plank components. The bearing wall components are disposed in parallel pairs at fixed intervals and provide a one way planning grid perpendicular to the facade which permits a variety of preassembled exterior non-bearing wall configurations to be erected as by crane into the openings between the spaced bearing walls. Interchangeable subsystems may be inserted into the space defined by the bearing and non-bearing (curtain) wall components. Standardization of the structural bearing wall and plank components is facilitated by the use of junction components which are located at each floor level and which provide sealing at that point, facilitate the securing of the floor planks and bearing wall components together, and enable the introduction of aesthetic and structural variety.

In particular embodiments the upper surface of each bearing wall panel is planar and a series of precast floor planks extend between the bearing wall panels and are seated on the upper surfaces of the bearing wall panels with the ends of the plank being spaced inwardly from the outside surface of the bearing wall panels. One or more junction components are seated on the upper surface of each bearing wall panel adjacent to but spaced from the adjacent ends of the floor planks and securing means extend between each junction component and the adjacent bearing wall panel and adjacent ends of the floor planks to secure the assembly together. This securing means preferably is poured concrete, with or without reinforcing depending on the height of the structure and the requisite structural rigidity. The junction component has a depending seal lip that extends downwardly from its lower surface and overlies the upper outer edge of the cooperating bearing wall panel and seal structure on its upper surface that engages the lower surface of the bearing wall panel immediately above. Post-tensioning means extend between the upper and lower bearing wall panels.

Curtain wall structures span the distance between the spaced bearing wall pairs and include structural members at either end that engage the bearing walls. These curtain wall components may be installed at appropriate times, even after the installation of utility subsystem in the building has been completed.

Other objects, features and advantages of the invention will be seen as the following description of a particular embodiment progresses, in conjunction with the drawings, in which:

FIG. **1** is a perspective view of a three-story building constructed in accordance with the invention;

FIG. **2** is a perspective exploded view of components of the building system employed in the structure shown in FIG. **1**;

FIG. **3** is a perspective view of an alternate form of junction component;

FIG. **4** is a sectional view of a portion of bearing wall assembly taken along the line **4—4** of FIG. **1**;

FIG. **5** is a sectional view of a portion of a curtain wall assembly taken along the line **5—5** of FIG. **1**;

FIG. **6** is a horizontal sectional view taken along the line **6—6** of FIG. **5** showing a corner intersection of a bearing wall and a curtain wall; and

FIGS. **7** and **8** are sectional views taken along the lines **7—7** and **8—8**, respectively, of FIG. **6**, showing further details of the junction component structure employed in the building system shown in FIG. **1**.

DESCRIPTION OF PARTICULAR EMBODIMENT

With reference to FIG. **1**, the three-story building there shown is built on foundation **10** and has bearing wall components **12** (**12***a*, **12***b*, **12***c*, **12***d* being shown) and curtain wall components **14** (**14***a*, **14***b* being shown). Floor planks **18** and roof planks **20** extend between bearing walls **12**. The length of the precast bearing wall components **12** is variable, for example, lengths from 20 feet to 50 feet may be used. A clear distance of 32 feet is provided between bearing walls **12***a* and **12***b*, and between **12***d* and its cooperating set of bearing walls at the rear of the building permits flexibility of room arrangement. Bearing wall components **12***b* and **12***c* are closer to each other and entrance, stairway, hallway and other utility structures are located between those components. Extruded, prestressed, precast floor planks **18** and roof planks **20** span the 32 feet between the bearing walls, the precast planks being up to 8 feet (in 1 foot multiples) each in width, 8 inches thick, and 32 feet, 5 inches long. The precast, story high bearing walls **12** have standard openings **16** for doors or windows, leaving the front and back walls of the main structure and the side wall of the wing free to accommodate modular curtain wall structures **14** which include windows, doors, glass walls giving access to balconies, and a variety of architecturally desirable exterior surface features. For example, the curtain wall panel **14***a* may be preassembled with window panels, sliding doors, brickwork, siding or other exterior surface material, and arranged for erection by crane into the openings between the spaced bearing wall components **12***a* and **12***b*. The curtain walls **14***b* are of shorter length and provide a subassembly for the entrances,

stairways and hallways for the building. The wing formed by bearing walls 12*d*, cooperating rear bearing walls and similar curtain wall components 14 at the end.

Junction components 22 at each floor level provide exterior trim, enclose the vertical space between the upper and lower adjacent bearing wall units and secure the floor planks 18 to the bearing wall units. These components are dimensioned and configured as required for each particular building. Similar junction components 22*b* may be used with the curtain wall assemblies 14. Each junction component 22, as indicated in FIG. 2, has a horizontal lower surface 24. A depending lip 26 at the front surface of the component extends downwardly two inches from surface 24 and has a width of 1¾ inches. The upper surface 28 of component 22 is inclined downwardly and outwardly, and at its rear edge is formed a ridge 30 which projects upwardly from that surface with its rear surface in line with the rear surface 32 of the component. The top of the ridge 30 is 10¾ inches above surface 24 in this embodiment and has a width of 1 inch, a height of 2 inches, and an inclined front surface. Component 22 has a width of 5 inches between rear surface 32 and vertical front surface 34. Reinforcing mesh 36 and reinforcing rods 38 provide structural definition for the cast components 22 and rigid insulation 40 is secured in wall 32 to reduce through thermal conductivity at the floor wall joints. Coupling elements 42, 44 extend from rear surface 32 at spaced intervals.

Also as shown in FIG. 2, the upper surface 46 of each bearing wall component 12 is planar with a notch 47 at each end, and its lower surface 48 is similarly planar with the exception that at groove 50 is formed therein which is adapted to mate with ridge 30 of the junction component 22. Groove 50 is 2 inches deep and has a vertical inner wall and inclined outer side wall and a base wall that is 1½ inches in width. The lower surface 48 may be planar and groove 50 omitted when a junction component of the type shown in FIG. 3 is employed—that component 22 having a groove 52 extending along top surface 28; appropriate sealing strips 54, 56 on either side of groove 52 and drain channels 58 from groove 52 to lip 26′. The thickness of the bearing wall components 12 is a function of the height of the building and the location of the particular components in the building. For example, the lower bearing walls typically would be thicker than the upper bearing walls in a high rise building. Post-tensioning rods 60 are received in passages 62 in the bearing walls and are adapted to be tensioned by components 64 and to be connected to further tensioning rods 60 by couplings 66.

An exploded view of portions of curtain wall assemblies 14 is shown in FIG. 2. Each curtain wall structure 14 includes a structural channel frame member 70 to the base of which is secured an I beam 72. An intermediate panel 74 of gypsum and an exterior wall structure 76 of suitable material, brick assembly being shown in FIG. 2, is secured to frame 70. Clip angles 78, 80, respectively, are extended outwardly from either ends of the lower flange of I beams 72 and the upper member of the frame 70, angle 80 of one wall unit 14 being secured to surface 46 at point 82 inwardly of angle 78 of the next higher wall unit that is secured to point 84. The curtain wall unit is preferably preassembled with appropriate fenestration and lifted into place as a unit, permitting efficient and rapid enclosure of the structure. Typically, attached to each curtain wall unit 14 for use in dwelling units are heating facilities together with vertical chases for supply and return piping. Junction components 22*b* that are similar to and match junction components 22 are disposed between the flanges of I beam 72 and are suitably secured to that I beam as by bolting. Bent plate members 86 are also secured to the web of the I beam 72 for attachment to the adjacent floor plank.

Details of the assembly may be seen with reference to FIGS. 4–6. In assembly, two bearing wall components 12 are positioned parallel to one another and rods 60 are suitably post-tensioned. A hard plastic load distributing strip 90 (of polystyrene, for example) is laid on the top surface 46 of each bearing wall component 12 and floor planks 18 are positioned on strips 90 with a 2½ inch overlap with respect to the bearing wall as indicated in FIG. 4. Surfaces 24 of junction components 22 as required (for example, six components, each 6 feet in length on a 38 foot long bearing wall) are positioned on compressible seal gaskets of 92 of suitable material such as neoprene or polyurethane. Seal strips 94 are inserted between the joints as indicated in FIGS. 7–9 and the components are secured together as by bolts 96. Fastening elements 42 and 44 are secured to the adjacent wall member 12 and plank members 18, respectively. Where additional reinforcing is necessary (for example in a high rise building) transverse reinforcing bars and U shaped reinforcing members 98 are positioned as indicated in FIGS. 4–6, one leg of each U shaped member extending into an aperture 100 in plank 18. Three thousand psi grout 102 is then poured into the space defined by the top of wall 12, the end of planks 18 and the inner surface 32 of components 22. This grout flows into the apertures 100 in planks 18 and provides a structurally strong junction between the floor planks 18 and the bearing walls 12.

Further tensioning rods 60 are connected by means of couplings 66 to the lower tensioning rods and additional wall components 12 are positioned on those rods. As indicated in FIG. 4, seal gasket 104 is positioned on the top of ridge 30 to provide a seal and the upper wall component 12 is suitably shimmed at the appropriate height. Dry packing 106 is then forced into the space between the grout 102 and the lower surface 48 of the upper wall component 12 and after that mix has set, rods 60 are post-tensioned so that compression load is transferred by the dry pack 106 through grout 102 from the upper bearing wall component to the lower bearing wall component.

At the roof, roof planks 20 are similarly laid on the top surfaces 46 of the uppermost bearing wall components 12; junction components 22 are secured to the walls and planks 20; reinforcing 98 is provided as required; and the joint is filled with grout 102 as above described. During this construction phase shear walls or other suitable bracing insure the lateral stability of the structure.

The curtain wall units 14 may be installed either during the assembly of the bearing walls and floor planks or after utility subassemblies and appropriate interior units have been positioned within the structure as preferred. Such utility subsystems may include prefabricated plumbing, kitchen or bath units, electrical wiring, heating, etc. A sectional view through portions of curtain wall components is shown in FIG. 5. The indicated

assembly of frame **70**, I beam **72**, exterior structure **76** and coupled components **22*b*** may be moved into position as a unit by a crane. Clip angles **78** at either end of the lower flange of I beam **72** are secured to the upper surface **46** of the adjacent lower bearing wall component **12** and the clip angles **80** at the upper end of frame **70** are secured similarly secured to the upper surface **46** of the next higher (aligned) bearing wall component **12**. The bent plate members **86** are secured to the adjacent floor planks **18** as indicated in FIG. **5**. A two-inch layer **110** of structural topping is then poured on the floor panels to enclosure the upper leg of the reinforcing member **98** where such member is used and to provide a finished surface for the floor planks.

The junction component **22*b*** on the curtain wall at the roof has a clip angle **78'** which is connected to the top of the wall component **12**. Bracket members **112** extend inwardly from spaced bent plate members **113** and are attached by bolts **114** to cooperating bracket members **116** secured to the sides of the outer roof planks **20** to provide a floating joint so that the roof planks **20** may move relative to the curtain walls **14**. Form members **120** are positioned as indicated and a topping **122** is poured. A layer **124** of roofing material is laid on layer **122**; the roof-wall is sealed by flashing members **126**, the flashing extending over ridge **30** of the junction components and then a final layer **128** of roofing material is laid.

Further details of the relation of the bearing walls **12**, curtain walls **14** and the junction components **22** and **22*b*** may be seen with reference to FIG. **6**, which illustrates a corner where a bearing wall and a curtain wall are joined, the structural topping layer **110** being omitted and other portions broken away in graduated fashion. Junction members **22**, as above described, are secured to bearing wall **12** by angle **42**, and to the floor planks **18** by angle **44**. Cooperating junction members **22*b*** are secured to the web of beam **72** by bolts and those wall members are secured to bearing wall members by clip angles **78**, **80** and to planks **18** by plates **86**. A corner junction component **130** connects the end component **22** on the bearing wall **12** to the adjacent end component **22*b*** connected to the curtain wall **14**. Component **130** is secured to the adjacent junction component by bolts **132** and the joint **134** is caulked.

The end surfaces of the components **22**, **22*b*** and **130** are configured as indicated in FIGS. **6–8** and include a relatively deep groove **136** which receives a sealing gasket strip **94** that extends from top surface of ridge **30** down through lip **26**. A series of shallower inclined grooves **138** are disposed behind groove **136** and provide a series of drain channels which communicate with groove **136** to drain moisture downwardly and outwardly through the junction component joint to lip **26**.

Thus it will be seen that the invention provides an inexpensive and flexible building system that provides quality construction for a variety of uses and is particularly useful for medium and high density urban housing. The standard precast bearing walls and precast floor planks are rapidly assembled and the cooperating junction structures define an accessible region which facilitates the provision of structurally strong junctions at those points both in low rise and high rise structures. Thus the invention provides a building system particularly responsive to the present urgent need for low cost housing.

While a particular embodiment of the invention has been shown and described, various modifications thereof will be apparent to those skilled in the art and therefore it is not intended that the invention be limited to the disclosed embodiment or to details thereof and departures may be made therefrom within the spirit and scope of the invention.

What is claimed is:

1. A building system comprising a pair of spaced precast bearing wall panels disposed parallel to one another, a series of precast floor planks extending between said bearing wall panels seated on said upper surfaces of said bearing wall panels with the ends of said planks being spaced inwardly from the outside surface of said bearing wall panels, a plurality of junction components, each said junction component including a body portion having an upper surface including a downwardly inclined outer portion and a lower surface, a depending seal lip extending downwardly from the outer edge of said lower surface, the lower surface of each said junction component being seated on the upper surface of each said bearing wall panel adjacent to but spaced from the adjacent ends of the floor planks with said seal lip overlying the upper outer edge of said bearing wall panel, seal structure on said upper surface of said junction component, and securing means disposed in the space between each said junction component, the adjacent bearing wall panel and the adjacent ends of said floor planks to secure said bearing wall panel and said floor planks together.

2. The system as claimed in claim **1** wherein said junction components are shorter than said bearing wall panels and a plurality of said junction components are disposed in abutting end to end series along each said bearing wall panel, and further including a seal component secured between the adjacent end surfaces of said junction components.

3. The system as claimed in claim **2** wherein the adjacent end surfaces of said junction components each include a groove extending from top to bottom of the component and said seal component is an elongated strip member disposed with its edges in the opposed grooves and extending across the space between said grooves.

4. The system as claimed in claim **3** wherein each said junction component further includes inclined drain channels for conducting condensate downwardly.

5. A building system comprising a pair of spaced precast first bearing wall panels disposed parallel to one another, a series of precast floor planks extending between said bearing wall panels seated on said upper surfaces of said bearing wall panels with the ends of said planks being spaced inwardly from the outside surface of said bearing wall panels, at least one junction component seated on the upper surface of each said first bearing wall panel adjacent to but spaced from the adjacent ends of the floor planks, each said junction component including a depending lip extending downwardly from its lower surface, said lip overlying the upper outer edge of said first bearing wall panel, a pair of second bearing wall panels, each said second bearing wall panel having a lower surface seated in sealing relation to the upper surface of a corresponding junction component, post-tensioning means extending between the first and second bearing wall panels of each pair, and securing means disposed in the space between each said junction component, the adjacent bearing wall

panel and the adjacent ends of said floor planks to secure said bearing wall panel and said floor planks together.

6. The system as claimed in claim 5 and further including a curtain wall extending between each said pair of bearing wall panels, each curtain wall including at each end thereof structure secured to the adjacent bearing wall panel for supporting said curtain wall between said pair of bearing wall panels, a series of precast roof planks extending between the highest pair of bearing wall panels and floating joint structure coupling the outer edge of each outside roof plank to the adjacent curtain wall.

7. The system as claimed in claim 5 wherein each said junction component has projection means extending upwardly from its upper surface and the lower surfaces of said second pair of bearing walls include recesses for receiving said projecting means.

8. The system as claimed in claim 7 wherein said junction components are shorter than said bearing wall panels and a plurality of said junction components are disposed in abutting end to end series along each said bearing wall panel, the adjacent end surfaces of said junction components each include a groove extending from top to bottom of the component, inclined drain channels for conducting condensate downwardly and further including an elongated strip seal member disposed with its edges in the opposed grooves and extending across the space between said grooves.

* * * * *