Oct. 7, 1941. L. C. DOANE 2,258,354

LUMINAIRE

Filed Aug. 3, 1940 2 Sheets-Sheet 1

Fig. 1.

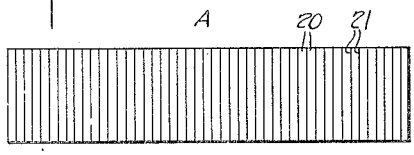

Fig. 2.

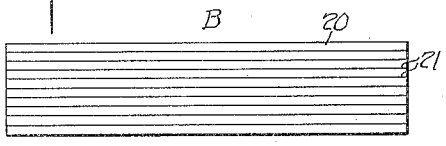

Fig. 3.

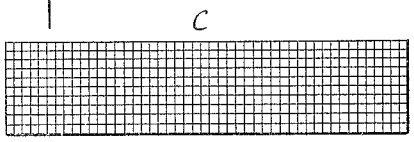

Fig. 4.

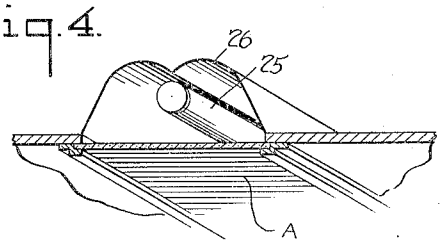

Fig. 5.

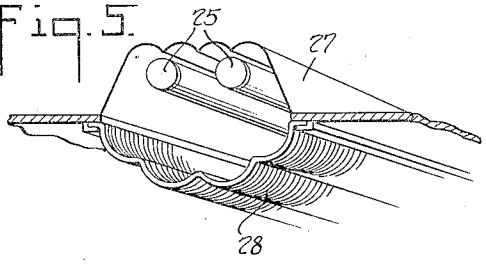

Fig. 6.

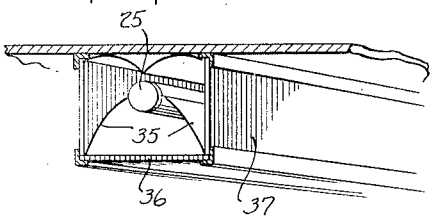

Fig. 8.

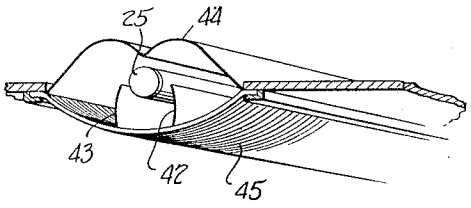

Fig. 7.

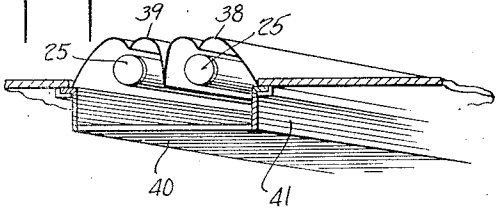

Fig. 9.

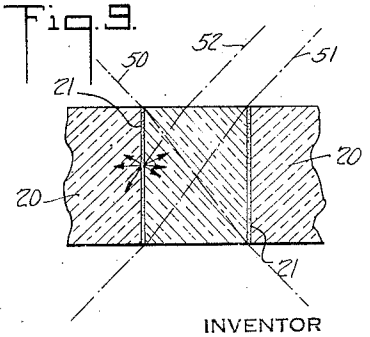

INVENTOR

LEROY C. DOANE

BY

James Liberman

ATTORNEY

Oct. 7, 1941. L. C. DOANE 2,258,354

LUMINAIRE

Filed Aug. 3, 1940 2 Sheets-Sheet 2

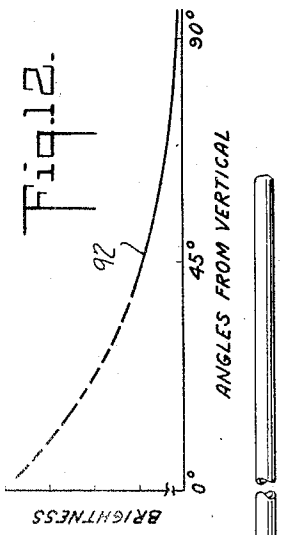

Fig.12.

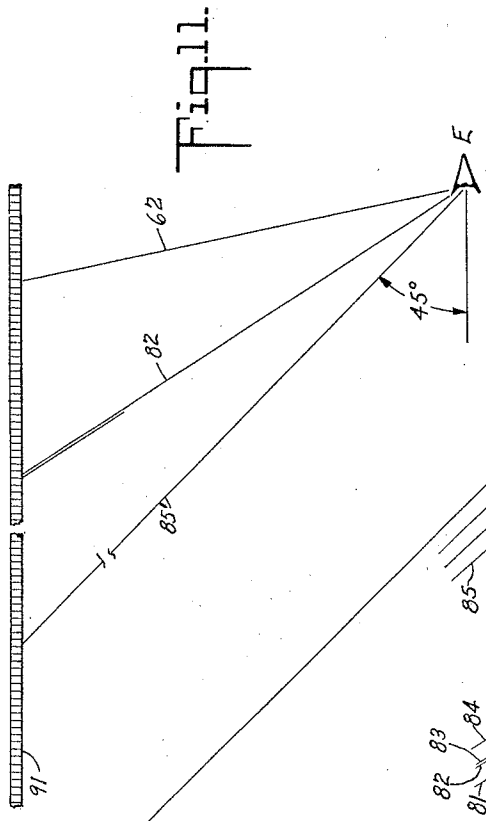

Fig.11.

Fig.10.

INVENTOR
LEROY C. DOANE
BY
Jacob Huberman
ATTORNEY

Patented Oct. 7, 1941 2,258,354

UNITED STATES PATENT OFFICE

2,258,354

LUMINAIRE

Leroy C. Doane, Meriden, Conn., assignor to The Doane Products Corporation, Meriden, Conn., a corporation of Connecticut

Application August 3, 1940, Serial No. 350,731

6 Claims. (Cl. 240—93)

The present invention relates to luminaires, and is more particularly directed toward luminaires having a screen or light shield about the light source and a self-supporting physical closure and window forming element in an aperture formed in the screen or light shield. The present invention also relates to luminaires wherein the screening of the light source at angles where low brightness is desirable may be accomplished without material loss of light in regions where higher brightness is unobjectionable.

According to the present invention the closure and window forming element is in the form of sheet material substantially all of whose area is transparent from face to face for directional transmission of light, the transparent areas being separated by thin transversely extending translucent areas which limit the spread of directly transmitted light.

In constructing luminaires according to the present invention it is contemplated that sections or pieces of sheet material of the type above referred to will be placed opposite the light source and across the aperture in the screen so that the light source may be screened at the desired angles without interfering with the passage of light rays whose divergence is within the screening limits of the sheet material used. By using such physically continuous sheet material for a closure it is possible to make luminaires in which the louver material can form a complete closure.

Where partial concealment of a light source is obtained by a light diffusing and transmitting medium, such as opal glass, enamelled glass, translucent plastic or the like, the light entering the diffusing medium is scattered and reflected in all directions in the medium and transmitted in all directions, but with the maximum intensity normal to the surface, so that a high degree of brightness uniformity may be had, but changing gradually with change of eye position. By selecting the medium and using the required thickness in relation to the source and its disposition, the surface brightness may be suitably controlled, but at sacrifice of control of direction of the transmitted light, loss of efficiency from absorption, and loss of directional control of reflected light.

Where screening of the light source in directions at wide angles from the direction of the dominant, undeviated rays is desired, it has heretofore been customary to employ a construction which utilizes individual screening elements or louvers spaced from one another and of substantial depth. These louvers were generally made of metal, diffusing glass or plastic sheets. They are assembled in the form of rings, egg crates, lattices, etc., and placed so that the dominant rays may escape between the louvers, usually downwardly at steep angles. Louver element spacings in the neighborhood of an inch were, and are, commonly used in this type of lighting equipment. As the overall size of the louver screen was limited, only a few such louver elements would be employed. The use of narrower, more closely spaced elements in these open screens is impractical as there is a large increase in cost and a large loss of light due to the obstruction, as well as deterioration owing to accumulation of dirt. At remote angles the screening would be complete and zero or nearly zero brightnesses may be had. At intermediate angles where the louver elements do not overlap, streaks of direct light escape, and the exposed source may occupy a comparatively wide angle from a point of observation in this intermediate region so that the eye may be subject to the full brightness of the source. Some of the nerve centers of the eye are affected by the excess brightness of the source, and, even though the louver elements have protected other nerve centers, eye strain results. With such widely spaced screening louvers brightness control comparable with that of diffusing mediums as above discussed has not been possible.

Objects of the present invention are therefore to provide luminaires employing sheet louver material of such thickness and louver spacing as will secure brightnesses which may be readily tolerated by the eye of the observer and graded over the surface of the entire screen giving an appearance similar to opal glass, and to accomplish this result with minimum obstruction to the transmission of undeviated light in the desired direction.

The accompanying drawings show, for purposes of illustrating the present invention, several embodiments in which the invention may take form, it being understood that the drawings are illustrative of the invention rather than limiting the same.

In these drawings:

Figure 1 illustrates a sheet of louver material with transverse louvers;

Figure 2 illustrates a sheet of louver material with longitudinal louvers;

Figure 3 illustrates a sheet of material with longitudinal and transverse louvers;

Figures 4 and 5 illustrate recessed luminaires with long light sources, long reflectors and louver material with transverse louvers;

Figures 6 and 7 illustrate luminaires with long light sources, longitudinally extending reflectors

and louver material part of which is longitudinal and part of which is transverse of the light source;

Figure 8 illustrates a further modification of luminaire with reflector, long light source and louver material;

Figures 9 and 10 are diagrammatic views at greatly enlarged scales illustrating the action of the louver material in transmitting the direct light;

Figure 11 is a diagrammatic view illustrating the viewing of the luminaire; and

Figure 12 illustrates the curve of brightness of a horizontal screen plotted against angles of observation measured from the vertical.

The louver material A and B shown in Figures 1 and 2, respectively, consists of alternate transparent and translucent lamina suitably secured together to form a sheet. The transparent lamina **20** are wider than the translucent lamina **21** and are preferably of a width of one-half to two-thirds of the thickness of the sheet. This sheet material may be made up by assembling alternate layers of clear transparent plastic and thin sheets of translucent plastic, molding them together to form a unitary mass, and then shearing the mass transversely to provide sheets of material in which the transparent and translucent areas extend from face to face. The sheet may be polished to secure a smooth surface or may have scoring in the form of prisms or flutes as shown in my pending application Serial No. 283,344, filed July 8, 1939.

The egg crate screen C of Figure 3 may be made by subjecting sheets of louver material, such as shown in Figures 1 and 2, with alternate thin sheets of translucent material to molding and shearing operations similar to those above described. Instead of making the louver material as above described it may be made according to the disclosure of my pending application Serial No. 250,979, filed January 14, 1939.

The louver material has a high transmission of light through the transparent areas. The translucent areas act as diffuse reflectors for oblique light falling on their surfaces and act as screens limiting the divergence of light rays which can be directly transmitted through the transparent areas. This material has sufficient strength to be self-supporting and is able to form a physical closure over an opening whereby passage of dust and dirt is prevented and air circulation may be controlled.

The luminaire illustrated in Figure 4 has a long light source **25**, such as a fluorescent lamp, an enclosure **26** including a light reflecting surface of suitable form, and a closure comprising a sheet of louver material A with transversely extending louvers.

The arrangement in Figure 5 is similar to that of Figure 4, except that two long light sources are employed, a different shaped reflector **27** being used, and the louver material **28** is corrugated to provide an ornamental contour.

In the arrangement shown in Figure 6 the light source **25** is arranged adjacent the reflector **35** adapted to direct light down through a screen **36** with longitudinally extending louvers while the upwardly directed light from the source **25** is directed out through a vertical screen **37** with vertically extending louvers.

The arrangement shown in Figure 7 has two longitudinally extending light sources **25**, two reflector systems **38**, **39**, and screen material **40** and **41** arranged similarly to those of Figure 6.

In Figure 8 the light source **25** is arranged adjacent reflectors **42** and **43** adapted to concentrate light downwardly and a larger longitudinally extending reflector **44** back of the light source spreads the other rays outwardly. All the light is transmitted through a screen **45** of transversely louvered material.

While the above showings are largely diagrammatic it will be understood that it is intended to indicate the large variety of luminaires in which the present screening material may be advantageously used. It is suitable for use opposite any opening in a light enclosure for the purpose of closing the opening and controlling the direction of light through that opening. The light enclosure may be a reflector acting to direct light through the louver material or to direct light away from the louver material, or it may be another piece of similar material.

Figure 9 illustrates at an enlarged scale a cross section through a screen, the clear strata being indicated at **20**, and the light-modifying strata at **21** as before. Light rays emitted between the rays **50** and **51** will pass through a clear strata without deviation and with minimum absorption. Other light rays, such as **52**, will be intercepted by the light-modifying material **21**, and will be reflected or transmitted depending upon the reflecting and transmitting properties of the coating material employed, and its color, so that the light affected by the coating material and ultimately transmitted will have a definite color value. Ordinarily the color will be white, so that the appearance of the screens resembles opal glass. It is possible to provide screens which have no noticeable effect on the color of the dominant light transmitted by the screen, but they may have an entirely different color appearance when viewed at angles where there is little or no dirctly transmitted light.

In Figure 10 a cross section of a length of louver material appears extending laterally from a point directly under a light source X. A bundle of rays normal to the surface of the screen, such as the ray indicated at **60**, will pass through the transparent area without deviation and without loss of intensity, except for the absorption of the transparent material. There will be a minimum loss resulting from obstruction by the translucent area as it presents such a narrow width—of the order of .003 inch.

A bundle of rays, such as those indicated at **61**, **62**, **63** and **64**, will fall at a comparatively steep angle as indicated. The rays between **61** and **62** and between **63** and **64** will be intercepted by the translucent areas **21** and the rays between **62** and **63** transmitted. For each region, such as that indicated at L, receiving unintercepted rays the source will be visible and high brightness possible, and for each adjacent region, indicated at D, and receiving diffused light only, and therefore dim, the brightness will be low.

Further from the normal a bundle of rays, such as **71**, **72**, **73** and **74**, will produce alternating regions of high brightness L′ and low brightness D′ in which the width of the low brightness regions increases. Where the rays slope more, as indicated at **81**, **82**, **83** and **84**, the high brightness region L″ has almost disappeared and the low brightness regions D″ predominate. Farther out beyond ray **85** the direct light has been obliterated and diffused rays **85′**, **85″** are transmitted. This ray **85** is drawn at 45° to the horizontal, the angle usually considered as the upper limit of the glare zone.

Should the light source be elongated in the direction of the dash line through X of Figure 10, rays from any point on it will be handled by the screen in the same manner measuring from the normal to the screen surface.

In Figure 11 a long light source is indicated at 90, the louver screen at 91 and the eye of the observer at E, the spacings not being to scale. Rays entering the eye at angles below 45° above the horizontal are in the glare zone, but, as shown in Figure 10, these rays will come from areas on the screen from which no direct light escapes at such angles. Hence all light coming from points to the left of ray 85' of Figure 11 will be diffused. The regions L'', L' and L of higher brightness above the 45° line would be in the line of sight, if one looked up above the horizontal at sufficiently steep angles and, if these were of substantial width, would cause an annoying glare.

The louver screens contemplated by the present invention have very close louver spacings, a typical spacing being about 25 per inch with the translucent areas about .003 inch wide and the clear areas about .040 inch wide. The thickness of the plate will depend upon the angle at which cut off of direct light is desired, this thickness, allowing for the index of refraction, is about one and a half times the spacing of the translucent areas. As a result the points of brightness caused by direct light passing obliquely through the screen at the wider angles are very small and spaced very close together when viewed from the lower side of the screen. At distances of from four to six feet the eye is unable to discriminate between the bright and dark regions of the screen and instead of obtaining two responses, one for the bright spot and one for the adjacent darker spot, there is a single response from a single nerve cell of the intermediate brightness. The inability of the eye to discriminate is arrived at when the angular spacing of the objects viewed is less than about one minute of arc. The effect caused with the screen of closely spaced louvers is similar to that produced by a picture made by a fine line screen where the eye does not see the dots but gets gradations of brightness.

The louvered material, when viewed at such distances and angles where direct light will not be transmitted to a substantial extent, will therefore have a gradation of brightness with no annoying regions of excessive brightness, and will resemble in its brightness characteristics opal glass and the like. This is illustrated by the chart of Figure 12 where the curve 92 shows how the brightness falls off with increase of angle of view above the horizontal. At the left the curve is made discontinuous as here the brightnesses would be irregular.

The present application is a continuation in part of my pending application Serial No. 283,343, filed July 8, 1939.

It is obvious that the invention may be embodied in many forms and constructions within the scope of the claims and I wish it to be understood that the particular forms shown are but a few of the many forms. Various modifications and changes being possible, I do not otherwise limit myself in any way with respect thereto.

What is claimed is:

1. In a luminaire, the combination with a linear light source and an apertured light enclosure about the light source, of a closure and window forming element for said aperture, all substantially of the same length, said element being constituted in a sheet of material having substantial thickness and substantially all of its area transparent from face to face for directional transmission of light, said sheet being divided into a plurality of transparent portions by relatively thin transversely extending translucent portions which function as louvers to limit the spread of directly transmitted light and to transmit diffused light so as to have a perceptible brightness when viewed at angles beyond the cutoff limit of directly transmitted light in planes including the axis of the light source.

2. A luminaire such as claimed in claim 1, wherein the transparent portions are substantially colorless so that the color of the transmitted light is unaffected thereby, the translucent portions being colored so that the sheet appears colored when viewed at slanting angles.

3. A luminaire such as claimed in claim 1, wherein the entire sheet is composed of a plastic material and the translucent portions are formed by non-transparent media suspended therein.

4. A luminaire such as claimed in claim 1, wherein the light enclosure is in the form of an elongated reflector parallel with the source for controlling the divergence of light reflected onto the closure.

5. A direct lighting luminaire mounted a substantial distance above eye level so as to be viewable in the glare producing zone of approximately 45° or less above the horizontal and at distances of substantially six feet or more, said luminaire comprising a linear light source, and a louver screen below the light source, said screen being in the form of a sheet of material substantially all of which is transparent from face to face for directional transmission of light, said sheet being divided into transparent portions by thin transversely extending translucent portions which limit the spread of directly transmitted light in a direction axially of the light source, the spacing of said translucent portions being such as to occupy an arc measured from the eye position less than the discriminating power of the eye so that a uniform average of light and dark areas is registered by the eye.

6. The combination with a linear light source having a brightness in excess of that which the eye can tolerate without fatigue, of a louver screen composed of a sheet of material substantially all of which is transparent from face to face for directional transmission of light, said sheet being divided into transparent portions by thin transversely extending translucent portions which limit the spread of directly transmitted light in a direction axially of the light source, the spacing of said translucent portions being sufficiently close to reduce the angular width of the outermost regions which transmit any direct light to be below that width which the eye can see at a distance of substantially six feet whereby a gradation of brightness is produced through a wide range of angles of observation without a sharp transition point, said prisms on one face of said sheet acting to diffuse light laterally of said light source uniformly with respect to the axial diffusion of light by said transparent portions, the spacing of said prisms being less than that of said translucent portions.

LEROY C. DOANE.