July 1, 1941. Q. I. WAGNER 2,247,896

HEATING SYSTEM

Filed June 5, 1940 3 Sheets-Sheet 1

Fig. 1.

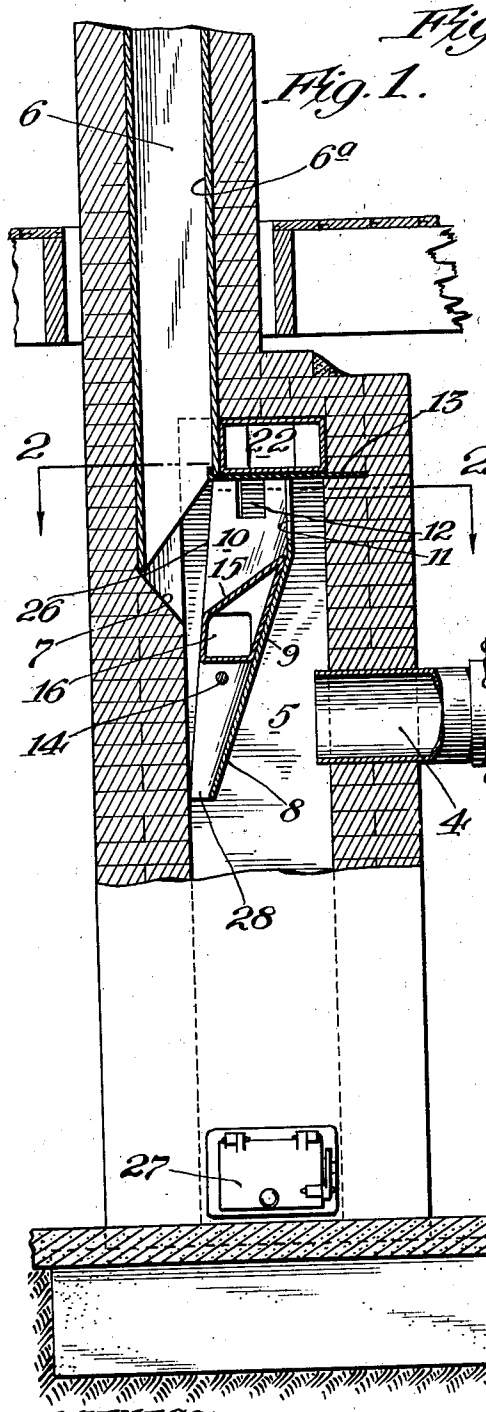

Fig. 2.

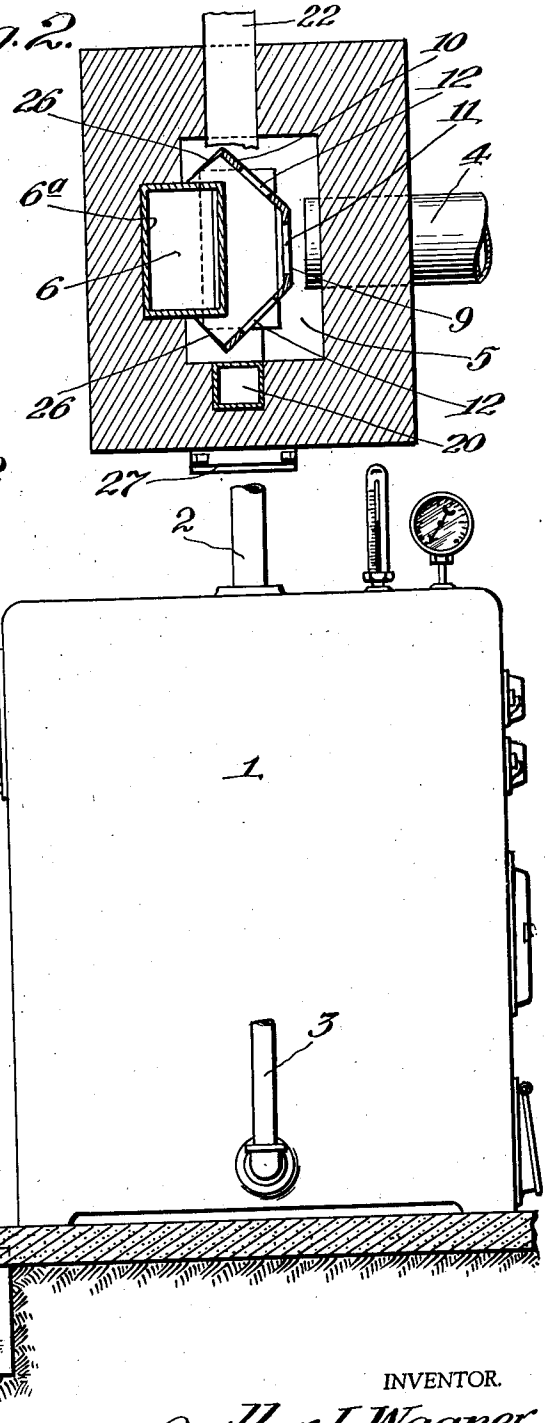

WITNESS:
Paul J. Gathmann

INVENTOR.
BY Quilbar I. Wagner.
ATTORNEYS:

July 1, 1941. Q. I. WAGNER 2,247,896

HEATING SYSTEM

Filed June 5, 1940 3 Sheets-Sheet 2

Fig. 3.

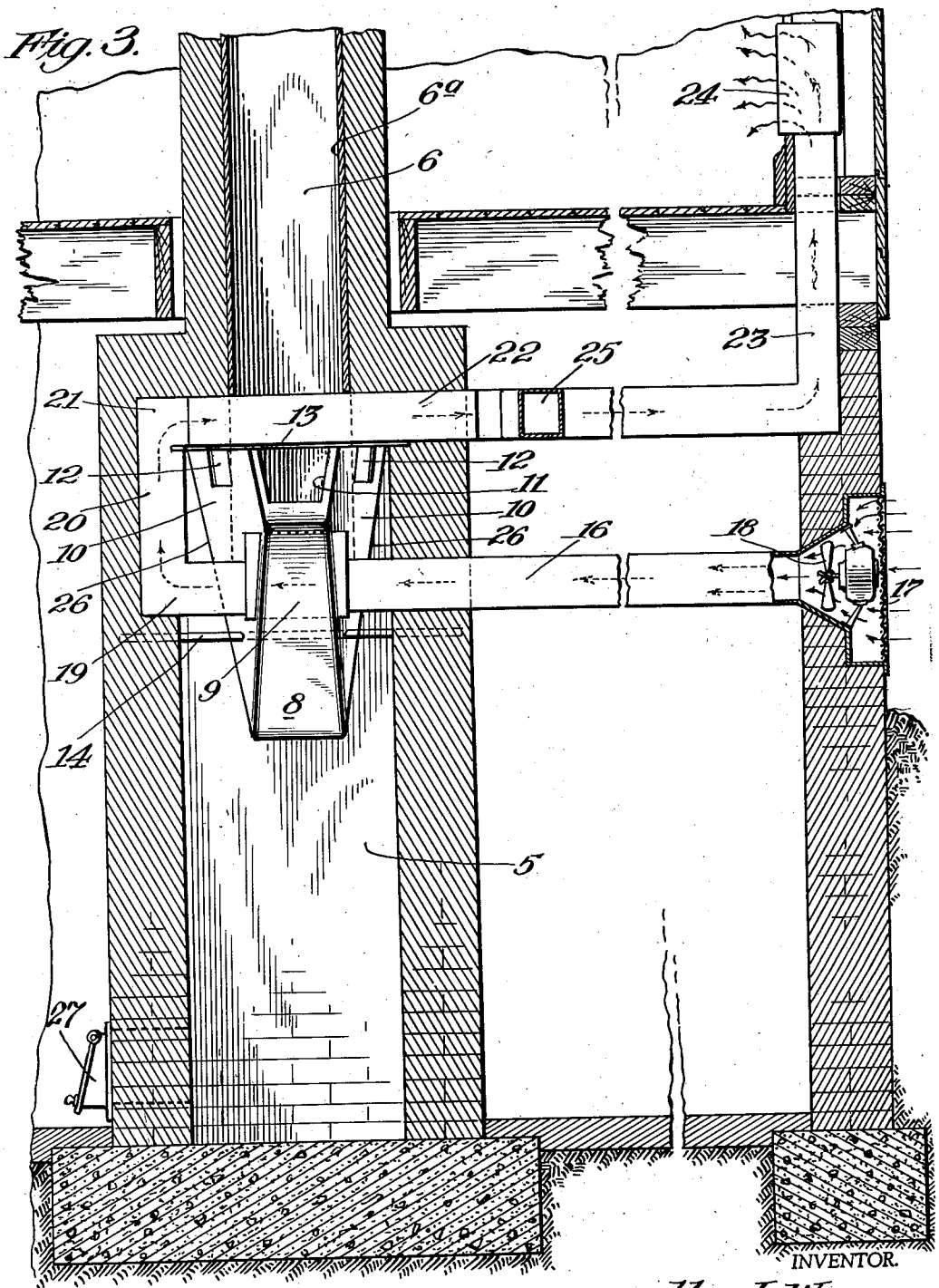

INVENTOR.

WITNESS:
Paul J. Gathmann

BY Quiffar I. Wagner.
Burton & Burton
ATTORNEYS:

July 1, 1941. Q. I. WAGNER 2,247,896

HEATING SYSTEM

Filed June 5, 1940 3 Sheets-Sheet 3

Fig. 4.

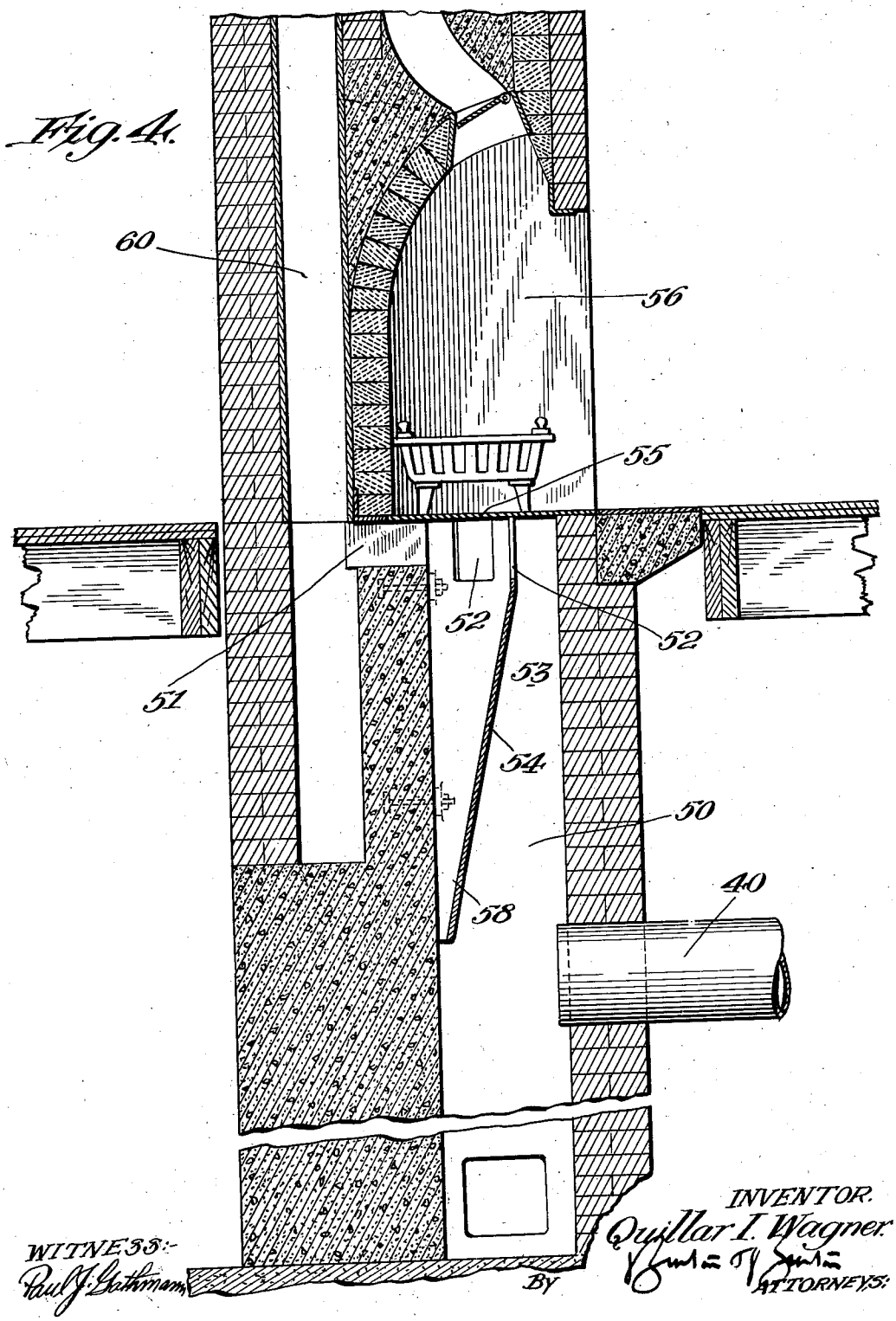

WITNESS:
Paul J. Gathmann

INVENTOR.
Quillar I. Wagner.
BY
ATTORNEYS.

Patented July 1, 1941

2,247,896

UNITED STATES PATENT OFFICE

2,247,896

HEATING SYSTEM

Quillar I. Wagner, Villa Park, Ill.

Application June 5, 1940, Serial No. 338,983

11 Claims. (Cl. 237—50)

This invention relates to improvements in heating systems and is illustrated as applied to a residential type of heating plant, though the principles embodied herein are not limited to such application.

One object of the invention is to utilize much of the heat which ordinarily escapes in the flue gases by way of the chimney.

Another object of the invention is to improve combustion in the furnace itself.

And a further object is to provide means for supplying a quantity of fresh air to the heated apartment at a comfortable temperature.

Other objects and advantages will appear from the following description. The invention consists in certain features and elements of construction in combination, as herein shown and described and as indicated by the claims.

In the drawings:

Figure 1 shows a furnace in side elevation and a chimney therefor in vertical section, together with a baffle device embodying this invention installed in the chimney.

Figure 2 is a transverse section taken substantially as indicated at line 2—2 on Figure 1.

Figure 3 is a vertical sectional view taken through the chimney substantially as indicated at line 3—3 on Figure 2, and showing in elevation the fresh air conduit employed in association with the baffle device of this invention.

Figure 4 is a vertical sectional view of a chimney with a fireplace associated therewith and including a baffle device embodying this invention.

The furnace shown at 1 may be understood as of a conventional type of heating plant employing either coal, oil or gas fuel, and operating a heating system in which either steam, hot water or hot air is employed as the primary heat-transferring medium, although, as illustrated, the furnace is shown with fragmentary sections of piping at 2 and 3 which may represent connections to a steam or hot water system. The furnace includes an outlet or smoke pipe 4 for the escape of smoke and other products of combustion, and this pipe is shown opening into the lower section 5 of a chimney flue. The upper section 6 of the chimney flue is offset out of alignment with the lower section and is shown equipped with a metallic liner 6a which extends downward to an inclined shoulder 7 formed in the brick-work of the chimney, and sloping downwardly into connection with the lower flue section 5. The upper portion of the lower section 5 is partially occupied by a hollow metallic baffle member 8 which includes an upwardly inclined middle section 9 with lateral wing sections 10, 10. This structure fills up an appreciable portion of the lower flue section 5, and by virtue of its upwardly sloping form causes the effective cross-section of the flue to taper upwardly to outlet ports 11 and 12, formed respectively in the front wall 9, and wings 10 of the baffle. These ports afford communication with the lower end of the upper flue section 6, and in conjunction with a horizontal metallic plate 13 they form a short horizontal passage connecting the lower section 5 with the upper section 6. The plate 13 is set into the masonry of the chimney structure, and the baffle 9 may be suspended from said plate 13, although, if desired, auxiliary support, such as a transverse rod 14, may be provided for the baffle.

As shown in Figure 1, the upwardly inclined portion 9 of the baffle is disposed directly opposite the smoke pipe 4 so that products of combustion strike the baffle as they emerge from the furnace and are then conducted upwardly through the gradually restricted passage. This permits a very considerable quantity of heat to be absorbed by the metallic baffle and also by the plate 13 at the top of the lower flue section 5. Within the hollow space enclosed by the three walls of the baffle 8 there is mounted a closed chamber 15 into one side of which there is connected an air supply conduit 16 leading from a source of supply of fresh air, such as a grille 17 in the outer wall of the building, which may be fitted, if desired, with a circulating fan 18, as shown. At the other side of the chamber 15 there is connected a continuation of the conduit 16, including an elbow 19, an upwardly trending section 20, a second elbow 21 and a horizontal section 22 which extends directly over and in contact with the plate 13. From this point the conduit is shown leading upwardly at 23 to an outlet 24 in a room or apartment above that in which the heating plant is located. A branch connection is also indicated at 25. It may be understood that the fresh air entering at 17 will absorb a quantity of heat as it passes through the chamber 15, and will absorb a further quantity of heat by conduction from the plate 13, and will then be delivered to various rooms or spaces in the building at a comfortable temperature, so that it not only provides for conditioning the air supply by a constant addition of fesh air from out-of-doors, but also supplements the other heat-transmitting medium, whether steam, hot water or hot air.

The lower end af the baffle structure 8 includes an opening 28 discharging downwardly into the flue section 5. This allows the soot and cinders from the flue 6 to fall to the bottom of the flue 5 where they will accumulate and will be removed periodically through the usual clean-out door 27.

In addition to conducting upwardly the smoke and other products of combustion, the chimney flue normally admits a downward flow of air which supplies oxygen, supplementing the air taken in at the front of the furnace to support combustion therein. This downward flow of air from the flue section 6 into the lower section 5 and smoke pipe 4, is not prevented by the presence of the baffle structure 8, because the edges 26 of the lateral wing portions 10 do not extend into contact with the walls of the flue section 5, except at the extreme lower end of the baffle, and at this point the outlet 28 permits the downward flow of air to pass.

Figure 4 shows a modified structure in which the lower flue section 59 and the upper flue section 60 are connected by a horizontal passage 61 having communication with the section 59 through ports 62 in the upper portion of a metallic baffle structure 63. This includes an upwardly sloping front wall 64 which constricts the effective cross-section of the lower flue section 59 so that it tapers upwardly, confining the hot gases from the smoke pipe 49 and forcing them to pass in contact with a horizontal plate 65 which forms the top of the section 59 and is disposed just above the ports 62.

This top plate 65 also serves as the floor or bottom of a fireplace 66, opening into a room or apartment on the floor above that in which the heating plant is located. Thus heat from the flue gases passing through ports 62 and passage 61 is absorbed by the plate 65 and radiated directly therefrom into the adjacent air. The lower end of the baffle structure 63 is open at 68 to provide for the downward passage of fresh air for supplying oxygen to the fire from the chimney flue 60; and the sides or wing portions extending from the sloping front wall 64 may be provided with lugs 67 to engage fastening bolts 69 by which the baffle is secured to the wall of the flue section 59. The upper end of the baffle may be welded or otherwise attached to the plate 65 for additional support.

Thus it will be evident that the provision of heat-absorbing baffle in accordance with my invention renders available a very considerable quantity of heat which would otherwise escape up the chimney, while at the same time the furnace is assured of an adequate supply of oxygen from the chimney because the presence of a baffle separates the upwardly and downwardly flowing gases and facilitates their movement. While there is shown and described herein certain specific structure embodying the invention, it will be manifest to those skilled in the art that various modifications and rearrangements of the parts may be made without departing from the spirit and scope of the invention, and that the same is not limited to the particular form herein shown and described, except in so far as indicated by the appended claims.

I claim:

1. In combination, a furnace, a chimney flue comprising a lower section and an upper section offset therefrom, a smoke pipe from the furnace opening into the lower flue section, and a baffle member in said lower section sloping upwardly therein and forming an upwardly narrowing passage leading from the smoke pipe with a port at the upper end of said passage affording communication in horizontal direction with the upper flue section, together with a horizontal member of heat-conducting material immediately above said port and forming a wall of a horizontal passage connecting the lower section with the upper section of the flue, and air space means adjacent said horizontal passage and into which heat is radiated by said member.

2. In combination, a furnace, a chimney flue comprising a lower section and an upper section offset therefrom, a smoke pipe from the furnace opening into the lower flue section and a baffle member in said lower section sloping upwardly therefrom and forming an upwardly narrowing passage leading from the smoke pipe with a port at the upper end of said passage affording communication with the upper flue section, said baffle providing a space at the opposite side of the lower flue section from the portion in which the upwardly narrowing passage is formed, said space communicating with the upper flue section and having an outlet at the lower end of the baffle discharging into the lower flue section.

3. In combination, a furnace, a chimney flue comprising a lower section and an upper section offset therefrom, a smoke pipe from the furnace opening into the lower flue section, and a baffle member in said lower section sloping upwardly therein and forming an upwardly narrowing passage leading from the smoke pipe with a port at the upper end of said passage affording communication with the upper flue section, said baffle providing a space at the side of the lower flue section opposite that which contains the upwardly narrowing passage, said space communicating with the upper flue section and having communication with portions of the lower flue section through which air may flow downwardly without interfering with the upwardly moving gases flowing from the smoke pipe.

4. In combination, a furnace, a chimney flue comprising a lower section and an upper section offset therefrom, a smoke pipe from the furnace opening into the lower flue sections, and a baffle member in said lower section disposed directly opposite the smoke pipe opening and sloping upwardly therein and forming an upwardly narrowing passage leading from the smoke pipe with a port at the upper end of said passage affording communication horizontally with the upper flue section, a chamber disposed in contact with said baffle at the side opposite that which confronts the smoke pipe opening, together with an air conduit comprising an inlet pipe leading into said chamber at one side and an outlet pipe extending from said chamber for conveying air through the chamber and permitting it to absorb heat from the baffle.

5. In combination, a furnace, a chimney flue comprising a lower section and an upper section offset therefrom, a smoke pipe from the furnace opening into the lower flue section, and a baffle member in said lower section disposed directly opposite the smoke pipe opening and sloping upwardly therein and forming an upwardly narrowing passage leading from the smoke pipe with a port at the upper end of said passage affording communication horizontally with the upper flue section, together with a

horizontal member of heat-conducting material immediately above said port and forming the upper end of said upwardly narrowing passage, a wall of a passage connecting the lower section with the upper section of the flue, and an air conduit comprising an inlet passage extending substantially in contact with the baffle and thence conducting a confined quantity of air substantially in contact with said horizontal heat-conducting member and to a point of discharge in an apartment to be heated whereby said air can absorb heat from the flue gases by way of said baffle and said horizontal member.

6. In combination, a furnace, a chimney flue comprising a lower section and an upper section offset therefrom, a smoke pipe from the furnace opening into the lower flue section, and a baffle member in said lower section comprising an inclined wall portion sloping upwardly in the middle portion of the flue section with wing portions adjoining said wall and flaring toward the face of the flue back of the baffle, said inclined portion forming in the flue an upwardly narrowing passage leading from the smoke pipe, the baffle having ports at its upper end affording communication with the upper flue section, the narrowed portion of the lower section terminating adjacent said ports thus forcing the flue gases to travel horizontally from one section to the other.

7. In combination, a furnace, a chimney flue comprising a lower section and an upper section offset therefrom, a smoke pipe from the furnace opening into the lower flue section, and a baffle member in said lower section comprising an inclined portion sloping upwardly in the middle portion of the flue section with wing portions adjoining said wall and flaring toward the face of the flue back of the baffle, said inclined portion forming in the flue an upwardly narrowing passage leading from the smoke pipe, the baffle having ports at its upper end affording communication with the upper flue section, the narrowed portion of the lower section terminating adjacent said ports thus forcing the flue gases to travel horizontally from one section to the other, together with a chamber built into said baffle between the wing portions on the opposite side of the baffle from that which confronts the smoke pipe opening, and an inlet passage and an outlet passage for conducting air through said chamber to absorb heat from the flue gases through said baffle.

8. In combination, a furnace, a chimney flue, a smoke pipe from the furnace opening into the flue, and a baffle member positioned in the flue adjacent the smoke pipe opening and sloping upwardly to form an upwardly narrowing passage with a port at the upper end of said passage affording communication with the upper portion of the flue, said baffle forming also a second passage leading from the upper portion of the flue and having an outlet at the lower end of the baffle.

9. In combination, a furnace, a chimney flue comprising a lower section and an upper section offset therefrom, a smoke pipe from the furnace opening into the lower flue section, an open fireplace disposed directly above the lower flue section with a metallic plate forming the top of said section and the floor of said fireplace, and a baffle member in said lower section sloping upwardly therein and forming an upwardly narrowing passage terminating at said metallic plate, said baffle having a port adjacent said plate and affording communication with the upper flue section whereby the flue gases traveling adjacent said plate in passing from the lower flue section to the upper flue section give up heat to the plate for radiation into the apartment with which the fireplace is associated.

10. In the combination defined in claim 9, the lower end of said baffle being spaced away from the wall of the flue to afford a downwardly discharging outlet for air flowing downwardly through the chimney to the furnace.

11. In combination, a furnace, a chimney flue comprising a lower section and an upper section offset therefrom, a smoke pipe from the furnace opening into the lower flue section, and a baffle member in said lower section comprising an inclined portion sloping upwardly in the middle portion of the flue section with wing portions adjoining said inclined portion and extending toward the face of the flue back of the baffle, said inclined portion forming in the flue an upwardly narrowing passage leading from the smoke pipe, the baffle providing adjacent its upper end an opening which affords communication in horizontal direction between the lower flue section and the upper flue section, the upwardly narrowing passage of the lower section terminating adjacent said opening whereby the flue gases are forced to travel horizontally from one section to the other.

QUILLAR I. WAGNER.