Oct. 15, 1929. A. McNAB 1,731,254

JACK

Filed May 2, 1927 3 Sheets-Sheet 1

Fig. 1.

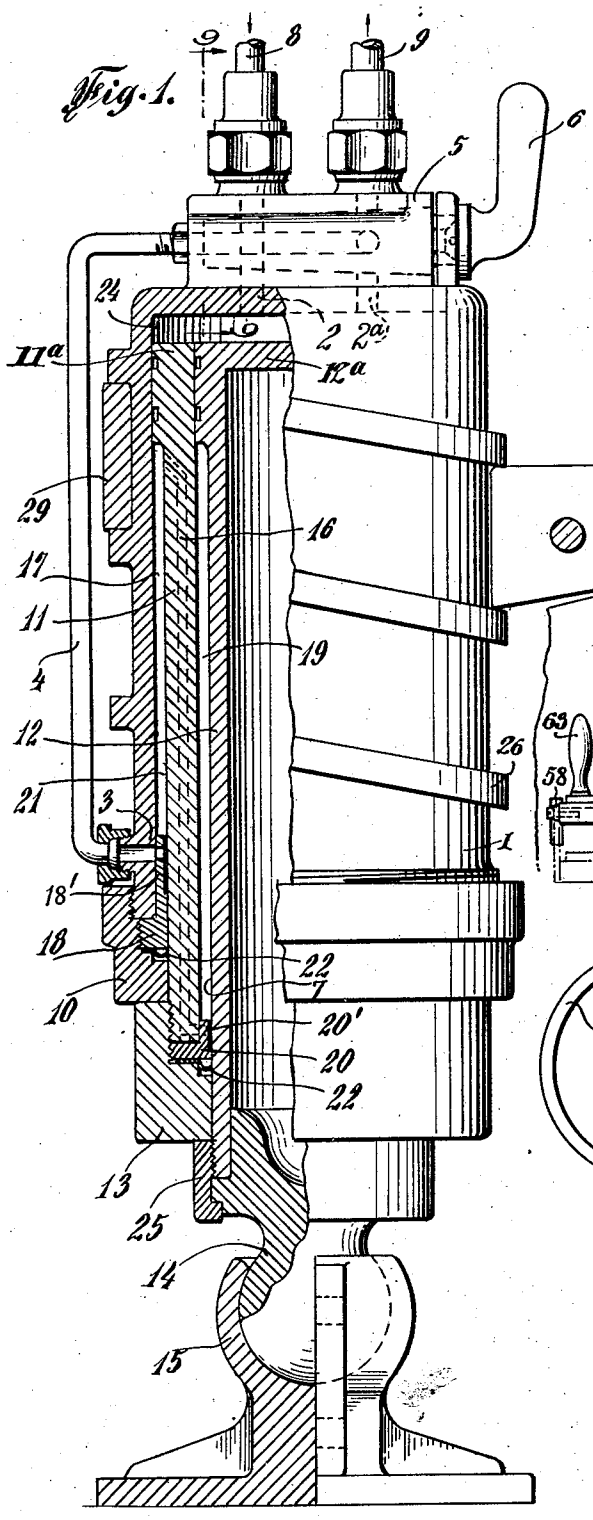

Fig. 9.

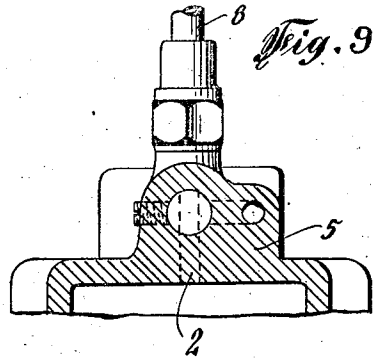

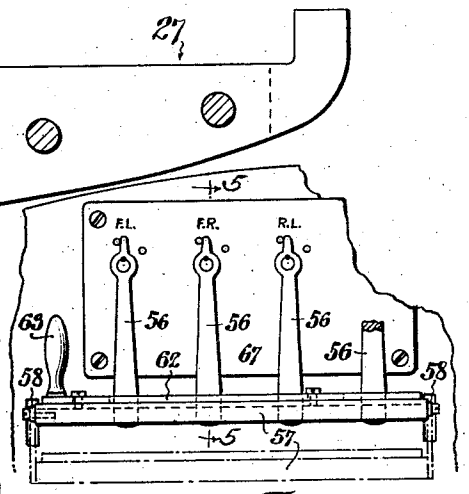

Fig. 4.

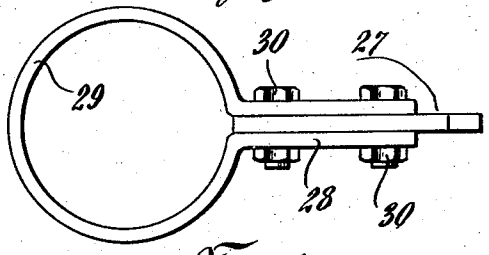

Fig. 10.

Alexander McNab
INVENTOR
BY Marks & Clark
ATTORNEYS

Oct. 15, 1929. A. McNAB 1,731,254

JACK

Filed May 2, 1927 3 Sheets-Sheet 2

Fig. 2.

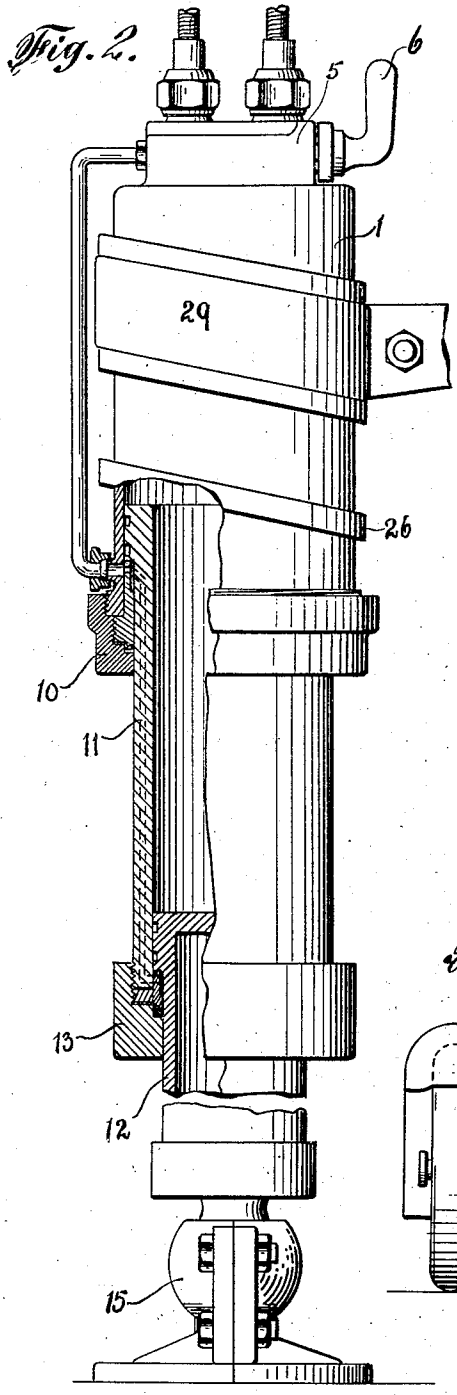

Fig. 5.

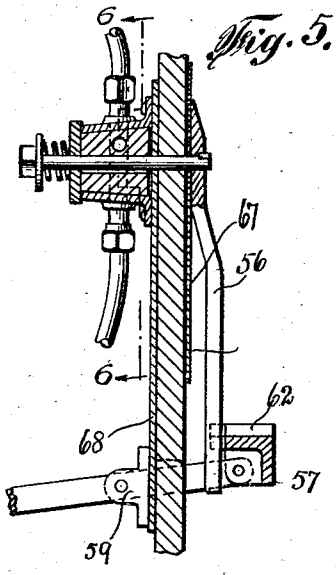

Fig. 6.

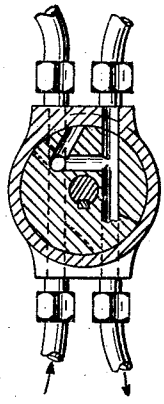

Fig. 7.

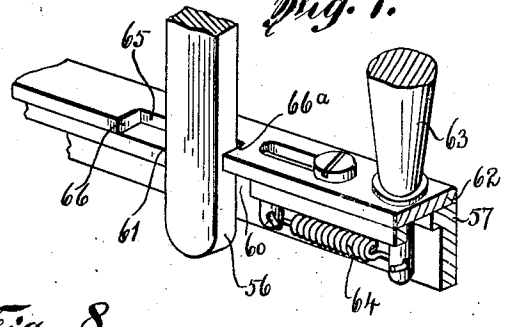

Fig. 8.

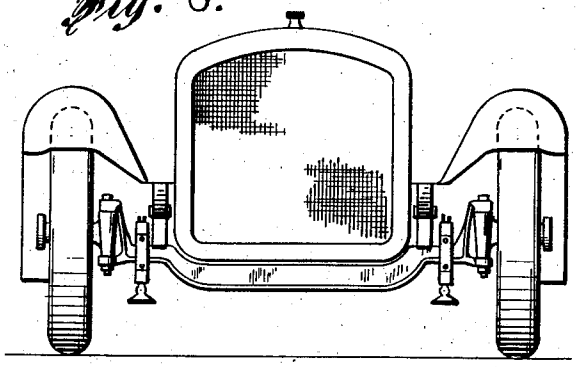

Alexander McNab

INVENTOR

BY Marks & Clerk

ATTORNEYS

Oct. 15, 1929. A. McNAB 1,731,254

JACK

Filed May 2, 1927 3 Sheets-Sheet 3

Fig. 3.

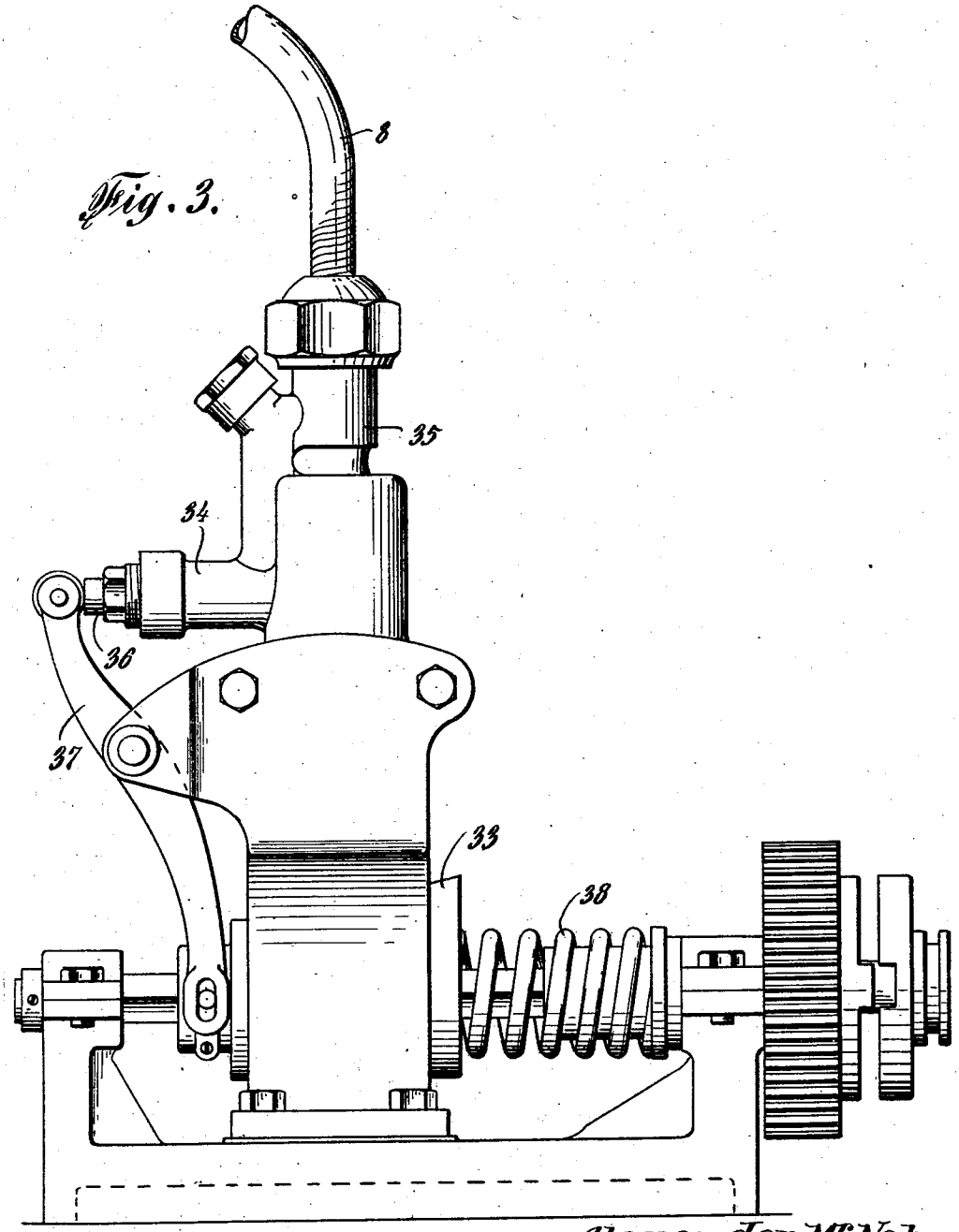

Alexander McNab
INVENTOR
BY Marks & Clerk
ATTORNEYS

Patented Oct. 15, 1929

1,731,254

UNITED STATES PATENT OFFICE

ALEXANDER McNAB, OF NEW YORK, N. Y., ASSIGNOR TO McNAB ABSORBOLIFT, INC., OF NEW YORK, N. Y., A CORPORATION OF NEW YORK

JACK

Application filed May 2, 1927. Serial No. 188,213.

This invention relates to lifting jacks and particularly to lifting jacks for vehicles.

The use of jacks for raising vehicles is often attended with a certain amount of difficulty as is well known. Automobiles for instance, differ in ground clearance both of the back and front axles and in the construction of the axles, and in some cars there are only one or two points on the rear axle which will afford a purchase for a jack.

It is difficult to provide a jack of a construction such that axles of different construction can be efficiently handled by the same jack, and also to provide a jack of compact form which will raise cars of widely differing ground clearance.

Although hydraulic jacks have been suggested and in this form of jack a somewhat more compact construction can be obtained, the disadvantages above referred to still obtain. In all cases it is necessary to apply an operating force to the jack, and in many cases where the grip of the jack on the part being lifted is insecure, attempts to operate the jack result in repeatedly dislodging it. Often the placing of the jack in position is an awkward matter, and entails considerable labor. Further, a portion of the work that has to be done is wasted in that the car has often to be lifted a considerable distance before taking up the slack in the springs and tires, while in cars using over-size or balloon tires, the distance to which the car must be lifted is still further increased.

The general object of the invention is to provide a fluid pressure jack of compact form and more efficient construction than those hitherto proposed or constructed, designed to overcome or reduce to a minimum the disadvantages above mentioned.

One object of the invention is to provide an improved hydraulic jack operated by fluid pressure supplied by an engine driven pump.

Another object of the invention is to provide an engine driven hydraulic jack providing a maximum lift in minimum height of jack.

A still further object of the invention is to provide a jack which may be readily attached to axles of widely different ground clearance.

A still further object of the invention is to provide improved controlling means for said jacks whereby a plurality of jacks permanently attached to a motor vehicle may be operated from the vehicle to raise any wheel of the car or any two or all four wheels of the car as desired.

A still further object of the invention is to provide a jack comprising a minimum number of moving parts and of robust and simple construction.

In the accompanying drawings various specific embodiments of the invention are described and illustrated, but it is to be understood that the scope of the invention is not limited in any way by the embodiments described and illustrated, but only as determined by the appended claims.

In the drawings:—

Figure 1 is a view in elevation of the jack in portable form, partly in section.

Figure 2 is a sectional view of the jack shown in Figure 1 in fully extended position.

Figure 3 is an elevation of the pump.

Fig. 4 shows a control mounted on the dash for a set of jacks permanently mounted on the axles of an automobile.

Fig. 5 is a section on line 5—5 of Fig. 4.

Fig. 6 is a section on line 6—6 of Fig. 5.

Fig. 7 is a perspective view of the clutch arm control.

Fig. 8 is a diagrammatic view showing an automobile having two of the novel jacks mounted on the front axle, two others being similarly mounted on the rear axle.

Fig. 9 is a detail view in section on the line 9—9 of Fig. 1.

Fig. 10 is a detail of the bracket arm mounted on the jack.

In the following description the specific form of jack referred to is one that may be carried in a tool box or used for heavy duty in a garage. In this form the pressure fluid would be led to a convenient point at which outlets would be arranged, such outlets being controlled by an ordinary cock arranged to connect the supply and return pipes of the pressure line with the supply and return valves arranged on the jack, or to close the

connections to the jack and connect the two sides of the pressure line.

The jack would in such cases preferably be provided with a length of flexible high pressure tubing ending in a connecting member adapted to be readily clamped to the outlet, the valve arranged on the head of the jack enabling the latter to be controlled in situ.

For illustrative purposes the ball checks have been shown as arranged on the jack, but they would of course be normally arranged in the coupling member attached to the jack pipe connection.

In another form of the invention in which a number of jacks are permanently mounted on the chassis of an automobile, no ball checks would be required, since the whole of the pressure supply system would be completely enclosed.

In the drawings 1 is the outer cylinder of a double extension jack, the one inlet valve being indicated at 2, outlet 2^a and another valve at 3, and 4 is a tube connecting the inlet 3 and the valve housing 5, in which is mounted a plug which may be operated by the handle 6. 8 indicates the pressure pipe connection, and 9 the return pipe connection to the valve housing.

The lower end of the cylinder 1 is closed by a combined packing gland and bearing member 10. Within the cylinder 1 is arranged a main piston 11 having a head 11^a. This piston is hollow and nested within it is an auxiliary piston 12 which extends through a member 13 closing the outer end of the main piston 11 and which is provided with a head 12^a formed similarly to the member 10. The piston 12 carries at its lower end a ball foot 14 clamped in a divided ball shaped socket 15 which is as shown in the drawing integral with a foot portion. The main piston 11 is turned down below its head portion to form a recess 17, and the travel of the piston in the cylinder 1 is limited by the upstanding flange 18′ of the nut 18. The auxiliary piston 12 is similarly turned down to provide a recess 19 and its travel in the piston 11 is limited by the upstanding flange 20′ of nut 20. The wall of the main piston is sufficiently thick to afford a sturdy support to the inner piston, and to carry passages 16 formed therein. These passages communicate with the space 17 at its upper end, and with the space 19 at its lower end. Pump washers 22 are clamped to the members 10 and 13 by means of the nuts 18 and 20 which are screwed down upon said washers. It will be observed that the passages 16 extend through the outer end of the wall 21 and are closed by the nut 20. This construction enables the passages to be readily cleaned by the insertion of a wire after removal of the member 13. It will be also noticed that the flanges of nuts 18 and 20 do not extend to the surface of the walls 21 and 7, and are provided with bores opposite the lower ends of the ducts 4 and 16 respectively, this arrangement enabling the pressure fluid to reach the spaces 17 and 19 when the pistons are in fully extended position as shown in Figure 2.

The operation of this part of the apparatus will, it is believed, be clear. Pressure fluid such as oil being admitted to the cylinder 24, the pistons will be extended at a rate dependent upon the speed of the engine. If this is high, the pump will be delivering a relatively large amount of fluid and the pistons will extend rapidly, the speed of extension decreasing as the load increases with the resistance offered to the movement of the pistons, the outer piston being arrested by engaging the ring 18′ and the inner piston by engaging the ring 20′, which will occur, of course, only when both pistons are fully extended.

One of the principal features of novelty of the jack resides in the means provided for retracting the pistons into nested relation. While in the hydraulic jack of usual construction the return of the piston to greater or lesser degree according to the ground clearance of the car would be effected fairly rapidly by the weight of the car, the piston would still be left hard up against the axle and difficulty might be experienced in dislodging the jack from this position, since owing to the necessarily close fit of the pistons in the cylinders considerable effort has to be expended to force the piston into the cylinder.

According to my invention, the pistons may be completely returned by pressure fluid. This is effected in the portable form of the pump by turning the valve by the handle 6 to connect the cylinder space 24 with the return pipe 9 and pressure pipe 8 through the port 3 with the spaces 17 and 19. The pistons will be rapidly returned inwardly until stopped by the plug 13 coming against the part 10 and a ring 25 against the part 13. In order to prevent oil from being spilled from the jack, the connections on the valve casing are preferably provided with ball valves arranged in housings projecting from the casing, though of course such ball valves might also be arranged in the connecting member serving to attach the jack to the fluid pressure outlet.

As shown in Fig. 1, the outer surface of the cylinder is provided with corrugations 26. These corrugations act to support an adjustable arm or bracket 27 formed by the projecting ends 28 of a band 29 of springy steel, and serve the purpose of insuring the secure positioning of the arm on the cylinder when once adjusted.

It will be readily understood that the bracket may be so constructed that it may be adjusted even after the pipe 4 is in position. For instance the bracket might be formed from spring steel, and, if desired bosses might

be arranged on the projecting portion forming the arm of the bracket, and these bosses bored and tapped with opposite threads coacting with a bolt having opposite threaded ends so that on slacking back the bolt the band of the bracket extending around the cylinder would increase in diameter sufficiently to be slipped over one or more corrugations until the desired position was reached, whereupon the nut could be tightened up thereby contracting the band 29 about the cylinder.

If the jack is to be permanently attached to a part of the vehicle, such as the axle, the band 29 could, of course, be shaped to be bolted to the axle or otherwise secured thereto.

In order to supply fluid under pressure to operate the jack in the manner hereinbefore described, a pump such as illustrated in Figure 3 may be advantageously utilized. This pump has a main pumping cylinder containing an operating plunger which is actuated by a cam 33 of varying throw and by a controlling cylinder 34 in communication with the pressure system on the jack side of an outlet valve 35 of the pump. The controlling cylinder 34 acts through a plunger 36 and lever 37 to adjust the position of the cam 33, according to the load against which the pump is working, in opposition to the effort of an expansion spring 38. The pump may be driven from any suitable source of power, and in cases where the jacking system is installed on an automobile as part of the running equipment the pump is driven through a clutch by control mechanism as hereinafter described.

Figure 4 shows a convenient control arrangement for a jacking system comprising four jacks. The control is adapted to be mounted on the dash 55 and comprises four separate small levers 56 each controlling a jack and adapted to be locked in operative or inoperative position by a bar 57 the depression of which serves to effect the clutching of the pump shaft to the driving means.

The construction of the bar 57 in the form illustrated is such that when in a depressed position any of the levers 56 may be manipulated independently of the others or a portion of the bar while still in its upper position can be operated to move all four levers to operative position, the bar being thereafter depressed to clutch the pump shaft to the engine.

The bar 57 may be of a T section mounted at each end on arms 58 pivoted at 59 on the dash and having an up and down movement only.

The horizontal section of the bar 57 is provided with notches 60, the left hand edges of which form abutments 61 adapted to come against the sides of the levers 56. Mounted to slide on the horizontal section of the bar is a flat bar 62 provided at one end with a handle 63 and normally held to overlie the horizontal portion of the T shaped bar by a strong spring 64 holding the opposite edge 66a against the levers 56. The bar is guided for a sliding movement on 57 by a pin and slot mounting.

The flat bar 62 is also provided with notches 65, the left hand edges of which, as seen in Fig. 7, form abutments 66 coming against the sides of the levers 56 on the same side as that on which the edges 61 of the notches in the clutch bar engage the levers.

By displacing the bar 62 as described, to the left as seen in Fig. 7, the levers are swung to the operative position, after which the bars 57 and 62 may be depressed to put in the pump clutch.

Return of the clutch bar to its upper position cannot take place until all the levers 56 are in inoperative position, since the ends of the levers will come over a solid portion of the flat bar.

The valves controlling the flow of fluid to the jacks are of ordinary form being provided with conduits interrupting or making communication between the pump pressure and return pipes and the pipes conveying the working fluid to and from the upper or lower sides of the jack pistons.

The valves could be mounted on a plate 67 carrying the levers 56 or could be mounted on a second plate 68, adapted to be attached to the rear of the dash as shown in the drawings, and also serving to carry the pivots for the clutch bar, the valve spindles projecting through the dash and the plate 67.

Fig. 8 is a view showing how two of the jacks may conveniently be mounted on the front axle of a car, two jacks being similarly arranged on the rear axle as a permanent fixture, a simple modification of the jack bracket enabling this to be readily effected.

With the control system just described one of the jacks can be operated in order to carry out any repairs to the wheels or springs that may be required, either at one point at a time, or two or four points simultaneously. It might be desired for instance, to change from one set of tires to another in which case much time would be saved by operating all four jacks thus enabling garage mechanics to work on all four wheels at once.

The simultaneous operation of the four jacks could also be used when raising a car off its tires when laying up the car for an extended period.

The raising of a car off its wheels could also be utilized as a safety device when leaving the car parked in a public place, since it would be almost impossible to break into the car to operate the jacks without attracting attention. Further it would be a simple matter to provide a combination or other lock by which the clutch operating bar could be locked in lowered position. It would not of course, be necessary to declutch the pump

when leaving the car under these circumstances, since the engine would be switched off.

It will be realized that a jack construction and operating system according to the invention provides a considerable improvement on those commonly in use. The construction of the jacks and of pump and of the control means is simple, efficient and reliable, and can be cheaply manufactured to provide a very attractive construction.

I claim—

1. An hydraulic jack comprising a cylinder, a plurality of pistons within said cylinder arranged one within the other, conduits for supplying fluid under pressure to the upper or lower sides of the heads of said pistons, said conduits communicating with spaces between the cylinder ends and said pistons through channels arranged upon the wall of the outer piston.

2. An hydraulic jack comprising a cylinder, a plurality of pistons within said cylinder arranged one within the other, conduits for the supply of pressure fluid to spaces above and below the heads of said pistons, and channels arranged within the wall of the outer piston communicating at one end with a space below the head of the outer piston and communicating at the other end with a space located below the inner piston head.

3. An hydraulic jack comprising a cylinder, a plurality of pistons within said cylinder arranged one within the other, conduits for the supply of pressure fluid to spaces above and below the heads of said pistons, and channels arranged within the wall of the outer piston communicating at their upper ends adjacent to and below the head of the outer piston and communicating at their lower ends with a space between the surface of the inner piston and the surface of the outer piston.

4. An hydraulic jack comprising a piston and a cylinder within which said piston is adapted to reciprocate, a second piston mounted for movement in the first piston and adapted to be extended into engagement with the surface on which the vehicle to be jacked rests, conduits for the supply of pressure fluid to spaces above and below the heads of said pistons, and channels extending longitudinally within the wall of the outer piston and adapted to communicate at one end with a space between the outer surface of the first mentioned piston and the inner surface of the cylinder and at the other end with a space between the outer surface of the inner piston and the inner surface of the first mentioned piston.

5. An hydraulic jack system comprising a plurality of jacks, means driven by a prime mover for supplying fluid under pressure, clutch mechanism whereby said prime mover may be connected to or disconnected from said means for supplying fluid under pressure, valve means for controlling the flow of fluid to each of said jacks, interconnecting means interposed between said clutch mechanism and said controlling means, said interconnecting means comprising a member acting normally to hold said controlling means in inoperative position but movable to allow operation of said latter means, said control means acting to hold the clutch mechanism in position to maintain the clutch in engagement until said control means have again been brought into a position to cut off the supply of fluid to the jacks.

6. An hydraulic jack system comprising means for supplying fluid under pressure, a plurality of jacks each of which comprises a cylinder, piston means mounted within said cylinder, and conduits for supplying fluid under pressure between the cylinder and said piston means, clutch mechanism for connecting or disconnecting each or all of said cylinders from said means for supplying fluid under pressure, valve means for controlling the flow of fluid to each of said jacks, interconnecting means interposed between said clutch mechanism and said controlling means, said interconnecting means comprising a member acting normally to hold said controlling means in inoperative position but movable to allow operation of said latter means, said control means acting to hold the clutch mechanism in position to maintain the clutch in engagement until said control means have again been brought into a position to cut off the supply of fluid to the jacks.

In testimony whereof I have affixed my signature.

ALEXANDER McNAB.