June 22, 1965 L. A. NASH 3,190,519

TAPE FEEDING MECHANISM FOR TELEGRAPH TICKER

Filed Dec. 2, 1963

FIG. 1

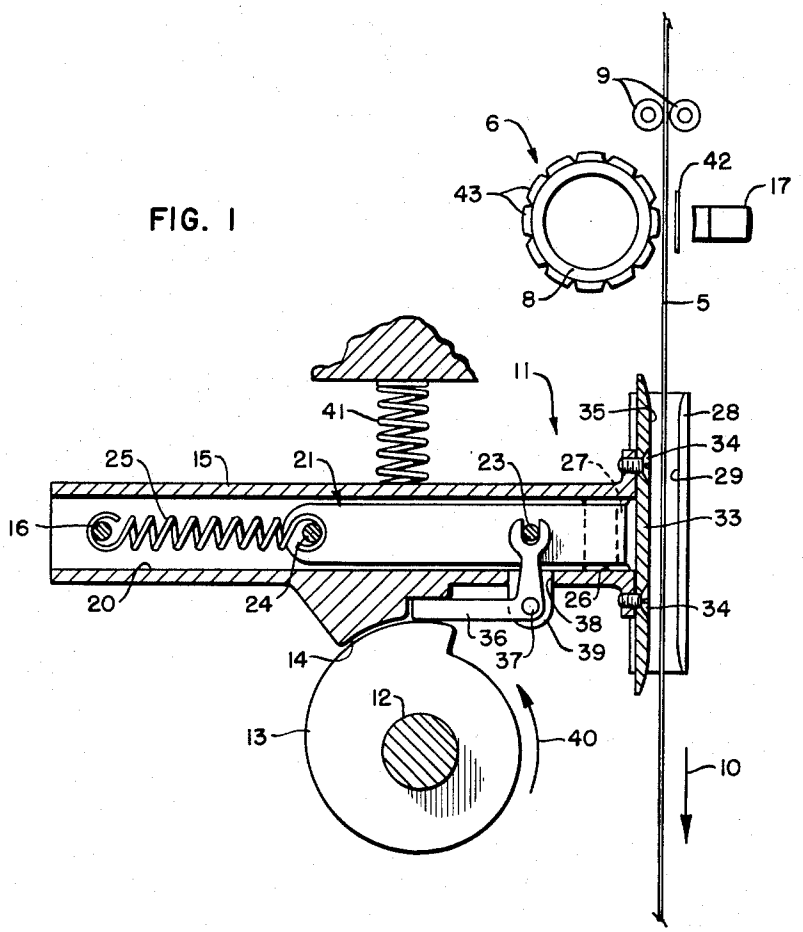

FIG. 2

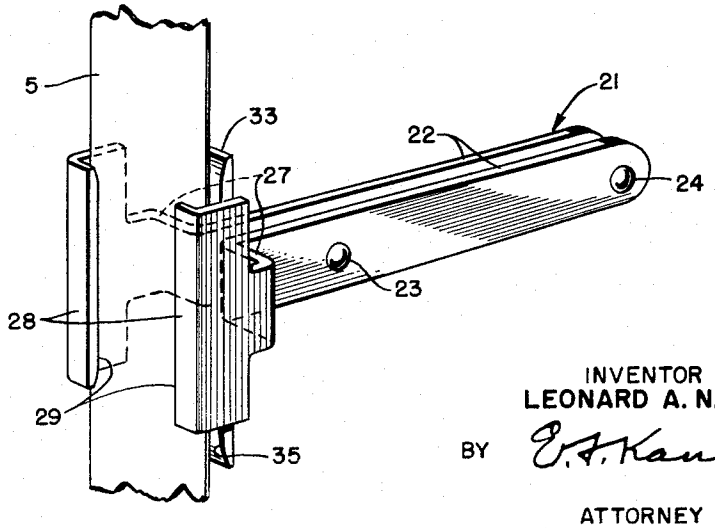

INVENTOR
LEONARD A. NASH

BY E. F. Kane

ATTORNEY

United States Patent Office 3,190,519 Patented June 22, 1965

3,190,519

TAPE FEEDING MECHANISM FOR TELEGRAPH TICKER

Leonard A. Nash, Evanston, Ill., assignor to Teletype Corporation, Skokie, Ill., a corporation of Delaware

Filed Dec. 2, 1963, Ser. No. 327,344
6 Claims. (Cl. 226—164)

This invention relates to a tape feed mechanism for a telegraph printer and more particularly to a step-by-step mechanism for feeding telegraph ticker tape in such a manner as to not obscure the last characters printed by the ticker.

In printing telegraph tape on "tickers" such as those used for printing stock exchange information in brokerage offices, it is highly desirable that the last quotation printed by the ticker be clearly visible. In order that the tape feeding operation may be accomplished with a high degree of accuracy and certainty it is sometimes desirable to pull the tape through the ticker rather than to push it past the printing position of the ticker. Since the tape coming from the ticker has printing on it which should not be obscured at any point, the pulling mechanism should not cover the printing at any point.

It is an object of the present invention to provide a tape feeding device for pulling tape through a printing position without obscuring any of the matter printed at the printing station.

In accordance with one embodiment of the invention a clamp for gripping the tape is provided which comprises a base against which the tape may be clamped by clamping means which grip only the extreme edges of the tape. The base is fixed to the end of a pivoted member that is spring urged to carry a camming surface on it into engagement with a cam that rotates through one complete cycle of rotation for each printing operation. The clamping means which engage the extreme edges of the tape are mounted on a clamp support that is spring urged toward the pivot point of the base supporting lever and a bell crank lever, which rides on the same cam that actuates the pivoted member, serves to move the clamping means to their released position when the high point of the cam is in operative association with one arm of the bell crank lever. The spring attached to the clamp support will cause the clamping means to engage the tape when the bell crank moves from the high point of the cam to the lower surface and while the tape is clamped against the base by the clamping means, the cam will permit the camming surface on the pivoted member to drop off the high point of the cam thereby to feed tape.

A more complete understanding of the invention may be had by reference to the accompanying drawing wherein:

FIG. 1 is a fragmentary view showing a printing wheel with a tape feed mechanism shown in section associated therewith;

FIG. 2 is a fragmentary perspective view of the clamps showing their position relative to the base with which they are associated.

Referring now to the drawing wherein like reference numerals designate the same parts throughout the several views, it will be seen that a tape feed mechanism is provided for feeding a tape 5, step-by-step, from a printer mechanism 6 which comprises a print hammer 17, of the usual type, associated with a typewheel 8. A pair of pinch rollers 9 which may be of any suitable type resiliently oppose the movement of the tape in the direction of the arrow 10. The tape, after having quotations printed on it in the usual manner by the coaction of the print hammer 17 and typewheel 8, is directed to the tape feeding device designated generally by the numeral 11. The tape

feeding device 11 includes a shaft 12 connected to the printing mechanism and driven by any suitable connections in timed relation to the operation of the print hammer 17. The shaft 12 carries a cam 13 of simple contour for cooperation with a camming surface 14 on a pivoted tape feed member 15. The tape feed member 15 is mounted for oscillatory movement on a stationary pivot 16. The tape feed member 15 has a guide channel 20 formed in it in which a tape clamp support 21 may be reciprocated. This tape clamp support 21 is comprised of a pair of slide members 22 that are held in spaced relation, one to the other, by a pair of shouldered pins 23 and 24. The pin 23 serves as a drive pin for the tape clamp support 21 and the pin 24 has one end of a tension spring 25 attached to it. The other end of the spring 25 is attached to the stationary pivot 16 and consequently the tape clamp support 21 is urged to the left (FIG. 1) under spring tension.

At its end remote from the stationary pivot 16, the tape feed member 15 is cut away, as shown at 26, to receive laterally extending portions 27 of the slide members 22. The laterally extending portions 27 of the slide members 22 are arranged to extend outwardly through the wall of the tape feed member 15, where it is cut away as indicated at 26, and the portions 27 carry a pair of tape clamps 28. Tape engaging lips 29 are formed at the free ends of the tape clamps 28 for engaging a relatively large area along the edge of tape 5 but a narrow area transversely of the tape.

The free end of the pivoted tape feed member 15 has a base member 33 fixed to it by means of machine screws 34 after the tape clamp support 21 has been mounted in the channel 20. The base member 33 has a tape engaging surface 35 for engagement with the back of the tape 5 when the tape clamps 28 are moved to the right (FIG. 2) left in FIG. 1, under the action of spring 25.

As shown in FIG. 1 the shouldered pin 23 extends through the bifurcated end of a bell crank lever 36 that is oscillatable about a pivot pin 37. The vertically extending end of the bell crank lever 36 projects through a slot 38 in the tape feed member 15 and into the space between the slide members 22. The pivot pin 37 is mounted on a projection 39 formed on the tape feed member 15 adjacent the slot 38. The lower surface of the horizontal arm of the bell crank lever 36 rides on the surface of the cam 13 and when the cam rotates in the direction of the arrow 40 the bell crank lever 36 will be rocked in a counterclockwise direction about its pin 37 by the contractile or tension spring 25. The horizontally extending arm of the bell crank lever 36 rides the surface of the cam 13 in advance of the camming surface 14 on the tape feed member 15. The tape feed member 15 is urged to carry its camming surface 14 into engagement with the cam 13 by a compression spring 41. Consequently, when the cam 13 goes through a cycle of rotation its high portion will cam both the bell crank lever 36 and the tape feed member 15 counterclockwise about the pivot 16.

In addition to this movement imparted to the bell crank lever 36 the bell crank lever 36 will be rocked counterclockwise about its pivot pin 28 by the spring 25 when the end of the horizontal arm of the bell crank lever 36 moves off of the high portion of the cam 13. The lips 29 of the tape clamps 28 on the end of the arms or portions 27 of slide members 22 are relatively narrow and will engage the face of the tape 5 on which the printing has been effected but will only grip the extreme right and left edges of the tape as shown in FIG. 2 and will clamp the tape against the surface 35.

In the operation of the apparatus the tape feed member 15 and bell crank lever 36 will be in the position shown in the drawing during the time when the print hammer 17 is driving an inking ribbon 42 against the

tape 5 to cause the tape 5 to strike an individual type face 43 on the type wheel 8. Immediately after the print hammer 17 drives the ribbon 42 against the tape 5, the shaft 12 in its rotation will drive the cam 13 to a point where the horizontal arm of the bell crank lever 36 will drop off of the high portion of the cam 13 onto the lower portion thereof under the influence of the spring 25 thereby to move the tape engaging lips 29 of the clamps 28 to the left (FIG. 1) to clamp the tape 5 tightly against the surface 35. Shortly thereafter the cam surface 14 will drop off of the high portion of the cam 13 as the cam rotates in the direction of the arrow 40 to feed the tape 5, which has its edges now tightly clamped against the surface 35, in the direction of the arrow 10. As the cam 13 continues to rotate the bell crank lever 36 will be oscillated in a clockwise direction to release the tape 5 and as soon as the clamps 28 have released the tape 5, the cam 13 will drive the tape feed member 15 in a counterclockwise direction about the pivot 16 to restore the tape feed mechanism to the condition shown in the drawing preparatory to the feed of the tape 5 in another step of its movement.

Although a specific embodiment of the invention is shown in the drawing and described in the foregoing specification, it will be understood that invention is not limited to the specific embodiment described but is capable of modification and rearrangement and substitution of parts and elements without departing from the spirit of the invention.

What is claimed is:

1. Tape feed apparatus for intermittently drawing a tape through a printing mechanism comprising,
- a tape feed member having a tape engaging surface disposed to engage the back of a tape having printing on its front surface,
- a tape clamp support,
- tape clamps carried by said support for engaging restricted areas of the front surface of the tape along the edges thereof outside the printed area to clamp the tape to the tape engaging surface of the tape feed member,
- a lever pivoted on the tape feed member for reciprocating said clamp support with respect to the tape feed member,
- a cam for oscillating said tape feed member and for actuating said lever, and
- spring means for urging said tape feed member and said lever to operative camming association with said cam.

2. Tape feed apparatus for intermittently drawing a tape through a printing mechanism comprising,
- a hollow tape feed member having a tape engaging surface disposed to engage the back of a tape having printing on its front surface,
- a tape clamp support slidably mounted in said feed member,
- tape clamps carried by said support for engaging restricted areas of the front surface of the tape along the edges thereof outside the printed area to clamp the tape to the tape engaging surface of the tape feed member,
- spring means for urging said clamp support to a position to carry the tape clamps into clamping engagement with the tape,
- a lever pivoted on the tape feed member for moving said clamp support against the action of said spring means to a position to disengage the clamps from the tape,
- a cam for oscillating said tape feed member and for actuating said lever, and
- spring means for urging said tape feed member and said lever to operative camming association with said cam.

3. Tape feed apparatus for intermittently drawing a tape through a printing mechanism comprising,

- an oscillatable tape feed member having a tape engaging surface disposed to engage the back of a tape having printing on its front surface,
- a pivot for supporting an end of said member remote from said surface for oscillation,
- a tape clamp support,
- tape clamps carried by said support for engaging restricted areas of the front surface of the tape along the edges thereof outside the printed area to clamp the tape to the tape engaging surface of the tape feed member,
- spring means attached to said pivot and to said clamp support for urging said clamp support to a position to carry the tape clamps into clamping engagement with the tape,
- a bell crank lever pivoted on the tape feed member and having an arm connected to said clamp support for moving said clamp support with respect to the tape feed member to carry the tape clamps out of clamping engagement with the tape,
- a cam for oscillating said tape feed member and for engaging a second arm of the bell crank lever and actuating said lever, and
- spring means for urging said tape feed member and said lever to operative camming association with said cam.

4. Tape feed apparatus for intermittently drawing a tape through a printing mechanism comprising,
- a cam operated in timed relation to the printing mechanism, a tape feed member having a cam surface for engagement with said cam for oscillation thereby,
- a clamp support mounted for reciprocation with respect to said feed member,
- a cam lever mounted on said feed member and actuated by said cam for imparting reciprocation to said clamp support,
- a camming surface on said cam lever for engagement with said cam,
- means for urging the cam surface on said feed member into engagement with said cam to feed a tape,
- a tape feed surface on said tape feed member for engagement with the back of the tape, and
- tape clamps disposed on opposite sides of the tape feed surface and mounted on said clamp support for clamping the edges of said tape against the tape feed surface when said cam lever moves the clamp support in one direction.

5. Tape feed apparatus for intermittently drawing a tape through a printing mechanism comprising,
- a drive member operated in timed relation to the printing mechanism,
- an oscillatable tape feed member in engagement with said drive member for oscillation thereby,
- a clamp support mounted for reciprocation with respect to said feed member,
- a lever also in engagement with said drive member for imparting reciprocation to said clamp support relative to said tape feed member,
- means for urging the said feed member and said lever into engagement with said drive member,
- a tape feed surface on said tape feed member for engagement with the back of the tape, and
- tape clamps disposed on opposite sides of the tape feed surface and mounted on said clamp support for clamping the edges of said tape against the tape feed surface when said lever moves the clamp support in one direction.

6. Tape feed apparatus for intermittently drawing a tape through a printing mechanism comprising,
- a cam operated in timed relation to the printing mechanism,
- a tape feed member having a cam surface for engagement with said cam for oscillation thereby,
- a clamp support reciprocatable with respect to said feed member,

a cam lever carried by said feed member and actuated by said cam for imparting reciprocation to said clamp support with respect to said feed member,

a camming surface on said cam lever for engagement with said cam at a point on the cam in advance of the area of the cam in engagement with the cam whereby the cam lever follows the cam contour ahead of said camming surface,

means for urging the cam surface on said feed member into engagement wtih said cam to feed a tape,

a tape feed surface on said tape feed member for engagement with the back of the tape, and

tape clamps disposed on opposite sides of the tape feed surface and mounted on said clamp support for clamping the edgs of said tape against the tape feed surface when said cam lever moves the clamp support in one direction.

References Cited by the Examiner

UNITED STATES PATENTS

2,716,921	9/55	Holman	226—161 X
2,803,455	8/57	Powers	226—164
2,803,456	8/57	Powers	226—164
2,803,457	8/57	Powers	226—164

SAMUEL F. COLEMAN, *Primary Examiner.*