March 11, 1947. H. J. FRAMHEIN 2,417,396

PALLET TRUCK

Filed Sept. 25, 1943 4 Sheets-Sheet 1

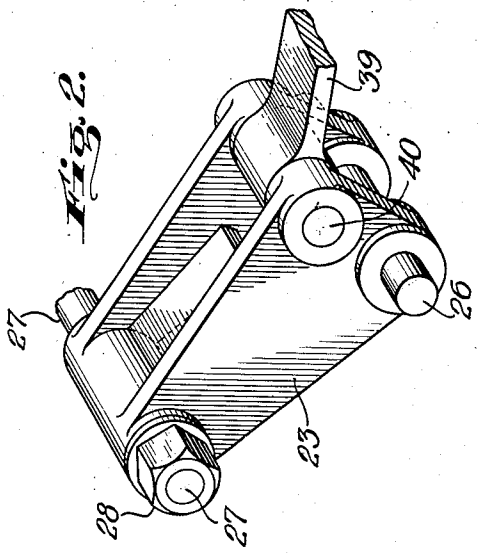

Fig. 2.

Fig. 1.

INVENTOR
H. J. Framhein
BY
A. H. Golden
ATTORNEY

March 11, 1947. H. J. FRAMHEIN 2,417,396

PALLET TRUCK

Filed Sept. 25, 1943 4 Sheets-Sheet 2

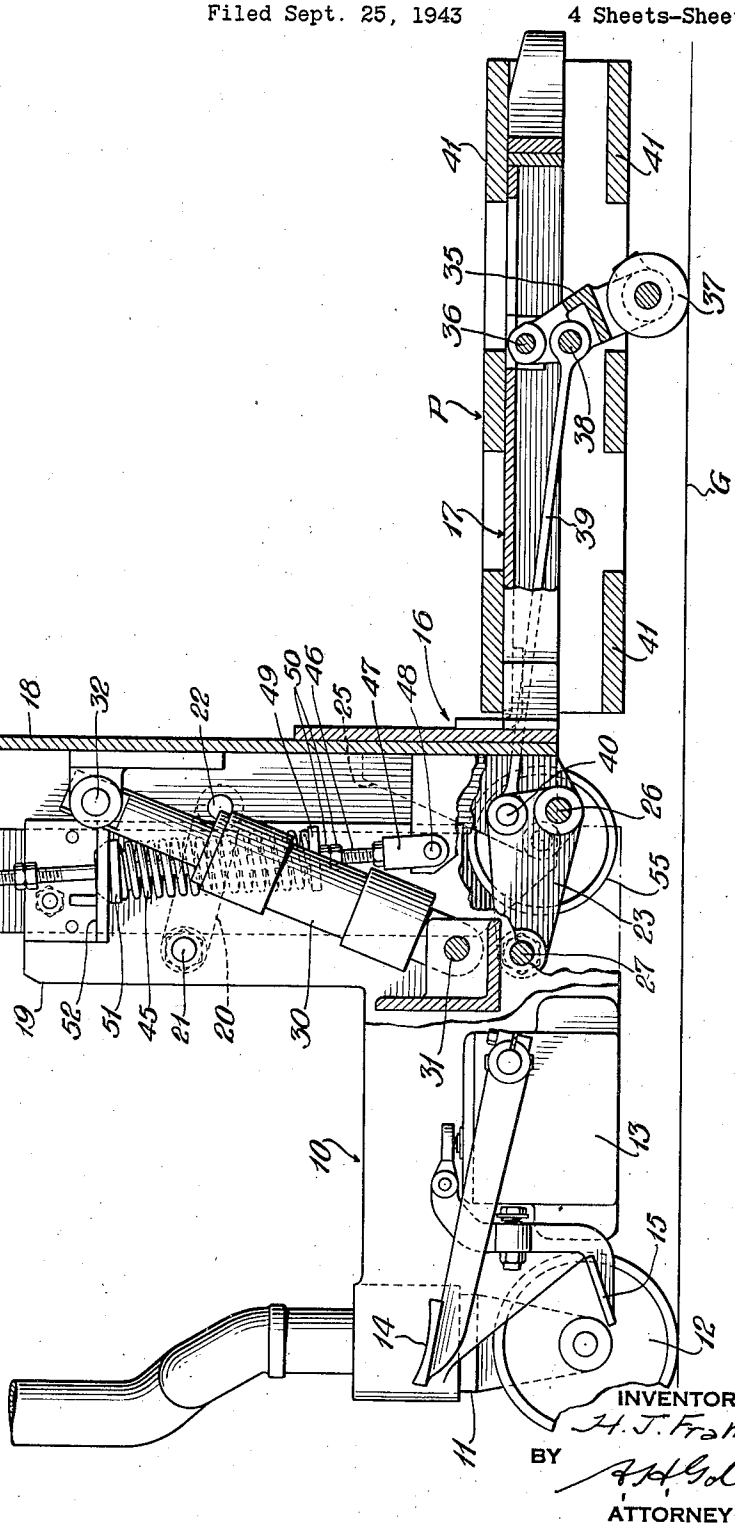

Fig. 3.

INVENTOR
H. J. Framhein
BY
A. H. Golden
ATTORNEY

March 11, 1947. H. J. FRAMHEIN 2,417,396

PALLET TRUCK

Filed Sept. 25, 1943 4 Sheets-Sheet 3

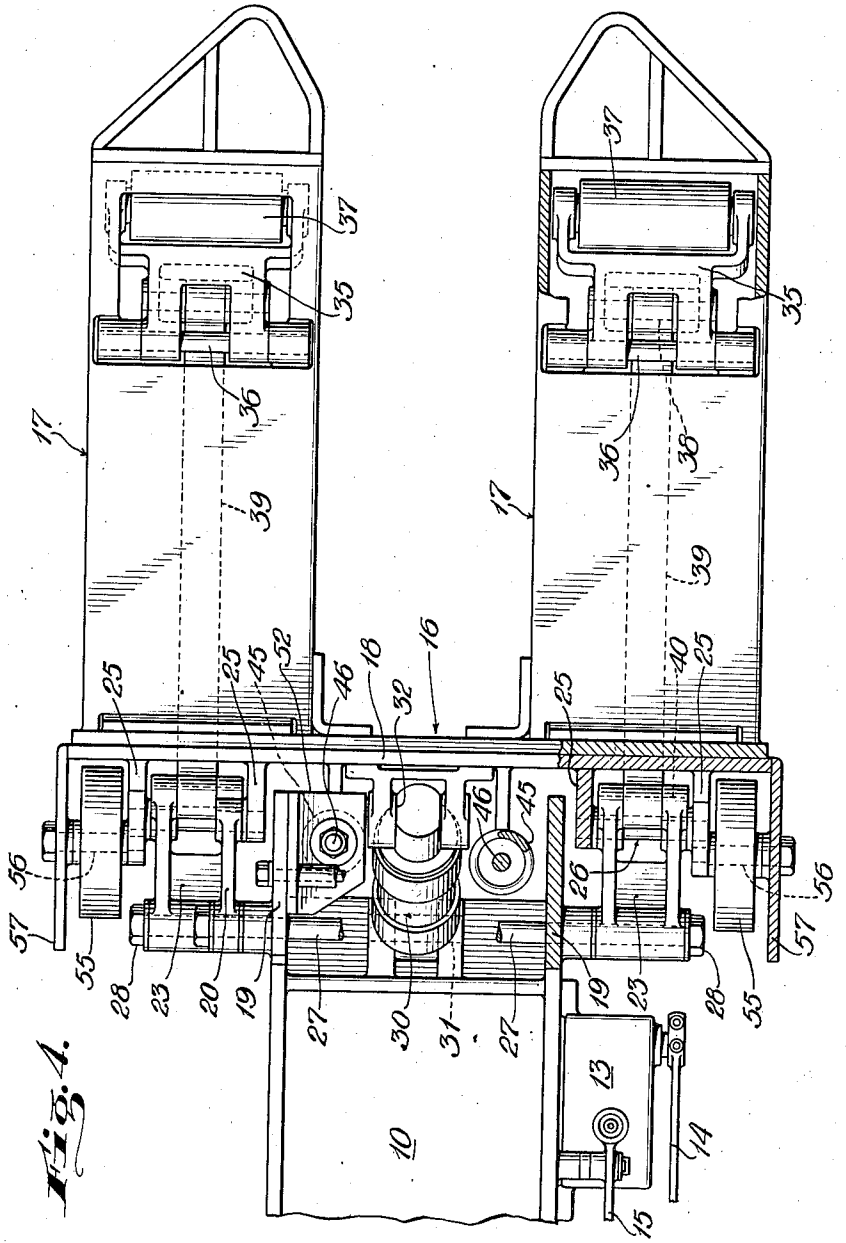

Fig. 4.

INVENTOR
H. J. Framhein
BY
R. H. Golden
ATTORNEY

March 11, 1947. H. J. FRAMHEIN 2,417,396

PALLET TRUCK

Filed Sept. 25, 1943 4 Sheets-Sheet 4

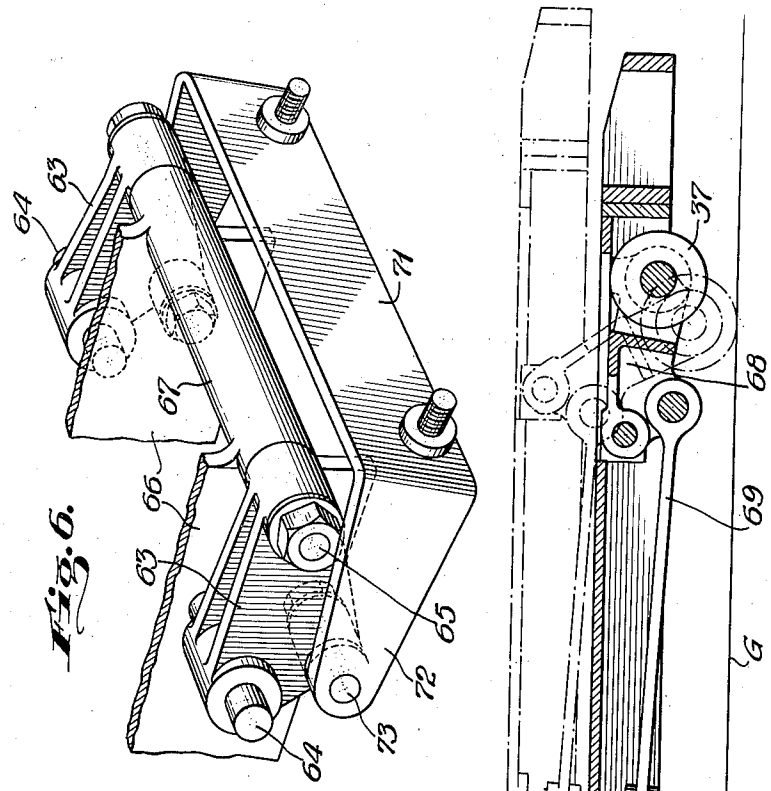

Fig. 6.

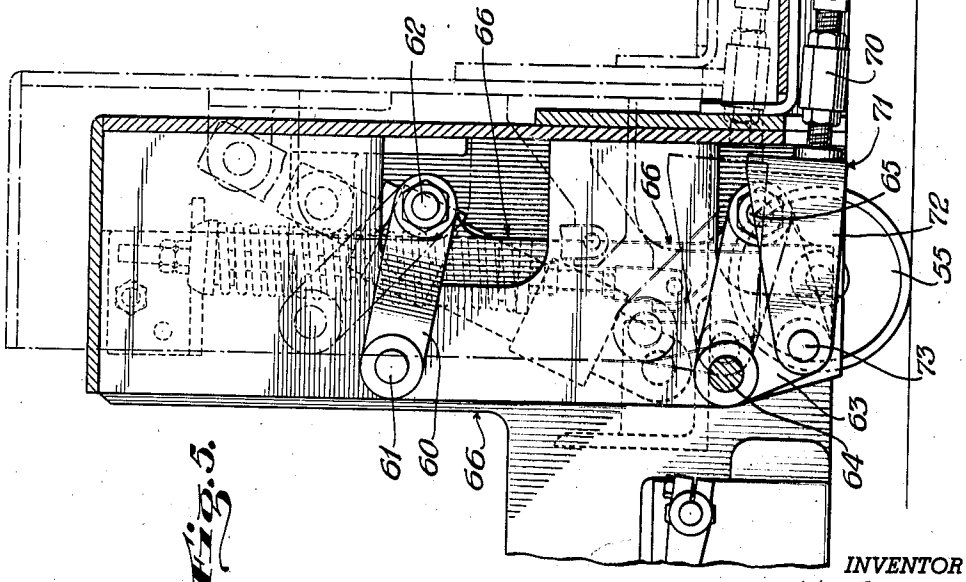

Fig. 5.

INVENTOR
H. J. Framhein

BY

ATTORNEY

Patented Mar. 11, 1947

2,417,396

UNITED STATES PATENT OFFICE

2,417,396

PALLET TRUCK

Herbert J. Framhein, Chicago, Ill., assignor to The Yale & Towne Manufacturing Company, Stamford, Conn., a corporation of Connecticut

Application September 25, 1943, Serial No. 503,745

10 Claims. (Cl. 254—2)

1

This invention relates to industrial lift trucks, and more particularly to industrial lift trucks of the type shown in my application Serial No. 458,035 filed September 11, 1942. In that application I disclose a basic improvement in industrial trucks of the type adapted for cooperation with pallets, and more particularly, I disclose new and novel means for facilitating the entry of the load platform of an industrial truck between the floors of a pallet.

In brief, this is accomplished in my invention through the provision of means for maintaining the load lifting wheels at the rear of the elevating platform in an elevated position when the elevating platform is in its fully lowered position. Intermediate wheels are preferably provided for supporting the truck for movement when the load lifting wheels are elevated, the lifting of the elevating platform through the movement of the load lifting wheels acting to raise the intermediate wheels so that they will not interfere with the movement of the truck.

Modifications of the invention disclosed in the said application supra, are set forth in my application Serial No. 469,324 filed December 17, 1942, and Serial No. 493,701 filed July 7, 1943. In the present application I illustrate a further modification of my invention applied to trucks of the class in which the lifting wheel links at the rear of the elevating platform are actuated by the links pivotally connecting the forward end of the elevating platform of the truck to the lifting head. In order to simplify the description of this modification of my invention I shall show it applied to the trucks of this class disclosed in the Quayle Patent No. 2,274,164 granted February 24, 1942, and in the Hastings Patent No. 2,234,925 granted March 11, 1941. A reading of those patents will be helpful toward a fuller understanding of this invention.

In brief, the object of my invention disclosed and claimed in this application is the adaptation of a truck of the class indicated for facilitated cooperation with a pallet.

As one feature of my invention through which the objectives thereof are obtained, the front connecting links between the elevating platform and the lifting head are adapted to hold the rear wheel lifting links in position to maintain the lifting wheels off the ground when the elevating platform is in its fully lowered position. A further feature of my invention resides in the use of intermediate wheels, preferably secured to the elevating platform, for supporting the truck for movement when the elevating platform is

2

lowered and the lifting wheels are off the ground. As a still further feature of my invention the intermediate wheels are raised off the ground as the lifting wheels are lowered and the elevating platform is lifted.

I have thus outlined the more important features of my invention in order that my contribution to the art may be better understood and in order that the relation of my contribution to the prior art may be better comprehended. I do believe that my contribution is a broad and valuable one and that I am entitled to patent claims that will prevent newcomers in the field from utilizing my contribution to the art with such variations in physical structure as will readily occur to those skilled in the art. Also, while I have described generally several important features of my invention, there are other important features that will be described particularly in the specification and will be claimed in the claims appended hereto.

Referring now to the drawings:

Fig. 1 illustrates in vertical partial section a truck to which my invention is applied.

Fig. 2 is a perspective view of one of the forward links connecting the elevating platform to the lifting head and adapted to actuate the rear lifting wheel links.

Fig. 3 is a view similar to Fig. 1 showing the elevating platform in an elevated position.

Fig. 4 is a plan view of the truck of Figs. 1 and 3.

Fig. 5 is a view similar to Fig. 1 showing a modified form of truck in which the elevating platform is pivoted in a somewhat different manner to the lifting head.

Fig. 6 is a perspective view of the linkage mechanism whereby the rear lifting wheels of the second modification are actuated.

Referring first to Figs 1–4, the lifting head of the truck is designated by reference numeral 10 and is shown supported by a steering head 11 having a steering wheel 12. A hydraulic pump is designated by reference numeral 13 and is actuated by a treadle 14. A release treadle 15 for the hydraulic pump 13 is adapted to control the lowering movement of the elevating platform as will hereinafter be set forth.

The elevating platform is designated generally by reference numeral 16 and is of the U type having a pair of legs each designated by reference numeral 17. The forward end of the elevating platform 16 is in the form of a vertical standard 18 that is pivotally connected to a vertical standard 19 of the lifting head 10. The connection

is made at the upper end of the elevating platform standard 18 through a pair of links 20 pivoted to the lifting head standard 19 at 21, and to the elevating platform standard at 22.

The lower end of the elevating platform standard 18 is pivoted to the lower end of the lifting head standard 19 through a pair of links designated by reference numeral 23 and one of which is best shown in Fig. 2. Referring now to Fig. 4 it will be noted that the lower end of the standard 18 of the lifting platform 16 has at each side a pair of brackets 25 on which is mounted a shaft 26, each link 23 being pivotally supported on the standard 18 through one of the shafts 26. The forward end of each link 23 is supported relatively to the lifting head by a shaft 27 secured at each end by a nut 28 relatively to the said links 23. It is now readily seen that the elevating platform may be swung through upper links 20 and lower parallel links 23 relatively to the lifting head so as to be elevated relatively thereto.

The lifting of the front end of the elevating platform 16 on the upper and lower links is accomplished by the hydraulic ram assembly 30 pivoted at its lower end at 31 on the lifting head, and at 32 relatively to the standard 16. The rear end of the elevating platform 16 is adapted for lifting movement simultaneously with the forward end, this action being accomplished by the pivotal movement of the rear wheel lifting links 35 pivoted at 36 to each of the legs 17 of the elevating platform 16. Each link 35 carries a lifting wheel 37 and is pivoted at 38 to a tension rod 39 that extends forwardly, and as best shown in Fig. 2 is pivoted at 40 to one of the links 23.

In the usual type of truck as disclosed in the Quayle patent, when the elevating platform is in its lowered position of Fig. 1, the links 23, rods 39 and lifting wheel links 35 are positioned so that the wheels 37 are against the ground G. In such trucks it is relatively difficult to move the elevating platform into position between the boards 41 of a pallet P shown in Fig. 1, and numerous expedients have been suggested. In my truck, the arrangement of the parts is such that when the elevating platform is in its fully lowered position of Fig. 1, the rear lifting wheels 37 are held up and away from the ground as illustrated. This action is made possible by the particular novel arrangement of the rear wheel lifting links 35, the rods 39 and the links 23 relatively to one another, all as is clearly shown in my drawings.

For pressing the elevating platform into its position of Fig. 1; that is, into its fully lowered position, I utilize a pair of springs 45. Each of these springs 45 is mounted about a shaft 46 that through the bifurcated shackle 47 is secured at 48 to the elevating platform 16. Each spring 45 presses at its lower end against a disk 49 adjustably secured by nuts 50 to the rods 46. At its upper end each spring 45 presses against the lifting head through the medium of a rounded washer 51 lying against a shelf 52 forming part of the lifting head 19. It is obvious that the springs 45 will thus tend to hold the elevating platform in the position of Fig. 1 relatively to the lifting head.

When the elevating platform is in its lowered position with the lifting wheels 37 off the ground G as in Fig. 1, it is desirable for the truck to have intermediate supporting wheels so that it may be moved about. In the truck of my invention the intermediate supporting wheels are each designated by reference numeral 55, there being

preferably one wheel at each side of the truck. Each wheel 55 is carried on an axle 56, one end of each axle 56 being supported by one of the brackets 25 forming an integral part of the standard 18 of the elevating platform 16, the other end being supported by a bracket 57 also extending from the elevating platform.

Referring now to Fig. 1 the truck there is shown supported by the steering wheel 12 and the intermediate wheels 55. The elevating platform is in its fully lowered position and is maintained in that position by the springs 45. The links 23 in cooperation with rods 39 hold the rear wheel lifting links 35 in position maintaining the lifting wheels 37 off the ground. The truck is therefore very easily moved into position with its load platform between the floors of the pallet P.

Operation of the lifting treadle 14 of pump 13 effects the actuation of the lifting ram assembly 30 to lift the elevating platform through swinging movement thereof on upper links 20 and lower links 23. The disposition of the parts is such that the links 23 will first impel swift movement of the rear wheel lifting links 35 toward the position of Fig. 3. This will of course act to lift the rear end of the elevating platform as the forward end is lifted by the ram of assembly 30. It will also act to lift the intermediate wheels 55 off the ground while continuing the upward movement of the elevating platform at its front and rear ends. The final lifted position of the elevating platform is of course illustrated in Fig. 3. There, the intermediate wheels are off the ground, and lifting wheels 37 are fully down and hold the rear end of the elevating platform fully lifted.

If the release treadle 15 is now depressed, the elevating platform will be lowered under the influence of the load and the springs 45. Lowering movement of the elevating platform will of course effect the lifting of the wheels 37 off the ground and the bringing of the intermediate wheels 55 against the ground as in Fig. 1. I believe that from the brief description herein given, the operation of this modification of my invention will be clearly understood. Naturally, a fuller understanding of the invention will be possible after a reading of the specifications of my earlier applications referred to above, and possibly a reading of the Quayle patent.

In Fig. 5 I show a modification of my invention utilizing substantially the arrangement of the parts illustrated in Figs. 1-4. However, unlike the truck of my first modification, the elevating platform of Fig. 5 extends forwardly relatively to the lifting head so that the connecting links between the lifting head and elevating platform are secured at their forward ends to the elevating platform and at their rear ends to the lifting head. Thus, upper links 60 are pivoted at 61 to the elevating platform and extend rearwardly and are pivoted at 62 to the lifting head. Similarly, the lower links 63, best shown in Fig. 6, are pivoted at their forward ends through shafts 64 to the elevating platform. The links then extend rearwardly and are pivoted through a shaft 65 to the lifting head 66, the lifting head being provided with the sleeve 67 for the passage of the shaft 65.

The rods extending from the rear wheel lifting links 68 are designated by reference numerals 69 and take the place of rods 39 of the first modification. Each of these rods 69 is connected through connecting means 70 to a U shaped member 71 best shown in Fig. 6. The legs 72 of the

U shaped member 71 are through stub shafts 73 secured to the links 63 for actuation by the said links, all as clearly seen in Fig. 6. In the full line position of the parts in Fig. 5, the elevating platform is lowered and the intermediate wheels 55 are against the ground. The lower connecting links 63, through the U member 71 and the rods 69, hold the rear wheel lifting links 68 so that the lifting wheels 37 are maintained spaced from the ground as in the first modification. In the dash and dotted line position of the parts, the elevating platform is shown in its lifted position. The forward end of the platform moves upwardly and rearwardly to the lifted position, with the links 60 and 63 moving as shown to their dash and dotted line positions. The U member 71 is actuated by links 63 and through rods 69 swings the lifting links 68 downwardly, thus lifting the rear end of the elevating platform. Those skilled in the art will of course now fully appreciate the operation of the second modification of my invention.

I now claim:

1. In a lift truck of the class described, a wheel supported lifting head, an elevating platform, connecting links pivotally connecting the forward end of said platform to said lifting head, lifting means for lifting the front end of said elevating platform relatively to said lifting head through swinging movement thereof on said links, intermediate wheels on said elevating platform contacting the ground for supporting said platform when it is in its lowered position relatively to said lifting head, lifting wheel links pivoted to the rear of said elevating platform, lifting wheels on the said lifting wheel links adapted to contact the ground to lift the rear end of said elevating platform as said lifting wheel links swing downwardly relatively to said platform, means of connection so connecting said lifting wheel links and said connecting links that said connecting links hold said lifting wheel links in position to maintain said lifting wheels off the ground and with the plane of the lowermost portions of their peripheries above the plane of corresponding portions of the peripheries of said intermediate wheels when said elevating platform is in its fully lowered position relatively to the ground and said lifting head, the swinging of said connecting links incidental to the lifting of said elevating platform by said lifting means acting through said means of connection to swing the lifting wheel links downwardly to lift the rear of said elevating platform.

2. In a lift truck of the class described, a wheel supported lifting head, an elevating platform, connecting links pivotally connecting the forward end of said platform to said lifting head, lifting means for lifting the front end of said elevating platform relatively to said lifting head through swinging movement thereof on said links, intermediate wheels for supporting said elevating platform for movement on the ground when it is in its fully lowered position relatively to said lifting head, lifting wheel links pivoted to the rear of said elevating platform, lifting wheels on the said lifting wheel links adapted to contact the ground to lift the rear end of said elevating platform as said lifting wheel links swing downwardly relatively to said platform, means of connection so connecting said lifting wheel links and said connecting links that said connecting links hold said lifting wheel links in position to maintain said lifting wheels off the ground and with the plane of the lowermost portions of their peripheries above the plane of corresponding portions of the peripheries of said intermediate wheels when said elevating platform is in its fully lowered position relatively to the ground and said lifting head, the swinging of said connecting links incidental to the lifting of said elevating platform acting through said means of connection to swing the lifting wheel links downwardly to lift the rear of said elevating platform.

3. In a lift truck of the class described, a wheel supported lifting head, an elevating platform, connecting links pivotally connecting the forward end of said platform to said lifting head, lifting means for lifting the front end of said elevating platform relatively to said lifting head through swinging movement thereof on said links, intermediate wheels on said elevating platform contacting the ground for supporting said platform when it is in its lowered position relatively to said lifting head, lifting wheel links pivoted to the rear of said elevating platform, lifting wheels on said lifting wheel links adapted to contact the ground to lift the rear end of said elevating platform as said lifting wheel links swing downwardly relatively to said platform, rods so securing said lifting wheel links and said connecting links that said connecting links hold said lifting wheel links in position to maintain said lifting wheels off the ground and with the plane of the lowermost portions of their peripheries above the plane of corresponding portions of the peripheries of said intermediate wheels when said elevating platform is in its fully lowered position relatively to the ground and said lifting head, the swinging of said connecting links incidental to the lifting of said elevating platform acting through said rods to swing the lifting links downwardly to lift the rear of said elevating platform.

4. In a lift truck of the class described, a lifting head having a vertical standard, an elevating platform having a vertical standard at its forward end, connecting links pivotally connecting the standard of said platform to the vertical standard of said lifting head, lifting means for lifting the front end of said elevating platform relatively to said lifting head through swinging movement thereof on said connecting links, intermediate wheels on said elevating platform contacting the ground for supporting said platform when it is in its lowered position relatively to said lifting head, lifting wheel links pivoted to the rear of said elevating platform, lifting wheels on the said lifting wheel links adapted to contact the ground to lift the rear end of said elevating platform as said lifting wheel links swing downwardly relatively to said platform, means of connection so connecting said lifting wheel links and said connecting links that said connecting links hold said lifting wheel links in position to maintain said lifting wheels off the ground and with the plane of the lowermost portions of their peripheries above the plane of corresponding portions of the peripheries of said intermediate wheels when said elevating platform is in its fully lowered position relatively to the ground and said lifting head, the swinging of said connecting links incidental to the lifting of said elevating platform acting through said means of connection to swing the lifting links downwardly to lift the rear of said elevating platform.

5. In a lift truck of the class described, a wheel supported lifting head having a vertical standard, an elevating platform having a vertical standard at its forward end, connecting links pivotally connecting the standard of said platform

to the vertical standard of said lifting head, lifting means for lifting the front end of said elevating platform relatively to said lifting head through swinging movement thereof on said links, lifting wheel links pivoted to the rear of said elevating platform, lifting wheels on the said lifting wheel links adapted to lift the rear end of said elevating platform as said lifting wheel links swing downwardly relatively to said platform, means of connection so connecting said lifting wheel links and said connecting links that said connecting links hold said lifting wheel links in a retracted position relatively to said elevating platform to maintain said lifting wheels off the ground when said elevating platform is in its fully lowered position, the swinging of said connecting links incidental to the lifting of said elevating platform acting through said means of connection to swing the lifting links downwardly to lift the rear of said elevating platform, and intermediate wheels on said elevating platform having their peripheries below the peripheries of said lifting wheels when said lifting links are retracted relatively to said elevating platform, whereby said intermediate wheels contact the ground to support said platform when it is in its lowered position with said lifting wheels raised off the ground.

6. In a lift truck of the class described, a wheel supported lifting head, an elevating platform, connecting links pivotally connecting the forward end of said platform to said lifting head, lifting means for lifting the front end of said elevating platform relatively to said lifting head through swinging movement thereof on said links, spring means pressing said elevating platform into its fully lowered position relatively to said lifting head, intermediate wheels on said elevating platform contacting the ground for supporting the elevating platform for movement when it is in its fully lowered position relatively to said lifting head, lifting wheel links pivoted to the rear of said elevating platform, lifting wheels on the said lifting wheel links adapted to contact the ground to lift the rear end of said elevating platform as said lifting wheel links swing downwardly relatively to said platform, means of connection so connecting said lifting wheel links and said connecting links whereby said connecting links hold said lifting wheel links in position to maintain said lifting wheels off the ground and with the plane of the lowermost portions of their peripheries above the plane of corresponding portions of the peripheries of said intermediate wheels when said elevating platform is in its fully lowered position relatively to the ground and said lifting head, the swinging of said connecting links incidental to the lifting of said elevating platform acting through said means of connection to swing the lifting wheel links downwardly to lift the rear of said elevating platform.

7. In a lift truck of the class described, a wheel supported lifting head having a vertical standard, an elevating platform having a vertical standard at its forward end, connecting links pivotally connecting the standard of said platform to the vertical standard of said lifting head, lifting means for lifting the front end of said elevating platform relatively to said lifting head through swinging movement thereof on said links, spring means pressing said elevating platform into its fully lowered position relatively to said lifting head, lifting wheel links pivoted to the rear of said elevating platform, lifting wheels on the said lifting wheel links adapted to lift the rear end of said elevating platform as said lifting wheel links swing downwardly relatively to said platform, means of connection so connecting said lifting wheel links and said connecting links that said connecting links hold said lifting wheel links in a retracted position relatively to said elevating platform to maintain said lifting wheels off the ground when said elevating platform is in its fully lowered position relatively to the ground and said lifting head, the swinging of said connecting links incidental to the lifting of said elevating platform acting through said means of connection to swing the lifting links downwardly to lift the rear of said elevating platform, and intermediate wheels on said elevating platform having their peripheries below the peripheries of said lifting wheels when said lifting links are retracted relatively to said elevating platform, whereby said intermediate wheels contact the ground to support said platform when it is in its lowered position with said lifting wheels raised off the ground.

8. In a lift truck of the class described, a wheel supported lifting head, an elevating platform, connecting links pivotally connecting the forward end of said platform to said lifting head, said links being pivoted at their rear ends to the lifting head, and at their forward ends to the elevating platform, lifting means on said lifting head adapted to lift the front end of said elevating platform relatively to said lifting head through swinging movement thereof rearwardly and upwardly on said links, intermediate wheels on said elevating platform contacting the ground for supporting said platform when it is in its lowered position relatively to said lifting head, lifting wheel links pivoted to the rear of said elevating platform, lifting wheels on the said lifting wheel links adapted to contact the ground to lift the rear end of said elevating platform as said lifting wheel links swing downwardly relatively to said platform, rods connecting said lifting wheel links and said connecting links whereby said connecting links hold said lifting wheel links in position to maintain said lifting wheels off the ground and with the plane of the lowermost portions of their peripheries above the plane of corresponding portions of the peripheries of said intermediate wheels when said elevating platform is in its fully lowered position relatively to the ground and said lifting head, the swinging of said connecting links incidental to the lifting of said elevating platform acting through said rods to swing the lifting wheel links downwardly to lift the rear of said elevating platform.

9. In a lift truck of the class described, a lifting head, an elevating platform, connecting links pivotally connecting the forward end of said platform to said lifting head, lifting means adapted to lift the front end of said elevating platform relatively to said lifting head through swinging movement thereof on said links, lifting wheel links pivoted to the rear of said elevating platform, lifting wheels on the said lifting wheel links adapted to lift the rear end of said elevating platform as said lifting wheel links swing downwardly relatively to said platform, means connecting said lifting wheel links and said connecting links so that said connecting links hold said lifting wheel links in a retracted position relatively to said elevating platform to maintain said lifting wheels off the ground when said elevating platform is in its fully lowered position relatively to the ground and said lifting head, the swinging of said connecting links incidental to the lifting of said elevating platform acting

through said means of connection to swing the lifting links downwardly to lift the rear of said elevating platform, and intermediate wheels positioned with their peripheries below said lifting wheels when said lifting links are in said retracted position for supporting said truck when said platform is in its lowered position relatively to said lifting head with said lifting wheels raised off the ground.

10. In a lift truck of the class described, a lifting head, an elevating platform, connecting links pivotally connecting the forward end of said platform to said lifting head, lifting means for lifting the front end of said elevating platform relatively to said lifting head through swinging movement thereof on said links, intermediate wheels on said elevating platform contacting the ground for supporting said platform when it is in its lowered position relatively to said lifting head, lifting wheel links pivoted to the rear of said elevating platform, lifting wheels on the said lifting wheel links adapted to lift the rear end of said elevating platform as said lifting wheel links swing downwardly relatively to said platform, a U member pivoted at each leg of its U form to one of said connecting links, means connecting said lifting wheel links to said U member arranged so that said connecting links through said U member hold said lifting wheel links in a retracted position to maintain said lifting wheels off the ground and with the plane of the lowermost portions of their peripheries above the plane of corresponding portions of the peripheries of said intermediate wheels when said elevating platform is in its fully lowered position relatively to the ground and said lifting head, the swinging of said connecting links incidental to the lifting of said elevating platform acting through said U member and connecting means to swing the lifting wheel links downwardly to lift the rear of said elevating platform.

HERBERT J. FRAMHEIN.

REFERENCES CITED

The following references are of record in the file of this patent:

UNITED STATES PATENTS

Number	Name	Date
2,361,544	Hastings	Oct. 31, 1944
2,358,957	Barrett	Sept. 26, 1944
2,274,164	Quayle	Feb. 24, 1942
2,110,424	Quayle	Mar. 8, 1938