Dec. 31, 1968 R. M. LEVY 3,419,888

ELECTROSTATIC REPRODUCTION SYSTEM

Filed Aug. 5, 1966

Fig. 1

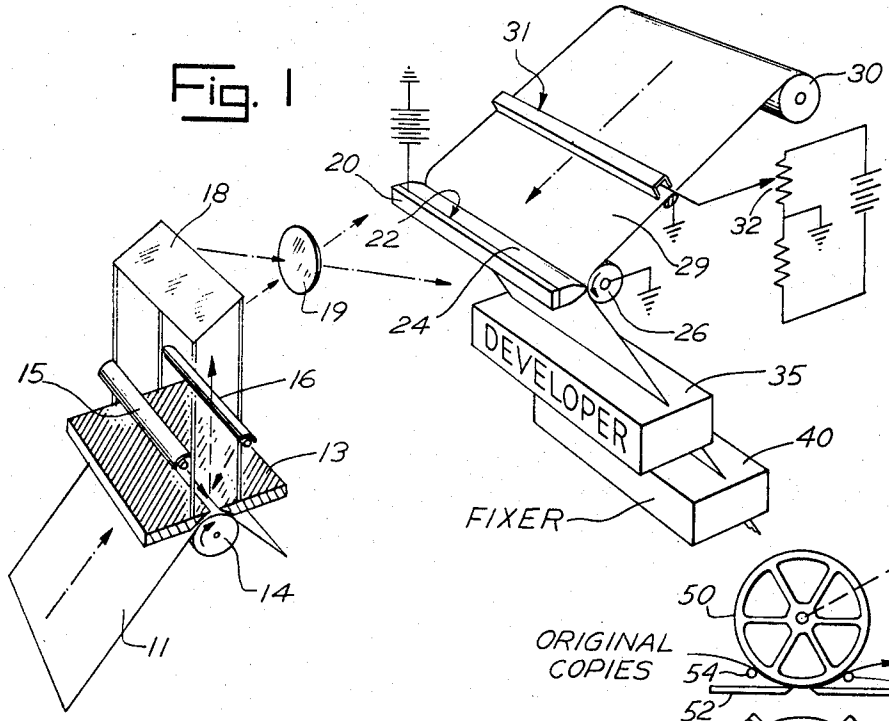

Fig. 2

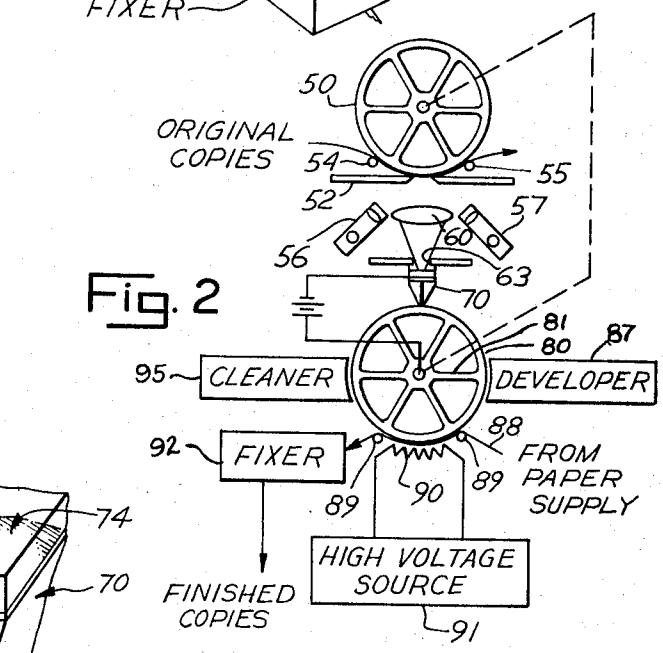

Fig. 3

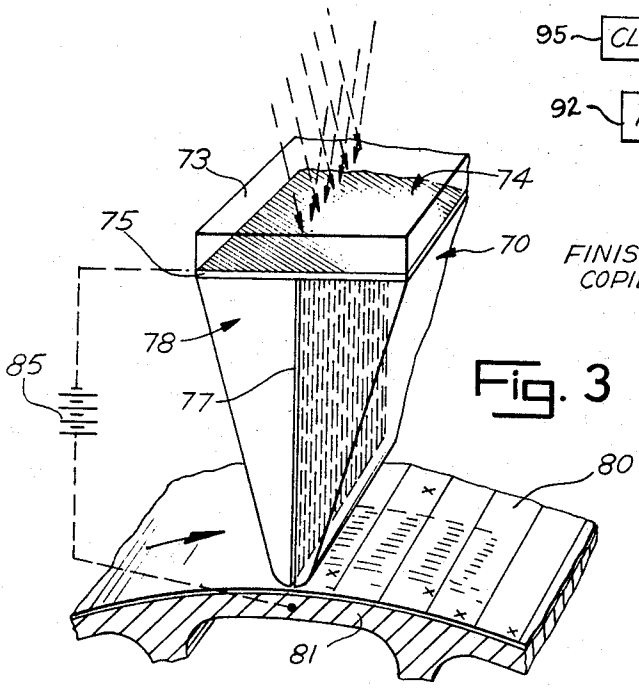

INVENTOR.
ROBERT M. LEVY
BY Bair, Freeman & Molinare
ATTORNEYS

United States Patent Office 3,419,888
Patented Dec. 31, 1968

3,419,888

ELECTROSTATIC REPRODUCTION SYSTEM

Robert M. Levy, Kalamazoo, Mich., assignor, by mesne assignments, to Allied Paper Incorporated, a corporation of Delaware

Filed Aug. 5, 1966, Ser. No. 570,549
3 Claims. (Cl. 346—74)

ABSTRACT OF THE DISCLOSURE

An electrostatic copier suitable for office use. The light image of the original copy to be reproduced is directed by a lens system against a conductive, photocathode surface which is maintained at a negative potential. Those areas of the photocathode surface which are illuminated emit photoelectrons. These liberated electrons are attracted across a narrow gap toward a target made up of a series of closely spaced conductors embedded in an insulating material. The resulting current flow in the target conductors deposits a latent charge image upon a dielectric surface, the charge image being developed by known xerographic techniques.

Background and summary of the invention

This invention relates to an electrostatic printing system and, more particularly, to printing apparatus employing the phenomenon of photoelectric emission for converting an optical image into an elctrical latent image.

In the now well-known xerographic copying process, a charged photo-conductive surface is illuminated with the visible light image to be reproduced. During exposure to the image, those areas of the photo-conductive surface which are illuminated become conductive, dissipating part of the surface charge previously placed on the photoconductive surface. Those areas which were not exposed remain charged and attract pigmentd particles to develop a visible image. In a commercial xerographic process, the pigment particles are attracted to a previously exposed, photoconductive selenium drum from which they are transferred to an ordinary sheet of paper to produce the copy. In another known process, a photoconductive coating (commonly, a resin-bound zinc oxide) is applied to a conductive paper base which serves as the finished print after developing and fixing.

While xerography has proven to be successful commercially, it continues to be burdened by a relatively high degree of complexity and cost. Simple xerographic equipment is incapable of copying continuous tones, halftones and heavy solid areas with the desired quality. While the use of paper coated with a photoconductor somewhat simplifies the process, there are many disadvantages to the final print with its heavy weight of zinc oxide coating. The print tends to discolor when contacted by metals, has relatively poor writing quality, sometimes possesses an undesirable odor, and is expensive. The photoconductive surfaces are delicate, have speed limitations, and are subject to fatique.

It is accordingly a general object of the present invention to provide a simplified and improved electrostatic reproduction system capable of producing excellent overall final prints at high speeds.

It is a further object of the invention to reduce the cost and complexity of electrostatic printing systems.

In U.S. Patent 2,928,973 which issued to R. W. Crews on Mar. 15, 1960, an electrostatic recording system is disclosed wherein the information to be recorded modulates an electron beam directed to a target within a cathode-ray tube. The target is composed of a plurality of conducting pins imbedded in an insulating block. The charge flowing

through the conducting pins is placed on a dielectric paper sandwiched between the cathode-ray tube target and a positively charged mandrel. The latent electrostatic image thus produced on the dielectric paper is developed and fixed in a manner similar to that used in xerographic processes. Although the arrangement shown in the Crews patent is capable of high speed operation, the cost and complexity of the tube and the auxiliary electronic apparatus required prevents the widespread application of this system for simple office copy use.

U.S. Patent 3,137,857 issued to L. J. Kabell on June 16, 1964, discloses an arrangement for translating light images into electrostatic latent images through the use of solid state photodiodes. This system has a limited copy production rate and, because of this extremely large number of diodes required, is also burdened with exceptionally high cost and complexity.

It is, accordingly, a further object of the present invention to reduce the size, cost and complexity of electrostatic reproductive systems in order to provide an arrangement which is suitable for office use and which is capable of producing copies at a rate comparable to repetitive printing and duplicating systems.

The present invention makes use of the well-known photoelectric effect. When certain materials are exposed to light, they emit electrons from the illuminated surface. This light sensitive surface may be termed a photocathode and the emitted electrons called "photoelectrons." When such a photocathode is placed within an evacuated chamber along with a positively charged anode, the magntiude of photoelectric current flowing between the two may be measured. Such measurements show that the number of photoelectrons emitted is directly proportional to the intensity of the incident light. The photoelectric current also increases with increasing potential difference between the anode and the photocathode.

The present invention makes use of the photoelectric effect in a novel arrangement for translating an optical image into an electrostatic charge image. According to a principle feature of the invention, a plurality of mutually insulated conductors are positioned to partially span the distance between a photocathode surface and an anode member such that a first series of gaps are created between the ends of the conductor and the photocathode while a second series of gaps are defined between the other end of these conductors and the anode member. Photoelectrons emitted from the photocathode are captured by the conductors and are carried, facsimile fashion, toward the anode member by means of a suitable voltage source connected between the photocathode and the anode member. The photoelectric current thus generated is then employed to deposit a latent charge image on a recording medium positioned within the second series of gaps.

In a preferred embodiment of the invention, the region encompassing the first series of gaps is evacuated. The photocathode may take the form of a transparent or fiber optic plate provided with a transparent conductive coating, such as stannic oxide, underlying a photoemissive layer of cesium-antimony or the equivalent. This plate forms one portion of the vacuum chamber. An array of small diameter conductive pins or wires arrayed in one or more rows may be embedded in a glass block or other insulating material, this glass block forming a remaining portion of the vacuum chamber.

By employing very close spacing between the conductors and the photoelectron emitting surface, the use of magnetic focusing coils and the like is made unnecessary. However, relatively simple magnetic or electrostatic focusing systems may be employed, if desired, since the necessity of electronic beam scanning is eliminated by the invention. Each conductor captures the electrons emitted

from a given area of the photocathode and conducts the charge in facsimile fashion to produce the electrostatic latent image on a dielectric recording medium sandwiched between the anode member and the array of conductors.

Alternatively, the latent charge image may be put on a dielectric surface film coated on a conductive drum. The resultant electrostatic image may then be developed, transferred to an ordinary sheet of paper, and fixed by a variety of well-known xerographic techniques. The application of the principles of the invention greatly reduces the size, cost and complexity of electrostatic printing systems and is capable of producing high quality prints at high speeds without the use of special light sensitive or electric sensitive papers and without high power consumption.

These and other objects, features and advantages of the present invention may be more clearly understood through a consideration of the following detailed description. In the course of this description, reference will frequently be made to the attached drawings in which:

Brief description of the drawing

FIGURE 1 is a schematic drawing illustrating one application of the principles of the invention;

FIGURE 2 is a schematic illustration of a second application of the principles of the invention;

FIGURE 3 is an enlarged view of the optical-to-electrostatic image transducer according to the present invention employed in the arrangement shown in FIGURES 1 and 2.

Description of the preferred embodiment

In the electrostatic copier shown schematically in FIGURE 1, the original **11** is carried face up between a mask **13** and a drive roller **14**. The face of the original **11** is illuminated by light sources **15** and **16** and the reflected light projected by means of a mirror **18** and lens **19** upon the transparent glass plate indicated generally at **20**. The under surface of the glass plate **20** opposite lens **19** is coated with a photo-sensitive material such as cesium-antimony or its equivalent, as shown at **22**. As will be explained in more detail, the photo-sensitive surface **22** emits photoelectrons when illuminated. These electrons are captured by wirelike conductors embedded within an insulating block **24**. The wire-matrix block **24** is separated from a grounded, conductive roller **26** by a narrow gap. The photo-sensitive surface **22** is maintained at a negative potential with respect to roller **26** by means of voltage source **27**.

Paper **29**, upon which the image is to be reproduced, is provided with a dielectric surface coating and is supplied from a roll **30**. Examples of dielectric coated paper constructions are illustrated in U.S. Patent 3,075,859 to E. B. Ralph et al., U.S. Patent 3,110,621 to T. Doggett et al., and U.S. Patent 3,116,147 to J. J. Uber et al.

The paper **29** may be initially passed through preliminary charger as indicated generally at **31**. Charger **31** serves to establish a uniform electrostatic charge on paper **29**, the charge having a polarity and magnitude which is dependent upon the setting of a potentiometer **32** through which charger **31** is energized. Charger **31** may take the form of the ionization source described in U.S. Patent 3,001,848 to L. E. Walkup or may be a corona emission source of the type described in L. E. Walkup Patent 2,777,957.

After passing through the preliminary charger **31**, the paper web **29** is carried through the gap defined between roller **26** and the wire-matrix block **24** where it receives an electrostatic latent charge image. The paper web **29** then passes through an electroscobic powder developing stage **35** which produces a visible image and through a heat fixing stage indicated schematically at **40**. The invention is not, of course, limited to powder developing techniques. Developing may also be accomplished by forming temporary powder cloud images, through the use of liquid toners, by thermoplastic deformation, and by other developing and fixing techniques known in the art.

Image light reflected from the original being copied travels through transparent plate **20** and strikes the photo-sensitive surface **22**. The surface **22** is conductive and is connected to the negative terminal of source **27** as shown in FIGURE 1. The surface **22** acts as a photocathode, being stimulated to emit photoelectrons by the incident light passing through transparent plate **20**. Once electrons are ejected from the surface **22** into the gap separating the wire-matrix **24** from the surface **22**, they are collected by the individual conductors embedded within matrix **24**.

Only those portions of the dielectric paper **29** which are not exposed to photoelectron flow retain their initial state of charge. Hence, a latent electrostatic charge image is formed upon the dielectric paper **29**, this image being developed by the powder developing stage **35** and rendered permanent by the fixer **40** shown schematically in FIGURE 1.

An alternative arrangement embodying the principles of the invention is shown in FIGURE 2 of the drawing. The original to be copied is passed between a large roller **50** and an illuminated slot in a mask **52**. As shown in FIGURE 2, the original may be guided by auxiliary rollers **54** and **55**. The slot in mask **52** is illuminated by light sources **56** and **57** and the reflected image passed through a lens **60** and a second slot **63** to the optical-to-charge transducer indicated generally at **70**.

As shown in the enlarged view of FIGURE 3, the transducer indicated generally at **70** is essentially identical to the unit described in conjunction with FIGURE 1. Transducer **70** comprises a transparent plate **73** whose under surface is coated with a transparent conductive layer and with a layer of photo-sensitive material at **74**. A narrow gap **75** separates the photo-sensitive surface **74** from a row of parallel conductors **77** embedded in an insulating block **78**. Photoelectrons liberated from the surface **74** pass through the conductors **77** to charge a dielectric coating **80** which covers the outer surface of drum **81**. Surface **74** is conductive and is maintained at a negative potential with respect to the conductive drum **81** by a voltage source **85**.

The gap separating the conductor matrix **77** from the photocathode surface **74** is preferably evacuated. Evacuating the gap adjacent the photo-emissive surface allows very large electrostatic fields to be employed between the photocathode surface **74** and the ends of conductors **77** in order to increase the efficiency of the transducer. The close proximity between the conductors **77** and the photo-emissive surface **74** eliminates any requirement for focusing the "photoelectron image" flowing across the gap. Although the conductors **77** must maintain spaced relation with the photo-sensitive surface **74**, the gap is preferably quite narrow. The permissible gap width is dictated by the angular distribution path of the electron flow and the electrostatic field. The order of magnitude of the gap width is in the neighborhood of less than 100 mils.

The conductor matrix block **78** may be constructed from one or more rows of microminiature metal conductors embedded parallel to each other in glass.

As in the arrangement discussed in conjunction with FIGURE 1, an electrostatic charge image is impressed upon the dielectric surface **80** of drum **81** shown in FIGURE 2. This image may then be developed by a powder developer indicated at **87**. The resultant visual image is then transferred by conventional xerographic means to conventional paper as shown at **88** in FIGURE 2. The paper **88**, guided by rollers **89**, is passed between a wire grid **90** and the coated surface **80** where the image is transferred to the paper **88**. The wire grid **90** is supplied with a high potential from a source **91** and serves to draw the developing powder from drum surface **80** to the paper **88**. A fixer **92** permanently secures the image to the paper **88**. As will be understood by those skilled in the art, a "negative" image is deposited on the drum **80** in the embodiment shown in FIGURE 2. Accordingly, if a positive copy is desired, the developer **87** may employ a negative

toner. Any pigment particle residue which may continue to cling to the surface **80** after pickup adjacent to wire grid **90** may be removed by a cleaner as shown at **95**.

The developing techniques employed to instrument the embodiments shown in FIGURES 1 and 2 are well-known in the art, being essentially identical to those techniques used in conventional electrostatic copiers. The manner in which the image flowing in electron form through the wire-matrix is converted into an electrostatic charge image on dielectric paper or the like is disclosed in greater detail in U.S. Patent 3,001,848 which issued to L. E. Walkup on Sept. 26, 1961.

It is to be understood that the embodiments of the invention which have been described are merely illustrative of two applications of the principles of the invention. Numerous modifications may be made by those skilled in the art without departing from the true spirit and scope of the invention.

What is claimed is:

1. An electrostatic reproduction system of the type including an optical-to-electrostatic image transducer requiring no electron beam deflection means comprising in combination,

(a) an evacuated hollow chamber surrounded by an encapsulating wall, at least a portion of which is transparent,

(b) a conductive electrode member positioned outside of said evacuated hollow chamber adjacent a portion of said encapsulating wall,

(c) a plurality of spaced-apart, mutually insulated conductors, all of said conductors being embedded in and passing through a bounded portion of said encapsulating wall, each of said conductors having an interior end positioned within said chamber and an exterior end positioned outside said chamber, said exterior end being separated from the surface of said conductive electrode member by a narrow gap,

(d) photocathode means comprised of functionally discrete photocathode surface regions, said photocathode means having an overall surface area substantially co-extensive with the area of said bounded portion of the encapsulating wall within which said conductors are embedded,

(e) means for projecting an optical image composed of light and dark areas through said transparent portion of said encapsulating wall to illuminate only selected ones of said photocathode surface regions to produce a photoelectric emission from said selected illuminated regions,

(f) each of said discrete photocathode regions being juxtaposed on the order of 100 mils or less from the interior end of an individual one of said conductors thereby inherently focusing without focusing means the photoelectrons emitted from said illuminated regions onto the interior ends of conductors to which said regions are juxtaposed such that photoelectrons are simultaneously emitted from illuminated photocathode regions in the form of a photoelectron facsimile of said optical image, and current flows simultaneously through all of those conductors which are juxtaposed with an illuminated photocathode region and substantially no current flows through any one of those remaining conductors which are juxtaposed with non-illuminated regions, and

(g) means interposed in said gap between the exterior ends of said conductors and said electrode member for converting said simultaneous current flow into a latent electrostatic charge image.

2. The combination as set forth in claim **1** wherein said last named means comprises a dielectric sheet positioned within said gap such that the current flowing through said conductors produces a latent electrostatic charge image on said dielectric sheet, and further comprising xerographic means for developing said latent charge image into a visible image.

3. The combination as set forth in claim **1**, wherein said conductive electrode member comprises a rotatable drum and said last named means comprises a dielectric coating on said drum, and further comprising means for applying pigmentation to selective portions of said dielectric coating in accordance with the charge stored thereon, a final printing medium, and means for transferring said pigmentation from said dielectric coating to said final printing medium.

References Cited

UNITED STATES PATENTS

2,777,745	1/1957	McNaney	346—74
2,221,776	11/1940	Carlson	250—49.5
2,409,454	10/1946	Thomas.	
2,549,546	4/1951	Thomas.	
2,764,693	9/1956	Jacobs	346—74 X
2,866,903	12/1958	Berchtold	250—49.5
2,883,543	4/1959	Wohl	250—49.5
2,928,973	3/1960	Crews	346—74 X

OTHER REFERENCES

RCA Technical Notes, RCA TN No. 335, November 1959; Scan-Converting Computer Output Printing Tube, M. D. Harsh.

RCA Technical Notes, RCA TN No. 104, May 1958; An Electronic Stylus Tube, Paul W. Kaseman.

BERNARD KONICK, *Primary Examiner.*

L. J. SCHROEDER, *Assistant Examiner.*

U.S. Cl. X.R.

250—211; 178—6.6