United States Patent [19]

Roncan

[11] **3,753,418**

[45] **Aug. 21, 1973**

[54] **COATING APPARATUS WITH FLUID DOCTOR BLADE**

[75] Inventor: **Riccardo Roncan,** Genoa, Italy

[73] Assignee: **Italsider S.p.A.,** Genoa, Italy

[22] Filed: **May 17, 1971**

[21] Appl. No.: **144,186**

[30] **Foreign Application Priority Data**

May 27, 1970 Italy 12711 A/70

[52] **U.S. Cl.** **118/63**

[51] **Int. Cl.** **B65c 11/06**

[58] **Field of Search** ..... 118/63; 117/102 C, 117/102 M

[56] **References Cited**

UNITED STATES PATENTS

1,980,923	11/1934	Lebel	118/63 X
2,139,628	12/1938	Terry	118/63 X
2,390,007	11/1945	Sherman	118/63 X
2,940,418	6/1960	Penrod et al.	118/63
3,607,366	9/1971	Kurokawa	118/63 X

Primary Examiner—Morris Kaplan
Attorney—Nolte and Nolte

[57] **ABSTRACT**

The invention relates to an improved device suitable to adjust continuously the zinc coating on a steel sheet or the like by means of a pair of substantially horizontal headers arranged just above the bath surface on both sides of said metal strip, said headers being provided each with a slotted elongated nozzle consisting of two lips capable of projecting a fluid blade of varying configuration onto the surface of said metal strip.

6 Claims, 2 Drawing Figures

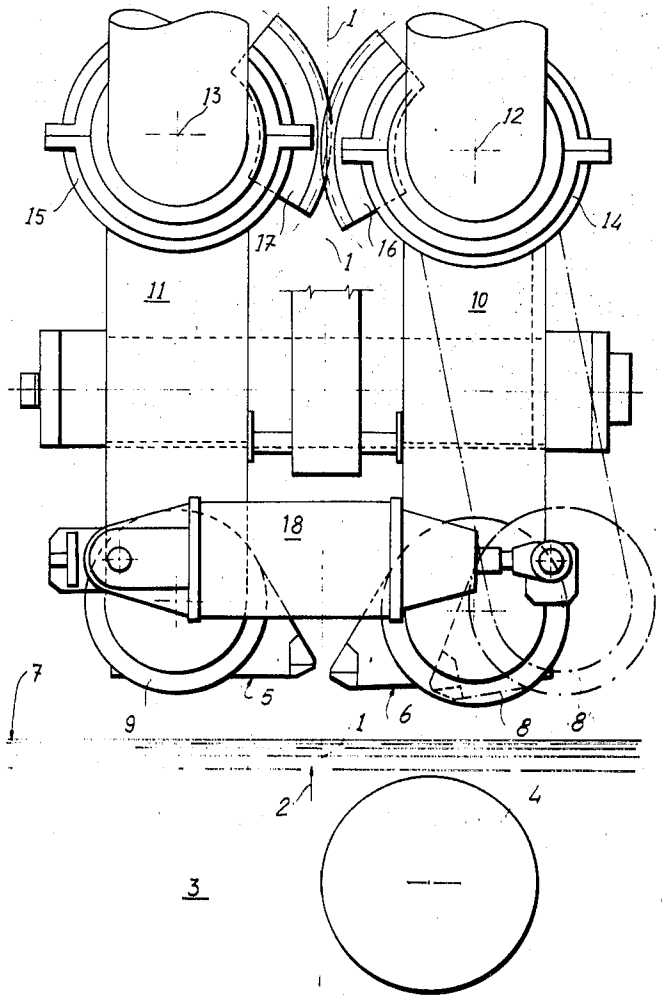

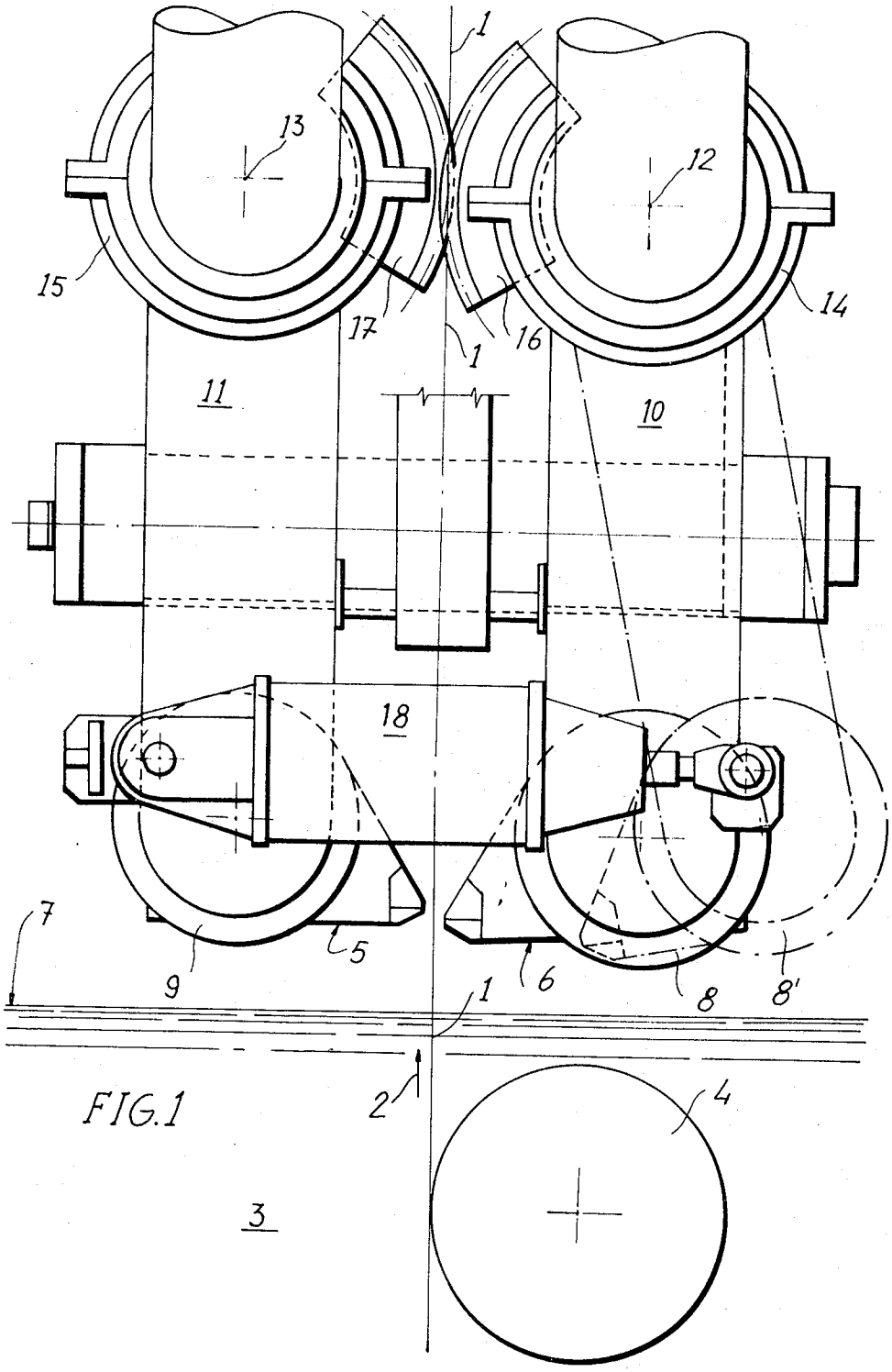

FIG. 1

INVENTOR.
RICCARDO RONCAN

BY

Nolte & Nolte
ATTORNEYS

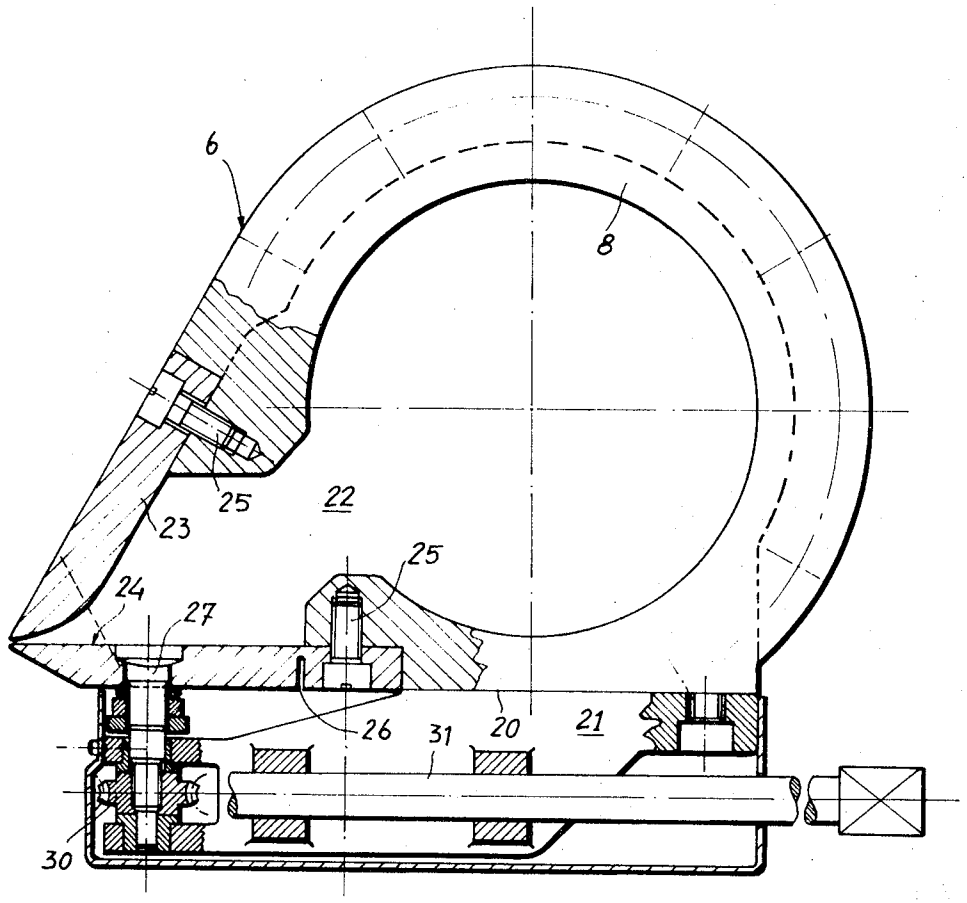

FIG. 2

INVENTOR.
RICCARDO RONCAN

BY

Nolte & Nolte
ATTORNEYS

COATING APPARATUS WITH FLUID DOCTOR BLADE

BACKGROUND OF THE INVENTION

An object of the present invention is to provide an improved device for the adjustment of the zinc coating on a steel sheet or the like during operation of the device.

It is well known that the galvanizing of strips of cold-rolled metal sheets is obtained by moving said sheet through a bath of molten zinc, said bath being maintained at a suitable temperature.

It is however necessary to arrange for adjusting the thickness of said zinc coating, and that according to the known art may be obtained by means of two main methods.

According to the first of said methods, the strip of metal sheet coming from the zinc bath passes between two metal rollers, called galvanizing rollers. By adjusting the speed, the mutual pressure and the passage of said rollers within the bath, it is possible to modify the thickness and thus the weight of said zinc coating.

Such a method has the advantage of galvanizing at a low speed, the thicknesses of the coating being related to the thermal capacity of the furnaces. However, it has the following disadvantages:

a reduced speed for a given range of thicknesses, owing to the difficulty of controlling the coating weight at higher speeds, and that means a decrease in production;

very reduced versatility in production planning,as it is necessary to change from the production of planning, as to narrow strips and from thin to thick strips, according to the roller wear;

superficial defects on the zinc coating caused by the draw slag between the galvanizing rollers;

impossibility of manufacturing strips with coating weights lower than a given value;

high dispersion along any given strip length of the value of the coating weight;

wear of the galvanizing rollers (causing their replacement at least once a week) and consequent stop of production for at least 4 hours;

need of highly experienced operators and a considerable amount of work for the operators.

The second method for adjusting the thickness of the zinc coating comprises two thin fluid blasts (generally consisting of steam or air) at a controlled temperature and pressure, directed on the two surfaces of the metal strip coming from the zinc bath. Such fluid blasts are commonly called air or steam blades or knives.

Such fluid blades, directed onto the surfaces of the strip coming from the zinc bath, blows the excess of zinc drawn by the strip back into the bath. The adjustment of the zinc coating weight is obtained through the control of the following parameters:

a. pressure of the fluid;

b. position of the blades, that is their height over the bath surface, the distance of the relevant nozzles from the metal strip and the slant of said blades with respect to said strip;

c. geometry of the blades, that is their shape and thickness from one end to the other of said metal strip. Such a thickness must be approximately constant at the ends of the metal strip regardless of its width, and further such a thickness must be the smallest at the central part of said strip.

The fluid blade method has the disadvantage that it cannot be used when the strip is run below a given minimum speed. Such a disadvantage however, may be overcome by increasing the capacity of the heating furnaces. On the other hand, said fluid blade method has the following advantages:

increase in the galvanizing speed up to the saturation of the maximum capacity of the furnaces;

saving in the zinc consumption; as a matter of fact, the better uniformity of the zinc coating allows for a reduction in the zinc consumption up to about 10 percent;

higher versatility in production planning which is not restricted by the wear condition of galvanizing rollers;

a remarkable decrease in the superficial defects caused by the slag drawing of the rollers of the first method;

possibility of obtaining strips with coating weights lower than those obtained by the method using galvanizing rollers;

easier and less work for the operator.

However, such a second method for the adjustment of the zinc coating thickness has a disadvantage of technological nature.

Such a disadvantage consists of the difficulty of obtaining in a simple and economic manner nozzles which may be capable of generating fluid blades whose fluid/dynamic characteristics may be the most constant possible from one end to the other of the corresponding blades. One of the method at present used is that of providing such nozzles for the fluid blades in the form of two substantially rectilinear and parallel lips which fed by a header collecting pressure fluid through a set of several conduits distributed along the whole length of said header. Further, in order to obtain fluid blades with constant fluid/dynamic characteristics just upstream of said lips, inside said header are several suitably arranged baffle plates having the function of making uniform the outlet direction of the fluid from said header through said lips.

Such a construction is obviously considerably complex and thus expensive.

A first object of the present invention is to remove such disadvantages.

It is further to be noted that the lips of the nozzles suitable to generate said fluid blades, though being substantially rectilinear and parallel, must however be shaped such that the width of the fluid blade may be slightly narrower at the centre of the metal strip than at the two edges of said strip. It was found that such a difference in thickness of the fluid blade results in a greater quantity of coating at the center of the galvanized strip.

However, the thickness of the fluid blade as between the center and the edges of the galvanized strip must be maintained substantially constant within restricted limits with any variation of the width of the strip to be galvanized. Such a requirement was met, according to the known art, by providing the lips of the nozzles for the fluid blades with a stationary portion and a movable portion, or better a portion replaceable when desired, the latter allowing, according to the width of the strip to be galvanized, to obtain the desired thickness of the fluid blades corresponding to the strip edges.

Such a solution, though very good for operating purposes, proved to be not convenient from the construction point of view, as theorically it requires a pair of in-

terchangeable lips for any width of strip to be coated. Further, it renders considerably heavier the set of nozzles and their construction more complicated.

OBJECT OF THE INVENTION

The object of the present invention is to overcome the above described disadvantages and further to permit to vary as desired the thickness of the fluid blade along the whole length thereof and to thus control the thickness of said fluid blade continuously, i.e., during the operations thereof.

Further advantages of the claimed device will appear on the following description.

SUMMARY OF THE INVENTION

The improved device for the continuous adjustment of the zinc coating on a sheet in form of a strip coming from a bath of molten zinc at controlled temperatured, of the type comprising a pair of substantially horizontal headers arranged just above the bath surface on both sides of said metal strip, said headers being provided each with a elongated slotted nozzle consisting of two lips capable of projecting a fluid blade onto the surface of said strip, is characterized in that at least one of said lips is elastically deformable so as to allow a variations in the outlet port of said nozzle even during its operation and without interfering with the fluid blade, either for the whole length thereof or from point to point thereof as predetermined; and further in that each of said headers has a sufficiently large section, as a function of the pressure of feeding of said fluid blade, and the delivery thereof, as inside said headers the fluid may be in a substantially quiet condition or subject to displacement the speed of which may be negligible with respect to the outlet speed of said fluid blade.

The above device is further characterized in that each of said headers is fed by two conduits and possibly by only one, heading to the ends or end of said header.

Said device is then characterized in that the diameters of said headers is between 100 and 300mm. when the thickness of the port of the slot-like nozzles is between 0.5 mm. and 1.5 mm. approximately, and when the feeding pressure of the fluid is between 600 and 1,800 mm. approximately of H20.

Said device is also characterized in that said header is provided with a large longitudinal opening directed downwards and towards the metal strip, said opening extending, reducing its size to a nozzle, by means of two lips, the upper one, which is stationary has its inner face inclined downwards for about 30°–60°, while the lower one has its inner face substantially horizontal; said upper lip having its inner face related to the bottom, so that its edge may be substantially parallel to the inner face of the lower lip.

Said device is characterized in that said lower lip near its fastened base is provided on its lower face with a narrower portion preferably in form of a slot, said portion being capable of allowing an elastic bending thereof under the action of pulling or pushing means arranged at selected distances under its lower face, so as to be in position to vary as desired said bending along the entire length thereof, and thus so as to be in position to vary as desired the nozzle port (and thus the thickness of the fluid blade) from point to point along its entire length.

Said device is further characterized in that said pulling or pushing means of said lower lip of the nozzle consist of sapced pins, projecting under the lower lip; the lower end of said pins being connected to axial positioning means singularly remote controlled by means of suitable back means.

Said device is then characterized in that it comprises angular positioning means for the two slot-like nozzles. Said device is still characterized in that it comprises horizontal positioning means capable of moving farther from and closer respectively to said metal strip the two slot-like nozzles.

Said device is also characterized in that said headers hang each by means of a pair of feeding conduits heading to the two ends of said headers; said feeding conduits being further preferably jointed each about a horizontal axis which is parallel to the corresponding slot-like nozzle.

Said device is still characterized in that the inner nozzle, that is the nozzle feeding the fluid blade onto the metal strip face against which is compressed a stabilizing roller immersed in the bath, is slightly upward-positioned with respect to the other slot-like nozzle.

Said device is finally characterized in that said inner nozzle in its lowest position directs the corresponding fluid blade according to a plane substantially perpendicular to the metal strip; the fluid blade of the other slot-like nozzle being inclined downwards for about 10°.

BRIEF DESCRIPTION OF THE DRAWINGS

In order that the invention may be clearly understood, embodiments selected by way of example only will now be described with particular reference to the accompanying drawings, wherein:

FIG. 1 is a side view according to a vertical plane perpendicular to the fluid blade plane, of a device according to the invention; and

FIG. 2 is a sectional view of a detail of FIG. 1, that is a sectional view of the nozzle suitable to provide the fluid blade according to the invention.

DESCRIPTION OF THE PREFERRED EMBODIMENT

With reference to the drawings, numeral 1 is a metal strip stretched between two guide rollers not shown, drawn to the direction of arrow 2 and coming from a molten zinc bath 3 which is maintained at a suitable temperature. Numeral 4 is a stabilizing roller having the object of positioning exactly the lying plane of the metal strip 1 mainly with respect to the nozzles 5 and 6 generating the fluid blades and arranged just above a surface 7 of bath 3, at a distance which should be between 150 and 500mm.; the minimum values of such a gap are easily obtainable by the claimed nozzle, as it will appear herebelow, while it is very difficult to obtain them by means of conventional devices. Said nozzles 5 and 6 are fed by back headers, 8 and 9 respectively, which mainly consists of two preferably circular conduits the diameter of which is large in comparison to the thickness of the fluid blades. Said headers are fed only through two conduits 10 and 11 which are pivoted about horizontal and transversal axes 12 and 13 by means of suitable sealing joints 14 and 15 which are turnable. Said two joints are provided with two toothed sections 16 and 17 engaging each other, so that a rotation of the conduit portion 10 is always accompanied by a contrary and equal rotation of conduit 11 and viceversa. The rotation of conduits 10 and 11, which

obviously accompanies a relative movement of nozzles 5 and 6 to or from each other and the metal strip 1, is caused by a pair of double-action jackes 18 arranged at the two ends of headers 8 and 9 or directly connected to the outer surfaces of conduits 10 and 11 which have the function too of supporting on both sides headers 8 and 9. By a dashed-line, with 8', is shown header 8 in a lateral tilted position. Besides pushing nozzles 5 and 6 away from the metal strip 1 and to a non-operative position, jack 18 has further the object of allowing to vary the distance of nozzles 5 and 6 from said metal strip 1 and to vary accordingly the angle between the fluid blades and said metal strip 1.

As shown in FIG. 1 according to a preferred embodiment, said two fluid blades are arranged slightly staggered in height, i.e. the inner nozzle 5 is in a slightly higher position than the outer nozzle 6. By inner nozzle is meant the one projecting its fluid blade on the face of said metal strip 1 which is not in contact with the adjusting roller 4.

According to the preferred embodiment shown in FIG. 1, while the inner nozzle 5 is, in its lowest position, substantially perpendicular to said metal strip 1, the outer nozzle 6 is more inclined towards the bottom for about 10°. Such a difference in inclination obviously remains when both nozzles are rotated outwards for adjusting their distance from said metal strip 1.

With reference to FIG. 2, which shows enlarged only nozzle 6 as nozzle 5 is constructed in the same manner, said nozzle 6 comprises a cylindric header 8 which at the outer and lower part has a flattened surface 20 substantially horizontal which is suitable to provide support for brackets 21 for the means controlling the opening of said nozzle along the entire length of its.

In a direction inclined downwards for about 45°, header 8 has a large longitudinal port 22 on the edges of which are fastened an upper lip 23 and a lower one 24, e.g. by means of screws 25. While the position of the upper lip 23 is stationary, said lower lip 24 may be inclined downwards elastically, as it has a longitudinal groove 26 on its fastening base and on its outer face. Said lip 24 is passed through by suitably spaced pins 27, arranged e.g. each 10 cm., the head of which is housed is suitable bores, so as not to project from the upper face of lip 24. The lower end of pins 27 may be drawn downwards for distances selected and fifferent from pin to pin, so that the thickness of the fluid blade coming from nozzle 6 may be adjusted as desired for its entire length.

It is therefore possible, regardless of the width of said strip 1, to arrange so that the thickness of the fluid blade, correspondingly to the center and edges of said strip, may have the desired values. And moreover the thickness of said fluid blade, along the width of said strip 1, may be varied from a minimum value at the enter of said strip to a maximum value at the edges of same, with a linear, parabolic, circular behaviour and in any other way considered suitable.

It is important to appreciate that according to the invention, that thickness of said fluid blade may be varied on each point too, even during the device operation, which is not possible by conventional devices. Further, the adjusting means for the distance between said lips, in this case pins 27, never interfere with the fluid blades.

In the embodiment shown in FIG. 2, the end of pin 27 is supported in a turnable and axially slidable way by bushes fastened at the end of bracket 21. A portion of said pin is further threaded and on same is screwed a turnable but axially stationary wheel 30 which is provided outside with a helical toothing engaging a second wheel arranged at 90°, not shown, and rotated by a shaft 31 which is remote controlled, even during the device operation.

Obviously, the downward displacement of pin 27 may be obtained mechanically in any other similarly suitable way. It is important that the diameter of said header 8 may be large with respect to the thickness of the fluid blade. In practice, it is advisable that said diameter may be selected between 100 and 300mm. However, the choice of said diameter must be made as a function of the feeding pressure of the fluid, the thickness of the fluid blade and mainly the delivery thereof, so that the fluid under pressure contained inside said header 8 may be practically stationary. In such a way, the fluid blade will have the same orientation along its whole length and any turbulence will be avoided near the nozzle opening as well as any different fluid/dynamic behaviour of said fluid blade along its length. In other words, the size of said header 8 must be so large as to allow same to act as a lung.

In such a way, it is sufficient that the fluid is fed only by the two ends of header 8, and even from only one of them, without any variation of pressure inside said header 8.

It is further to be appreciated that the upper lip 23 is to be inclined downwards for about 45° and its inner face is to be connected so as to be tangent, correspondingly to its lower end, to the inner face of the lower lip 24 whose lying position defines the lying plane of said fluid blade.

The following are the operating parameters according to a preferred embodiment of the invention:

fluid pressure — 600–1,800 mm H20
height of the fluid blades on the bath — 150–500 mm
distance between the blades and the strip — 12–18 mm
thickness of the fluid blades — 0,5–1,5 mm
inclination with respect to the strip:
outer fluid blade — about 80°
inner fluid blade — about 90°

It is further to be appreciated that air at room temperature was used as a fluid.

It is to be understood that the invention is not limited to the embodiment shown. It is intended to cover all modifications and equivalents within the scope of the appended claims.

What we claim is:

1. An improved device for the continuous adjustment of the zinc coating on a metal strip coming from a molten zinc bath at controlled temperature, of the type comprising a pair of horizontal manifolds arranged for positioning just above the bath surface on both sides of the metal strip, said manifolds each comprising an elongated nozzle, each of said manifolds being supported by a pair of pivotally mounted feed conduits which communicate with the ends of said each manifold, means to simultaneously adjust the pair of nozzles with respect to angular relationships and the distance therebetween, each said nozzle comprising a pair of elongated lip members defining therebetween slot means for directing a stream of gases from said elongated nozzle to impinge on the sides of the metal strip wherein the lower lip, near its base, is fastened to said manifold and is pro-

vided on its lower face with a slot parallel to said elongated nozzle, characterized in that said lower lip comprises deformable means for varying the longitudinal profile of said slot means, a plurality of pulling and pushing means for deforming said deformable means arranged at selected distances under said lower face in said parallel slot and a plurality of remote control means singularly acting on said pulling and pushing means, and connecting means between said remote control means and said pulling and pushing means.

2. A device as claimed in claim **1**, wherein the diameter of each of said manifolds is between 100 and 300 mm, when the thickness of the port of the slot-like nozzle is between 0.5 and 1.5 mm, and when the feeding pressure of the fluid is between 600 and 1,800 mm of H_2O.

3. A device as claimed in claim **1**, wherein said manifolds are provided with a large longitudinal opening for directing the stream of gases downwards and towards the metal strip, said opening extending, reducing its size nozzle-like, by means of two sheet-like lips, the upper one, which is stationary, has its inner face inclined downwards at about 30°–60°, while the lower one has its inner face substantially horizontal; said upper lip having its inner face suitably rounded so that its lower edge is parallel to the inner face of said lower lip.

4. A device as claimed in claim **1**, wherein said pulling and pushing means of said lower lip of the nozzle consist of spaced pins projecting under the lower lip; the lower ends of said pins being connected to said remote control means by said connection means.

5. A device as claimed in claim **1**, wherein said nozzles comprise inner and outer nozzles, the inner nozzle feeding its respective fluid blade onto the metal strip face opposite that against which is compressed a stabilizing roller immersed in the bath, said inner nozzle being in a slightly upper position with respect to the other nozzle.

6. A device as claimed in claim **5**, wherein said inner nozzle in its lowest position directs the corresponding fluid blade according to a plane substantially perpendicular to said metal strip; the fluid blade of the other nozzle being inclined downwards at about 10°.

* * * * *