Nov. 13, 1934. F. M. SPERLING 1,980,300

COPYHOLDER

Filed March 7, 1934 4 Sheets-Sheet 1

Fig. 1.

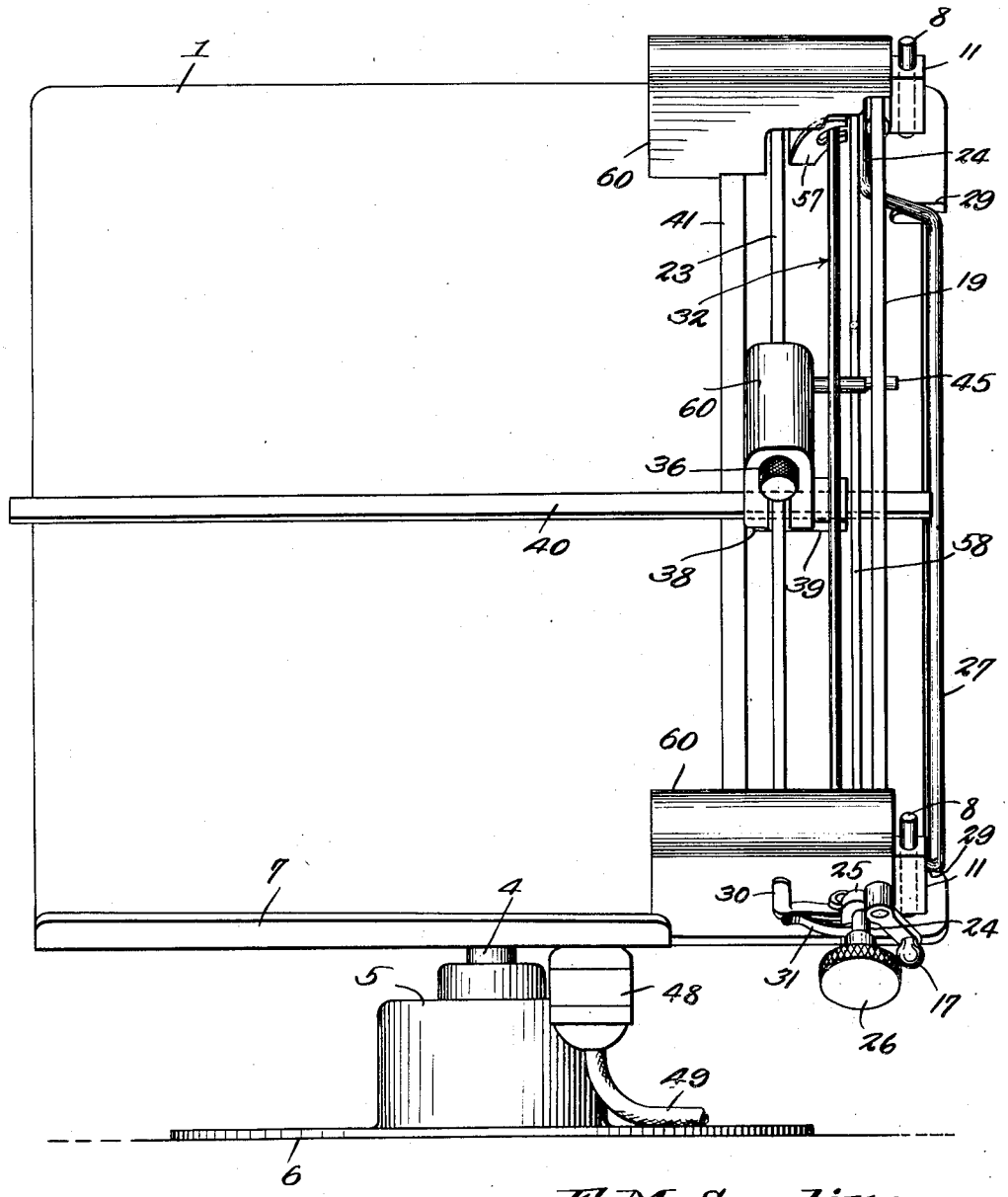

F. M. Sperling
Inventor

By C. A. Snow & Co.
Attorneys.

Nov. 13, 1934. F. M. SPERLING 1,980,300

COPYHOLDER

Filed March 7, 1934 4 Sheets-Sheet 2

Fig. 2.

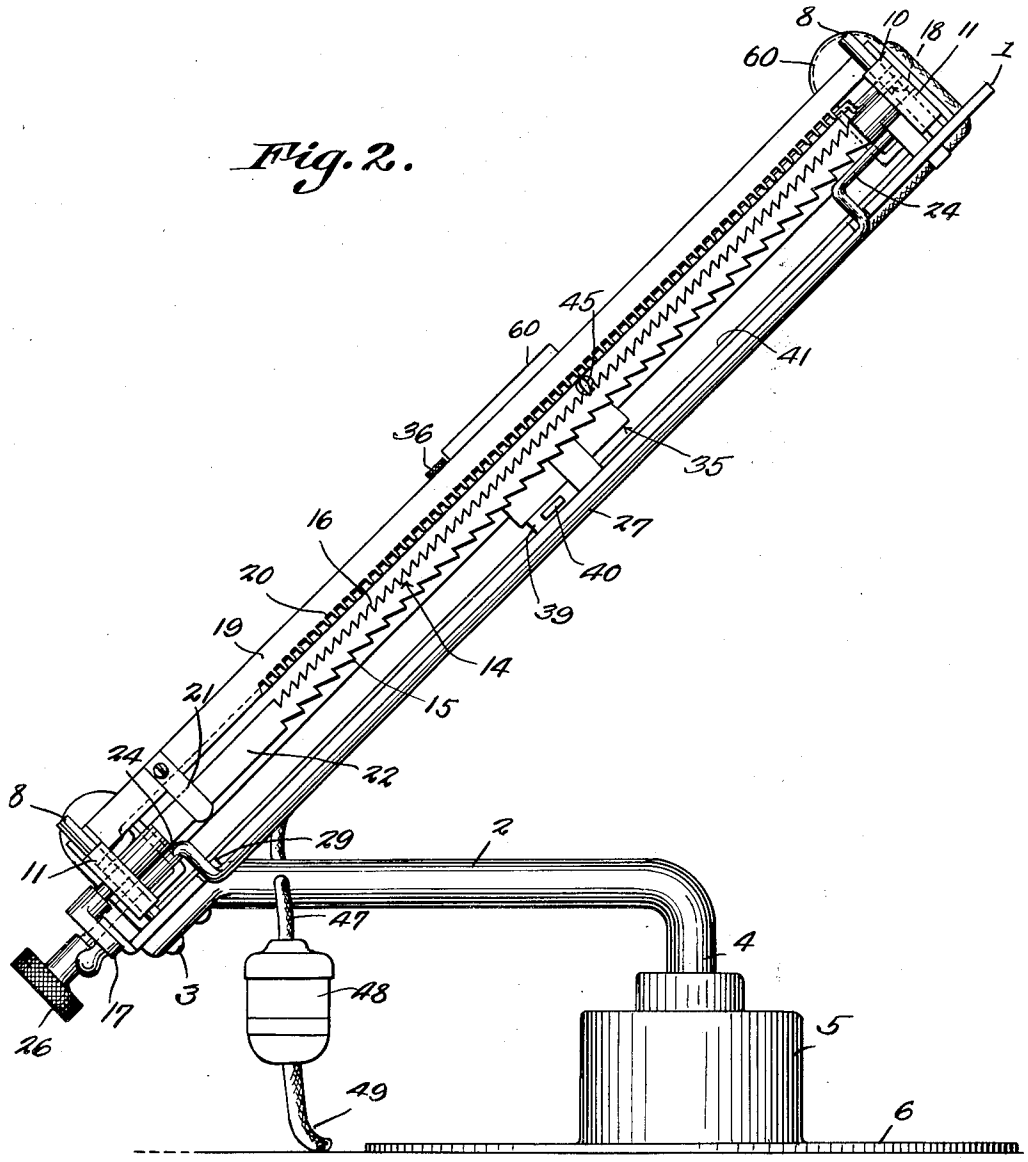

F. M. Sperling
Inventor

By C. A. Snow & Co.
Attorneys.

Nov. 13, 1934. F. M. SPERLING 1,980,300

COPYHOLDER

Filed March 7, 1934 4 Sheets-Sheet 3

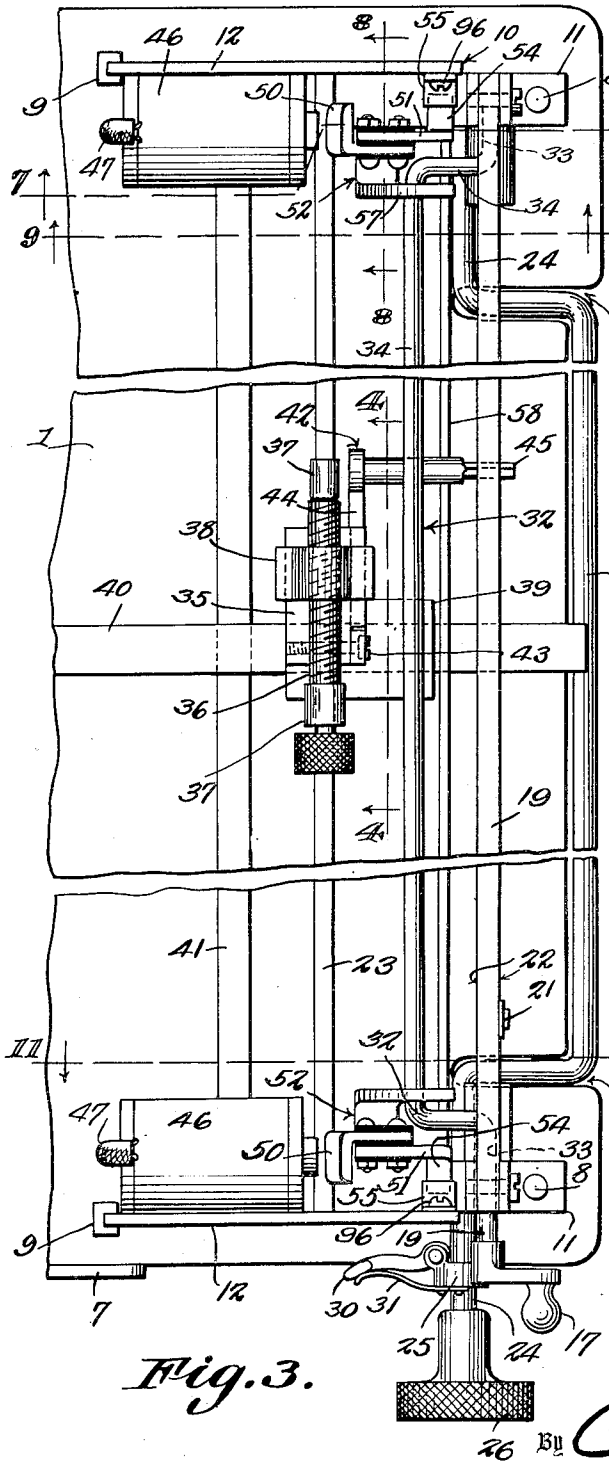

Fig. 3.

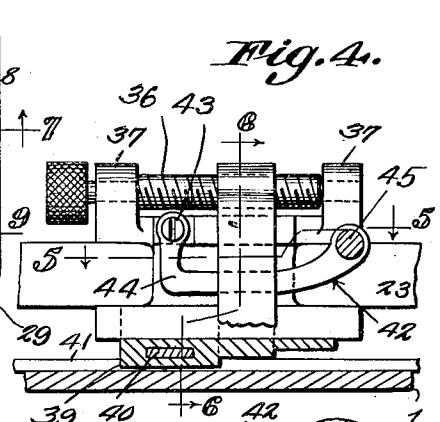

Fig. 4.

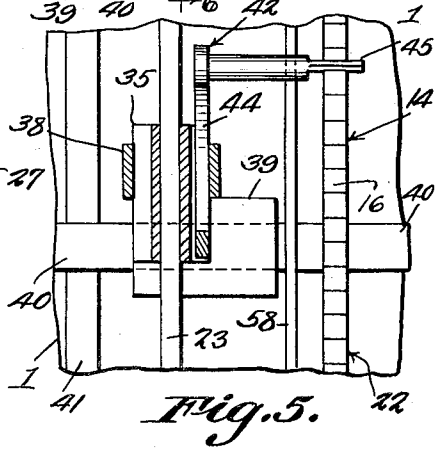

Fig. 5.

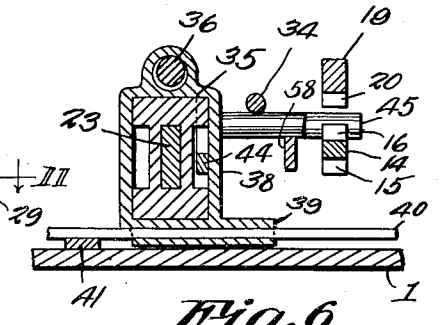

Fig. 6.

F. M. Sperling
Inventor

By Cashow & Co.
Attorneys.

Nov. 13, 1934. F. M. SPERLING 1,980,300

COPYHOLDER

Filed March 7, 1934 4 Sheets-Sheet 4

Fig. 7.

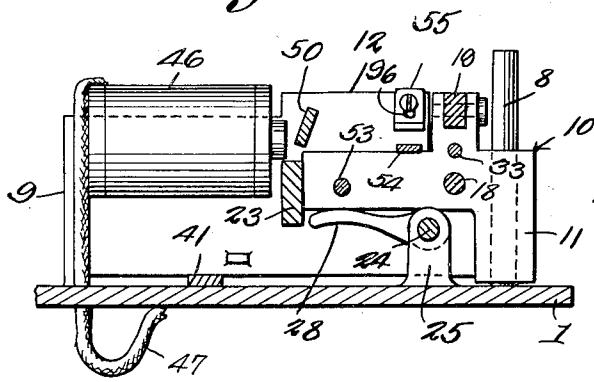

Fig. 8.

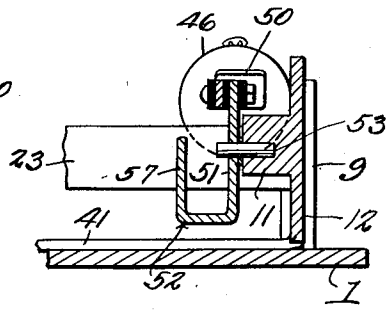

Fig. 9.

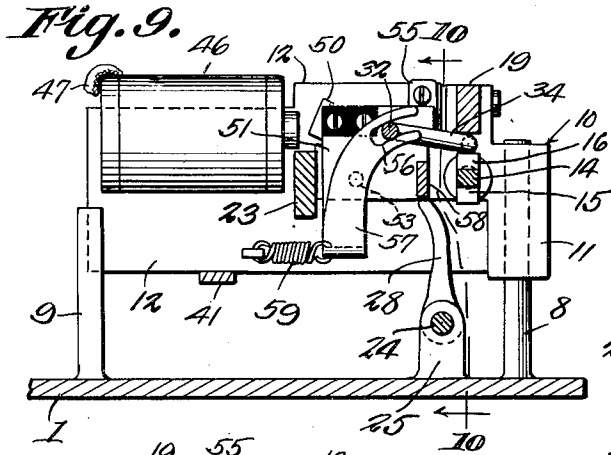

Fig. 10.

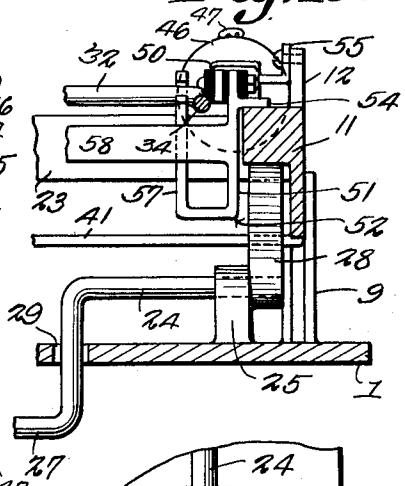

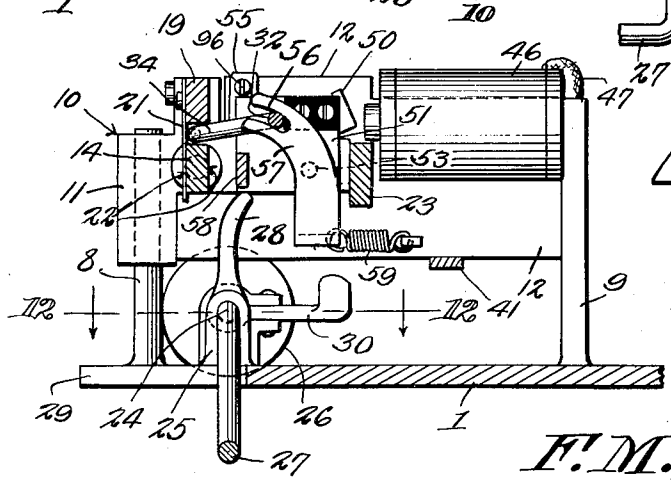

Fig. 11.

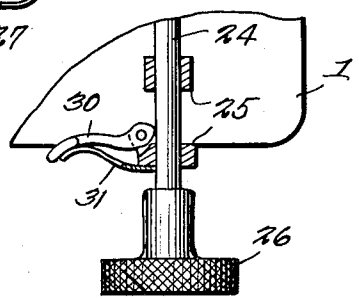

Fig. 12.

F. M. Sperling

Inventor

By Cushman & Co.

Attorneys.

Patented Nov. 13, 1934 1,980,300

UNITED STATES PATENT OFFICE

1,980,300

COPYHOLDER

Frank M. Sperling, Bristol, Pa.

Application March 7, 1934, Serial No. 714,495

6 Claims. (Cl. 120—34)

The device forming the subject matter of this application is a copyholder of that general type shown in my prior Patents Nos. 1,881,102, 1,881,103, and 1,919,399, issued respectively on October 4, 1932, October 4, 1932, and July 25, 1933.

The present invention has for its objects, the mounting of the vertically-movable frame, which carries the line-finder, on the table of the machine, rather than on a laterally-adjustable carriage, the provision of novel means for raising and lowering the frame at the will of an operator to permit the removal and insertion of the material to be copied, improvements in the means for adjusting the line-finder on the slide, and other improvements which will appear as the description proceeds.

It is within the province of the disclosure to improve generally and to enhance the utility of devices of that type to which the invention appertains.

With the above and other objects in view, which will appear as the description proceeds, the invention resides in the combination and arrangement of parts and in the details of construction hereinafter described and claimed, it being understood that changes in the precise embodiment of the invention herein disclosed, may be made within the scope of what is claimed, without departing from the spirit of the invention.

In the drawings:

Fig. 1 shows, in front elevation, a device constructed in accordance with the invention;

Fig. 2 is a side elevation;

Fig. 3 is a front elevation, parts being broken away;

Fig. 4 is a section on the line 4—4 of Fig. 3;

Fig. 5 is a section on the line 5—5 of Fig. 4;

Fig. 6 is a section on the line 6—6 of Fig. 4;

Fig. 7 is a section on the line 7—7 of Fig. 3;

Fig. 8 is a section taken approximately on the line 8—8 of Fig. 3;

Fig. 9 is a section on the line 9—9 of Fig. 3;

Fig. 10 is a section on the line 10—10 of Fig. 9;

Fig. 11 is a section on the line 11—11 of Fig. 3;

Fig. 12 is a section on the line 12—12 of Fig. 11.

The copyholder which forms the subject matter of this application comprises a substantially flat table 1 (Fig. 1) which may be placed as desired. By preference, however, as shown in Fig. 2, the table 1 has a backward slant. Any suitable means may be provided for supporting the table 1. If desired, a horizontal bracket 2 may be provided, one end of the bracket being secured at 3 to the lower part of the table 1, the bracket comprising a depending spindle 4 journaled in a bearing 5 attached to a supporting base 6, or formed integrally therewith, it being possible, thus, to swing the table 1 to any desired position about a vertical axis represented by the spindle 4 of the bracket 2. The matter to be copied is supported on the table 1 by an outstanding shelf 7 on the lower edge of the table.

Near to its right hand edge in Figs. 1 and 3, the table 1 carries posts 8. The table 1 carries trough-shaped guides 9 (Fig. 3), disposed inwardly with respect to the posts 8. The device comprises a vertically adjustable frame 10, including blocks 11 mounted for vertical movement on the posts 8, the blocks having plate-like extensions 12 which are vertically slidable in the guides 9. In Fig. 2, the numeral 14 designates a first rack bar. Upon one edge, the rack bar 14 has a rack 15, the teeth of which are spaced widely enough apart to enable the said rack bar to be used in connection with typewritten matter that is double spaced. On the opposite edge of the bar 14 there is a rack 16, the teeth of which are separated less widely than are the teeth of the rack 15, for single spaced work.

In order that the bar 14 may be turned on its axis, to present either the rack 15 or the rack 16 uppermost, and in operative position, the lower end of the bar 14 is supplied with a crank 17. The ends of the rack bar 14 are cylindrical, and are journaled at 18 (Fig. 7) in the blocks 11 of the vertically adjustable frame 10. Directly above the rack bar 14 is disposed a second rack bar 19 having rectangularly disposed, downwardly-extended teeth 20 on its lower edge, the teeth 20 alternating with the teeth of the racks 15 and 16 of the bar 14, depending upon whether the rack 15 or the rack 16 is disposed uppermost, and in operative position. The second rack bar 19 does not turn on its axis, but is secured to the blocks 11 of the vertically adjustable frame 10, as shown, for instance, in Figs. 7 and 3. The second rack bar 19 carries a depending spring finger 21, shown in Fig. 2 and adapted to bear against the oppositely-disposed flat sides 22 of the first rack bar 14, to hold either the rack 16 or the rack 15 uppermost. A guide bar 23 is provided, and has its ends secured to the blocks 11 of the vertically adjustable frame 10, as shown in Figs. 7, 8 and 9, the guide bar 23 being disposed parallel to the rack bar 14 and the rack bar 19.

A means is provided for raising and lowering the vertically adjustable frame 10, and with this

consideration in mind, a shaft 24 is mounted to turn in bearings 25 carried by the table 1, near to the upper and lower edges of the table, the lower bearings being shown in detail in Fig. 12. The shaft 24 is rotated at the will of an operator, through the instrumentality of a knob 26 or the like, secured to the lower end of the shaft. The shaft 24 has an intermediate offset portion 27, the purpose of which will be made manifest hereinafter. Near to its ends, the shaft 24 carries lifting arms 28 (Figs. 7, 9 and 11) which, operating beneath the blocks 11 of the vertically adjustable frame 10, serve to raise and lower the frame when the shaft 24 is turned by means of the knob 26. The offset portion 27 of the shaft 24 is adapted to be received in notches 29, formed in one edge of the table 1 (Fig. 1).

In order to hold the shaft 24 in any position to which it has been rotated, and in order to hold the vertically adjustable frame 10 in any position to which it has been lifted, the cam latch 30 of Figs. 3, 11 and 12 is provided, the latch 30 being fulcrumed on the lower one of the bearings 25. The inner end of the cam latch engages the shaft 24 (Fig. 12) under the impulse of a spring 31, secured to the said lower bearing 25 and pressing against the cam latch 30. In Fig. 3, the numeral 32 designates a retainer, in the form of a shaft, having its ends 33 (Fig. 7) journaled in the upper and lower bearings 25 on the table 1. The retainer 32 comprises an offset crank portion 34, clearly shown in Figs. 3 and 9.

A slide 35 (Figs. 6 and 3) is mounted for step by step movement along the guide bar 23. An adjusting screw 36 is journaled in upstanding lugs 37 at the ends of the slide. About the slide 35 is disposed a yoke 38 having an offset 39 at one side. The intermediate portion of the screw 36 is threaded into the top of the yoke 38, and thus, by turning the screw, the yoke may be shifted lengthwise of the slide and lengthwise of the guide bar 23. A transverse line finder 40 has endwise sliding adjustment in the bottom part of the yoke 38 and in its offset 39, as Fig. 6 will show. The offset portion 27 of the shaft 24 is to permit the shaft to clear the line finder 40. The line finder 40 extends across a paper holder 41, in the form of a strip, extending downwardly along the table 1 and having its ends secured to the plates 12 which form parts of the vertically adjustable frame 10. A pawl 42 (Fig. 5) is provided, and the pawl 42 comprises an arm 44 pivoted at 43 (Fig. 4) to the yoke 38. The arm 44 carries a laterally projecting thinned finger 45. This finger 45 extends underneath the crank portion 34 of the retainer 32 and is adapted to work between the rack 16 of the bar 14 and the teeth 20 of the fixed upper rack 19.

Electromagnets 46 are secured to the plates 12 of the vertically adjustable frame 10. The conductors 47 (Fig. 2) for the electromagnets 46 extend downwardly through the table 1, through the bracket 2 and are united by a coupling 48 with conductors 49, which will be alluded to hereinafter.

Armatures 50 are responsive to the electromagnets 46, and they are carried by the outer arms 51 of U-shaped levers 52 (Fig. 10), the outer arms 51 of the levers 52 being fulcrumed at 53 on the blocks 11 of the vertically adjustable frame 10. The outer arms 51 of the levers 52 carry lateral projections 54, adapted to engage the blocks 11 of the vertically adjustable frame 10, as shown in Fig. 7, to limit the swinging movement of the armatures 50 away from the electromagnets 46. As the armatures 50 swing toward the electromagnets 46, their movement in that direction is limited by the engagement between the projections 54 and stops 55, which are adjustably mounted at 96 (Fig. 11) on the plates 12 of the frame 10. The outer arms 51 of the U-shaped levers 52 of Fig. 10 have elongated slots 56 (Fig. 9) in which the crank portion 34 of the retainer 32 is slidably received. The inner arms of the levers 52 are marked by the numeral 57 and are connected by a releasing member 58, which extends under the finger 45 of the pawl 42. Pull springs 59 (Fig. 9) are connected to the lower ends of the levers 52 and to the plates 12 of the vertically adjustable frame 10 and tend to swing the armatures 50 away from the electromagnets 46. Covers 60 (Fig. 1) may be used wherever desired, to house any of the working parts.

Any suitable switch mechanism (not shown) may be associated with the conductors 49 of Fig. 2, to permit the electro-magnets 46 to be energized and de-energized.

By means of the knob 26, the shaft 24 is rotated, and the arms 28 on the shaft raise the frame 10, the frame moving upwardly on the posts 8 and the guides 9. The material to be copied is placed on the table 1 and is supported at its lower edge by the shelf 7. A reverse rotation of the shaft 24 lowers the frame 10, and the material to be copied is held on the table 1, underneath the paperholder 41. The screw 36 is rotated and because the screw is threaded into the yoke 38, the yoke and the line-finder 40 are adjusted lengthwise of the table 1, until the line-finder 40 is in proper place, beneath the first line of the material on the table 1 which is to be copied.

When the electromagnets 46 are energized, the electromagnets attract the armatures 50, and swing the levers 52 on their fulcra 53, the releasing member 58 being raised, and the crank portion 34 of the retainer 32 being swung upwardly. The releasing member 58 raises the finger 45, the arm 44 swinging upwardly on its pivotal connection 43. When the finger 45 is raised, it moves out of engagement with the rack 16 of the rack bar 14, and into engagement with the teeth 20 of the rack bar 19, the finger 45 dropping into engagement with the next tooth of the rack 16, and the slide 35 and the line-finder 40 moving down one step, when the magnets 46 are de-energized, as in my Patent No. 1,881,103, hereinbefore alluded to, the line-finder 40 having a step-by-step progression downwardly along the copy on the table 1. The rack bar 14 can be reversed on its axis, by means of the crank 17, to dispose the rack 15 uppermost and in operative position, if double spacing is desired. The member 32 is called a retainer because its crank portion 34 extends across the finger 45 and tends to keep the finger releasably engaged with the rack 16 of the bar 14, or with the rack 15 of the said bar, if the rack 15 happens to be the one that is uppermost, and in use.

The pawl 42 of Fig. 4 may be moved upwardly and downwardly by hand, thereby disengaging and engaging the finger 45 with the rack 16, for instance. This enables the slide 35 of Fig. 3 to be moved rapidly upwardly or downwardly along the guide bar 23, the line-finder 40 being disposed at the desired place on the manuscript that is supported on the table 1.

What is claimed is:

1. In a device of the class described, a table, means for supporting the table, a guiding means

secured directly to the table, in spaced relation to the supporting means and extended upwardly from the table, a frame vertically movable on the guiding means, mechanism supported by the table and under the control of an operator and operatively engaged with the frame to raise and lower the frame on the guiding means and with respect to the table, a line-finder cooperating with the table, and means for mounting the line-finder on the frame for movement longitudinally of the frame and of the table.

2. In a device of the class described, a table, means for supporting the table, a guiding means secured directly to the table, in spaced relation to the supporting means and extended upwardly from the table, a frame vertically movable on the guiding means, a line-finder cooperating with the table, means for mounting the line-finder on the frame for movement longitudinally of the frame and of the table, and mechanism under the control of an operator for raising and lowering the frame on the guiding means and with respect to the table, said mechanism comprising a shaft, means for mounting the shaft for rotation on the table, and means for operatively connecting the shaft with the frame to raise and lower the frame.

3. In a device of the class described, a table, a guiding means secured directly to the table, a frame vertically movable on the guiding means, a line-finder cooperating with the table, means for mounting the line-finder on the frame for movement longitudinally of the frame and of the table, and mechanism under the control of an operator for raising and lowering the frame on the guiding means and with respect to the table, said mechanism comprising a shaft, means for mounting the shaft for rotation on the table, and a lifting arm carried by the shaft and engaged with the frame to raise and lower the frame.

4. In a device of the class described, a table, a guide extended along the table, a slide mounted to reciprocate on the guide, a yoke slidable for adjustment upon the slide, a line-finder carried by the yoke, and means for adjusting the yoke longitudinally of the slide, said means comprising a screw threaded into the yoke and held for rotation but against longitudinal movement on the slide.

5. In a device of the class described, a table, a guiding means secured directly to the table, a frame vertically movable on the guiding means, a line-finder cooperating with the table, means for mounting the line-finder on the frame for movement longitudinally of the frame and of the table, mechanism under the control of an operator for raising and lowering the frame on the guiding means and with respect to the table, said mechanism comprising a shaft, means for mounting the shaft for rotation on the table, means for operatively connecting the shaft with the frame to raise and lower the frame, and means under the control of an operator for holding the shaft against rotation, thereby to hold the frame at an adjusted height.

6. In a device of the class described, a table, a guiding means secured directly to the table, a frame vertically adjustable on the guiding means, a slide movable longitudinally of the frame, a line-finder slidably adjustable in the direction of its length and carried by the slide, a shaft journaled on the table and under the control of an operator, and means on the shaft for raising and lowering the frame when the shaft is rotated, the shaft comprising a portion which is offset with respect to the slide to permit said adjustment of the slide in the direction of its length.

FRANK M. SPERLING.