J. KENNY.

INCASED CONCRETE PILING.

APPLICATION FILED FEB. 25, 1913.

1,068,779. Patented July 29, 1913.

Fig. 1.

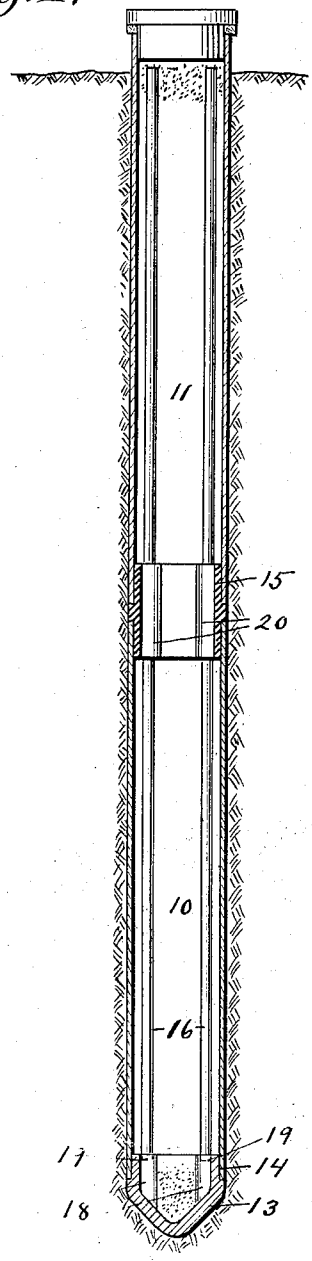

Fig. 2.

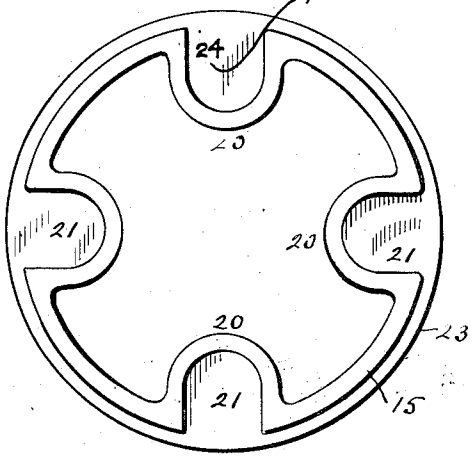

Fig. 3.

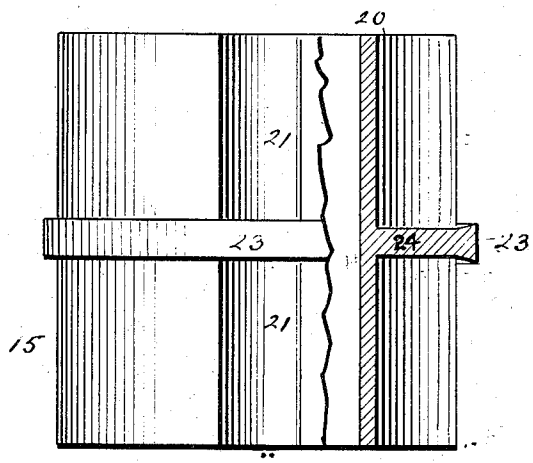

WITNESSES

H. Crocheron

Cunningham

John Kenny
INVENTOR

BY

Clarence A. Seger
ATTORNEY

UNITED STATES PATENT OFFICE.

JOHN KENNY, OF NEW YORK, N. Y., ASSIGNOR TO JOHN SIMMONS COMPANY, A CORPORATION OF NEW YORK.

INCASED CONCRETE PILING.

1,068,779. Specification of Letters Patent. Patented July 29, 1913.

Application filed February 25, 1913. Serial No. 750,498.

To all whom it may concern:

Be it known that I, JOHN KENNY, a citizen of the United States, residing in the borough of Brooklyn, county of Kings, city and State of New York, have invented a new and useful Improvement in Incased Concrete Piling, of which the following is a specification.

My invention relates to certain improvements in the construction of reinforced incased concrete piling, in which superposed tubular sections of iron or steel, held in alinement at their abutting ends by internal sleeves, are driven or sunken into the ground, a cluster of iron or steel reinforcing rods placed therein, and the pile casing then filled with cement or concrete so as to unite the casing sections, alining sleeves and reinforcing rods together and to the concrete filling to make the complete pile.

My invention consists mainly in making the internal alining sleeves elongated, with guiding and holding tubes or semi-tubes, for the reinforcing rods, of a length equal to that of the respective sleeve or sufficient to allow for considerable variations in the length of the sections of the reinforcing rods, which are made in lengths substantially equal to the respective tubular sections of the casing, so that when the lowest casing section is sunken into the ground, and the lowest sections of the reinforcing rods and the alining sleeve placed thereon, the upper ends of the rod sections will all rest within the respective guiding tubes of the alining sleeve in spite of variations in the lengths of rods. Likewise when the next casing section is driven home and the corresponding rod sections are placed therein with their lower ends in the guiding tubes of the first alining sleeve, the upper ends of said rods will also all be within the guiding tubes of the next alining sleeve, all as will be hereafter more fully described.

In order that my invention may be fully understood I shall first describe in detail the mode in which I carry my invention into practice and then distinctly claim the invention.

Reference is to be had to the accompanying drawings forming part of this specification, in which like parts are designated by the same numbers in all the figures.

Figure 1 is a sectional side elevation of a reinforced incased concrete pipe embodying my invention. Fig. 2 is an enlarged plan view of the combined alining sleeve and rod holder of the same. Fig. 3 is a side elevation partly in section of the combined alining sleeve and rod holder.

In the drawings 10, 11 are the tubular metallic sections, forming the casing of the pile; 12 is the driving cap preferably used for receiving the blows of the pile driver; 13 is the driving shoe formed with a neck 14 to fit tightly within the lower end of the pile casing; 15 is one of the metallic internal sleeves for holding the abutting ends of the casing sections in alinement, and 16 are the reinforcing rods, placed and held vertically apart within the pile casing.

The concrete or cement filling is poured into the pile casing, after the casing is driven home and the reinforcing rods are placed therein, to bind and unite the casing sections, alining sleeves, driving shoe, if used, aud reinforcing rods together to form the complete pile.

Efficiently, conveniently and economically to guide and hold the vertical reinforcing rods 16 in position apart, I preferably cast on the interior side wall of the hollow driving shoe 13, when one is used, inwardly and radially projecting bosses 18 spaced peripherally around the shoe as the reinforcing rods 16 are to be spaced, and formed in their upper ends with vertical sockets 19 to receive loosely the lower ends of the several reinforcing rods 16, after the pile casing is driven home. To the same end, I preferably cast the alining sleeve 15 with inwardly and radially projecting bosses 20 formed with vertical guiding tubes or semi-tubes 21, spaced peripherally around the sleeve 15 as the vertical reinforcing rods 16 are to be spaced, to receive and hold said rods in their proper relative positions within the casing.

The vertical reinforcing rods 16 are made in sections substantially equal in length to the respective casing sections, so that the ends of the rod sections will terminate and rest in the guiding tubes 21 of the respective alining sleves 15; but as the rod sections will in practice vary considerably from this length, it is essential that the guiding tubes 21 be elongated the full length of the elongated alining sleeve 15 with which they are formed or at least a substantial part of said length, so that, irrespective of said vari-

ations in length of the rod sections, their ends will always extend into and be confined in the elongated guiding tubes 21.

It is evident that in sinking the casing sections, and introducing therein the alining sleeves 15, the rod guiding tubes 21 therein must be placed in axial alinement with the rod sockets 19 in the driving shoe and with the rod guiding tubes 21 in the other alining sleeves.

To hold the alining sleeve 15 in position in the abutting end portions of the casing sections 10, 11, I may use any suitable means, such as indentations 22 in the casing sections above and below the alining sleeve 15, as shown in Fig. 4, and claimed in my prior United States Letters Patent, dated May 31, 1910, No. 959,546. In Figs. 1, 2 and 3, however, I have shown the alining sleeve 15 cast with an integral peripheral ring 23 around its middle, by preference slightly dovetail in section, to come between and register exteriorly with the abutting ends of the casing sections 10, 11, to receive the end thrust thereof and serve as a stop to hold the sleeve against endwise displacement within the abutting ends of the sections 10 and 11, as shown in Fig. 1. In this instance, I continue the medial ring 23 inward to the interior of the rod guiding tubes 21, to serve as bearings for the respective ends of the reinforcing rods.

It will be evident that, when the diaphragm portion 24 extending across the guiding tubes 21 is omitted, then the lower end of each rod section 16 will rest, within the respective guiding tube 21, upon the upper end of the rod section below it, and the described elongation of the guiding tubes will insure the meeting of the superposed rod sections within the guiding tube in spite of the variations in the lengths of the rod sections.

The integral formation of the alining sleeve with the interior rod-holding bosses forms an extremely simple, economical, effective and convenient means for guiding and holding the reinforcing rods in their allotted positions, and the rod holding bosses in addition coöperate effectively with the concrete filling, tubular sections, sleeves and reinforcing rods to bind the whole composite pile together and form a pile of great strength and durability.

Having thus described my invention and the mode in which I carry the same into practice, I claim:

1. In reinforced incased concrete piling, the combination with the tubular metallic casing sections, of an elongated alining sleeve fitted within the abutting ends of the casing sections and formed interiorly with elongated longitudinal guiding tubes for reinforcing rods to confine the meeting ends of rod sections of varying length, reinforcing rod sections of a length substantially equal to that of the corresponding casing sections having their adjacent ends confined within the respective guiding tubes and a filling of concrete to unite the whole together.

2. The elongated alining sleeve for joining the abutting ends of the metallic casing sections together formed interiorly with elongated longitudinal guiding and confining tubes for the varying meeting ends of vertical reinforcing rods, substantially as described.

JOHN KENNY.

In presence of—
RAYMOND L. SMITH,
SAML. I. STIUM.