(No Model.)

2 Sheets—Sheet 1.

B. S. HUGHES.

RELEASING GEAR FOR ENGINES.

No. 590,064. Patented Sept. 14, 1897.

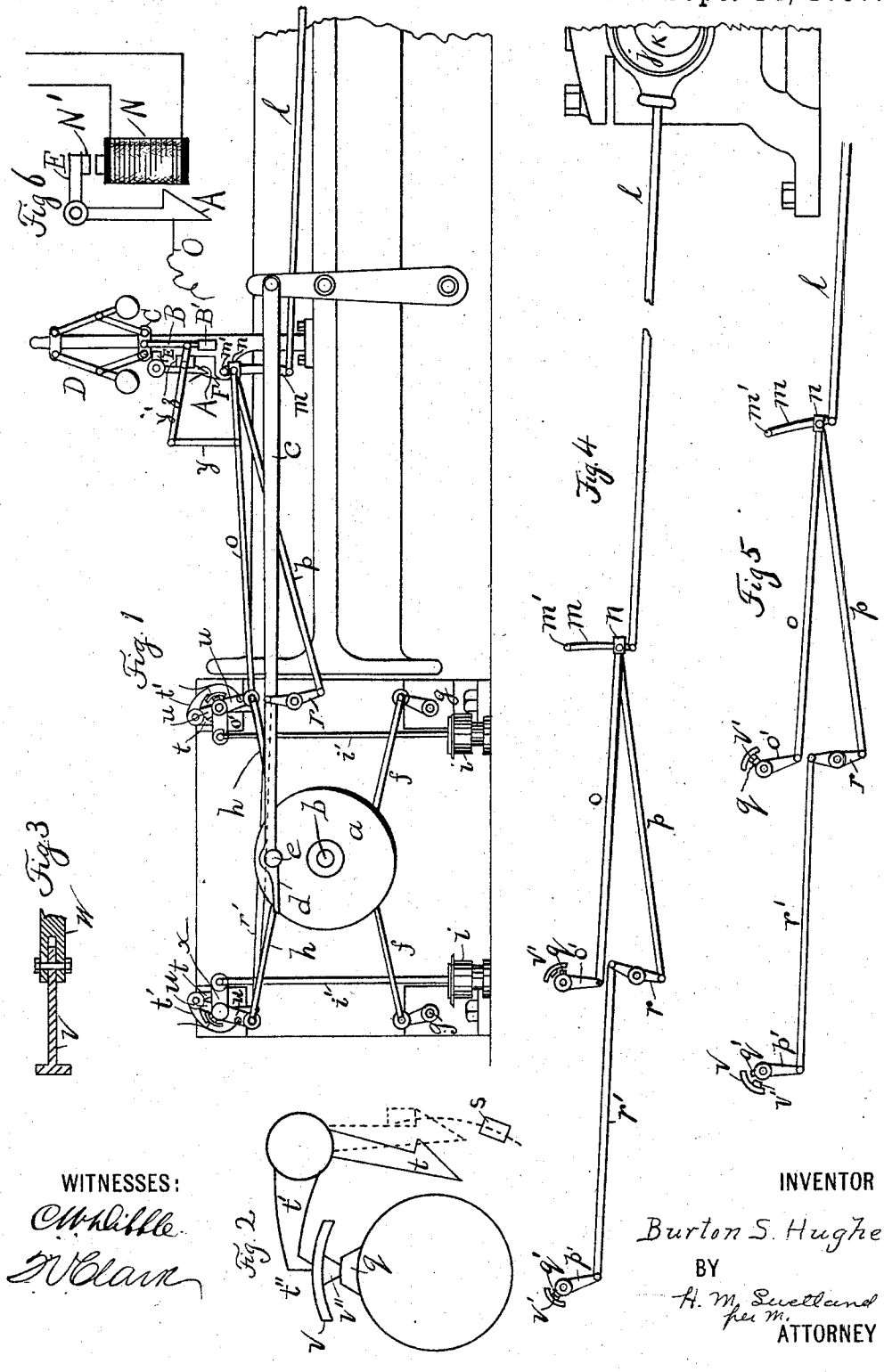

WITNESSES:

C. W. Dibble

F. V. Clark

INVENTOR

Burton S. Hughes

BY

H. M. Swetland per M.

ATTORNEY

THE NORRIS PETERS CO., PHOTO-LITHO., WASHINGTON, D. C.

(No Model.) 2 Sheets—Sheet 2.

B. S. HUGHES.

RELEASING GEAR FOR ENGINES.

No. 590,064. Patented Sept. 14, 1897.

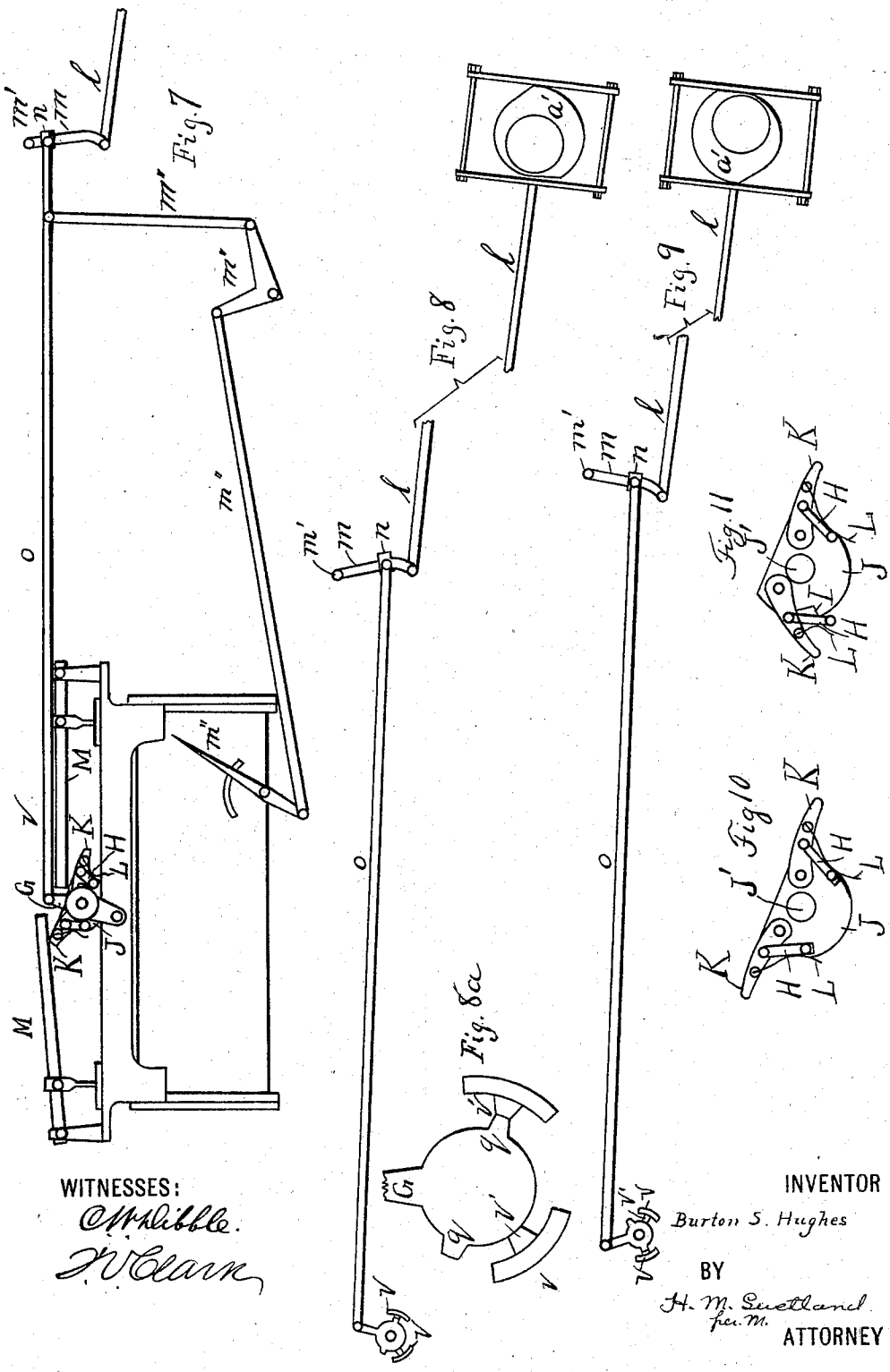

WITNESSES:
C. Wibble.
F. C. Clarke

INVENTOR
Burton S. Hughes
BY
H. M. Suetland fec. M.
ATTORNEY

THE NORRIS PETERS CO., PHOTO-LITHO., WASHINGTON, D. C.

UNITED STATES PATENT OFFICE.

BURTON S. HUGHES, OF COVINGTON, KENTUCKY.

RELEASING-GEAR FOR ENGINES.

SPECIFICATION forming part of Letters Patent No. 590,064, dated September 14, 1897.

Application filed January 27, 1897. Serial No. 620,860. (No model.)

To all whom it may concern:

Be it known that I, BURTON S. HUGHES, a citizen of the United States, and a resident of Covington, in the county of Kenton and State of Kentucky, have invented certain new and useful Improvements in Releasing-Gear for Steam-Engines, of which the following is a specification.

My invention relates to a releasing-gear on that type of steam-engine in which there are four valves—namely, one exhaust at each end of the cylinder and one steam-valve also at each end of the cylinder—the releasing-gear being for the purpose of cutting off steam during the stroke of the piston.

The principal object that I had in view in making this invention was the adaptation of a releasing-gear to steam-engines subject to a fluctuating load—such as those used, for example, for operating electric-railway systems or rolling-mill work—whereby the steam could be cut off at any part of the stroke of the piston, thus enabling the engine to carry a higher average load and give more economical results. Inasmuch as my invention provides for cut-off beyond the half-stroke it is of advantage in multiple-cylinder steam-engines.

In order to describe the details of the mechanical construction, drawings are annexed.

Figure 1 is a side elevation of the larger portion of the steam-engine, whose construction, in so far as my invention is not concerned, is similar that of the Hamilton-Corliss steam-engine, (left hand.) The main eccentric, bearings, &c., therefore, and the neighboring elements are omitted in this view, but are outlined in Fig. 4. Fig. 2 shows a corresponding view to that in Fig. 1 of one of the mechanisms employed, which is not clearly exhibited in Fig. 1 on account of the smallness of the scale and the hiding of one part by another. Fig. 3 is a sectional view of a lever seen in Figs. 1 and 2 and other figures and identified by a reference-letter. Fig. 4 is a view whose object is similar to that in Fig. 2—namely, the exhibition by itself of certain elements which are drawn on too small a scale in Fig. 1 to show an important construction and to show a particular phase—being the same as that which is represented in Fig. 1. Fig. 5 is a view similar to that in Fig. 4, except that some parts are omitted and except that the phase of the elements is different. Fig. 6 is a modification of means for operating the safety device. Fig. 7 shows how the invention may be so modified as to be applicable to a different class of steam-engine—for example, that which is usually found on western river steamers. The peculiar form of eccentric employed is not shown on the right hand of this figure, but is the same as that represented in Figs. 8 and 9. Fig. 8 is a view of a portion of that which is shown in Fig. 7, but in this figure the elements are more clearly apparent as to construction. Fig. 8^a is a repetition of that which is represented in Figs. 7 and 8, but on a much larger scale, so that the nature of the operation may be more easily understood. One of the parts moves under certain conditions, and by measurement it may be found that one of the parts has moved while the other has not. Fig. 9 is a view of the same parts that are shown in Fig. 8, but the phase is different. Figs. 10 and 11 are greatly enlarged views of the lifting mechanism repeated from Fig. 7, where the construction of this part is not so clear, in view of the greatly reduced scale. The difference in the two figures lies only in the relative arrangements of the elements brought about by the operation of the engine.

As usual, *a* is the wrist-plate, which is adapted to rock upon a stud *b*, extending from the back of the cylinder.

c is the eccentric-rod, having a grab-hook *d* for engaging with the pin *e* upon the plate *a*.

f represents connecting-rods between the wrist-plate *a* and the wrists which are provided upon the stems *g* of the exhaust-valves. The means for adjusting these details are not shown, as they have nothing to do with my invention and are only mentioned as means, together with the other elements above mentioned, for identifying the construction of this engine with the usual type of Hamilton-Corliss engines. Necessarily some of the other elements are also common.

h indicates the connecting-rods from the wrist-plate *a* to the mechanism for operating the steam-valves with which they are indirectly clamped, through the agency of hooks, during the opening of the valves, and from which they are released, as hereinafter set

forth, through the action of an independent eccentric and the governor when the piston has arrived at a certain point of the stroke.

At *i* are the dash-pots for the usual purpose of receiving the shock of the valve mechanism at the time of the sudden release of the valves.

It should be noticed that *j* is an eccentric independent of the one for operating the wrist-plate *a*. It is located upon the main shaft *k* of the engine. As the principal object of the eccentric is to give a vibratory motion to the rod *l*, it is evident that I may employ any of the equivalents—for example, a crank—as well known in the state of the art or other means for giving such reciprocating motion.

m is a curved link having a stationary pivot *m'* and provided with a movable block *n*, which may be slid along the length of the link. The position of the block *n* is automatically controlled by the governor, as hereinafter set forth. The two connecting-rods *o* and *p* are pivoted to the block *n*. The rod *o* is pivoted directly to the arm *o'* of one of the cams provided, closing indirectly the corresponding steam-valves. The cam itself is lettered *q*, consisting of a projection upon and movable with the said arm *o'*. The other rod *p* connects indirectly, through the rocking lever *r* and the connecting-rod *r'*, with the arm *p'* of the cam *q'*. By means, therefore, of the auxiliary eccentric *j* and the cams *q* and *q'*, which it operates, the steam-valves are permitted to close when the cams are at a certain phase; but the reason of this needs further explanation, as follows:

s is the usual block, and *t* the usual hook, which grabs the block for opening one of the steam-valves by lifting the block, the steam-valve closing when the hook *t* is released from the said block *s*. The hook *t* forms one arm of the bell-crank, whose other arm is *t'*. This bell-crank is pivoted to the same rocking lever *u* to which the rod *h* in each instance is pivoted, so that when the rods *h* are reciprocated they alternately lift the blocks *s* and therefore open the steam-valves. It becomes necessary, in order to close the valves, to trip the arm *t'* of the said bell-crank, and this is done not directly by the cam *q*, but by an intermediate cam-lever *v*, which is pivoted to a stationary bearing *w*. The upper side of the lever *v*, upon which the tooth *t''* of the arm *t'* rests, is curved, and the cam *v''* is upon its under side. When the cam *q* moves against the cam *v''*, the lever *v* is raised, and consequently the block *s* is released from the hook *t*, because the lever *v* turns the bell-crank, of which *t* and *t'* are the arms. The block *s* in each instance is attached to the valve-arm *x*, which is connected to the plunger-rod *i'* of the dash-pot *i*, the said block being merely a projection on the rear of the valve-arm. The point in the stroke at which the release of the steam-valves takes place depends upon the position of the block *n* on the link *m*, being late or early, according as the block is high or low, as may be seen by referring back and forth to Figs. 1, 4, and 5. In this connection it may be mentioned incidentally, as apparent from the drawings, and referring particularly to the governor, that when the speed is low the block *n* is high, and when the speed is high the block *n* is low. As to the curvature of the link *m*, it is so plotted that the cam-arm *p'* is slightly advanced and the cam-arm *o* correspondingly retarded as the block *n* approaches the center of the link *m*, where cut-off at half-stroke is established. The degree of curvature is dependent upon the length of the connecting-rod of the engine, and the adaptation of this curved link corrects the error due to the said rod and equalizes the cut-off for all parts of the stroke.

The governor does not directly release the steam-valves nor does it directly close them, but produces an adjustment whereby the power of the eccentric *j* operates the releasing device. The explanation is given as follows: To the rod *o*, which is pivoted to the block *n*, is pivoted a rod *y*, which in turn is pivoted to a lever *y'*, having a fulcrum-block *z*, which is held in the normal operating condition by a hook A. The other end of the lever *y'* is pivoted to the weighted pendulum B, suspended from the collar C of the governor D, the collar C being that which descends and ascends, respectively, with the increase and decrease of speed, and accordingly the block *n* has corresponding movements.

The reason that the block *z* is supported by the hook A is so that should the governor-belt break the engine is automatically stopped by the falling of the block *n* to the very lowest position of the link *m*, due to the dropping of the fulcrum-block *z* of the hook A by the impact of the collar C against the lever-arm E, of which the hook A is the other arm. To this end the mechanism is adjusted so that the valves are cut off at the very beginning of the stroke when the block *n* is at the lowest position of the link *m*—in other words, so that the steam-valves will not be opened. The retaining-spring F for the hook A is such that the hook A will not be released from the block *z* unless the pressure of the collar C is greater than about one-quarter of the downwardly-acting force of the governor-balls, their rods, &c., from which it is apparent that although the collar C may come in contact with the lever-arm E, yet the engine will not necessarily stop. At least a quarter of the weight of the governor must act upon the safety device.

The weight of the pendulum B is such as to balance the weight of the rod *o* and other parts which may bear upon the rod *y*.

The *modus operandi* in general consists in the opening of the valves respectively at the beginning of each stroke, the closing of the same at a predetermined time, and the opening of the exhaust-valves at the end of the re-

spective strokes, and the closing of the same before the beginning of the succeeding strokes. The eccentric *j* by its motions causes a reciprocating of the rods *l*, *o*, *p*, and *r'*, and especially of the link *m*. The consequences of this reciprocating motion of the several parts named are that the cams *q* and *q'* are rotated backward and forward and alternately lift the levers *v* and *v'* and release the blocks *s*. The reciprocating motion of the rod *l* is always the same, but not so regarding the rods *o* and *r'*, whose movements to and fro depend in degree upon the location of the block *n*, which, as hereinbefore set forth, depends upon the phases of the governor D.

In regard to the construction shown in the other figures, where no governor is represented, it may be stated that the block *n* may be adjusted by hand through levers M''. Furthermore, the usual form of eccentric in this case is modified, as represented, and consists of a cam *a'* of such shape, as approximately indicated, that the link *m* will be very abruptly returned from the extreme position to the central position at the end of each stroke of the piston, and will be swung from the mid position with a rapidity corresponding to that of an eccentric and requiring an angular motion of the cam *a'* of one hundred and fifty degrees, or about seven-eighths of the travel of the piston.

Another difference consists in the omission of the rod *p* and the rocking lever *r* and the rod *r'*. As to other modifications the following is descriptive: The rod *c* is pivoted to the cam-arm G, which is provided with two projections or cams *q*, adapted to lift the levers *v*. On account of the small scale in Fig. 7 it was impracticable to make visible the levers *v*; but their function is to knock the supports H out of the notches, one of which is shown at I, provided upon the periphery of the hub J on the rocking shaft J'. The supports H retain temporarily in their upward position the lifters K. Springs L hold the supports in place, but yield under the action of the levers *v*.

During the operation the levers *v* are forced outward by the cams *q*, and consequently the supports H are also shoved from the notches I, thereby permitting the levers M and the lifters to fall for the purpose of closing the valves at the proper time. The rocking shaft J' rotates the hub J backward and forward with a reciprocating motion, thereby catching the supports within the notches I at the beginning of the stroke of the piston.

A modification of a principal portion of the safety releasing device is shown in Fig. 6, where either or both the magnet N or the cord O affords simple means for stopping the engine from a distance by the closing of the circuit or the pulling of the cord. The magnet N is located under the armature N', which is attached to the lever-arm E, or the cord O may be attached to the hook A and extended to any distance in the ordinary manner of running cords that are intended to ring bells, &c.

I claim as my invention—

1. In a steam-engine, the combination with the shaft thereof, of an eccentric, which is independent of the eccentric for opening the given exhaust and steam valves, mechanisms for automatically releasing and closing the steam-valves during the stroke of the piston, a curved link *m* adapted to be reciprocated by the said independent eccentric, a block adjustable upon said link, and different rods connecting said block, respectively to said mechanisms.

2. In a steam-engine, the combination with the shaft thereof, of an eccentric which is independent of the eccentric for opening the given exhaust and steam valves, mechanisms for automatically releasing and closing the steam-valves during the strokes of the piston, a curved link *m*, adapted to be reciprocated by the said independent eccentric, a block adjustable upon said link, different rods connecting said block respectively to said mechanisms, and a governor operated by said engine, for controlling the position of said block.

3. In a steam-engine, the combination with the shaft thereof, of an eccentric which is independent of the eccentric for opening the given exhaust and steam valves, mechanisms for automatically releasing and closing the steam-valves during the stroke of the piston, a curved link *m* adapted to be reciprocated by the said independent eccentric, a block adjustable upon said link, different rods connecting said block respectively to said mechanisms, a governor operated by said engine, and controlling the position of said block, and means for throwing the block to the lowest position on the curved link, only when the governor is "dead."

4. In a steam-engine, the combination with the shaft thereof, of an eccentric which is independent of the eccentric for opening the given exhaust and steam valves, mechanisms for automatically releasing and closing the steam-valves during the strokes of the piston, a curved link *m*, adapted to be reciprocated by the said eccentric, a block adjustable upon said link, different rods connecting said block respectively to said mechanisms, a system of levers connecting said block with the given governor of the steam-engine, and supported during its normal action by a hook A under the control of a spring F, and a tripping device for the hook, adapted to be pressed upon by the weight of the governor, the said spring being of such strength that the hook is released only when a predetermined portion of the weight of the governor acts on said releasing device.

5. The combination with a steam-engine, of a reciprocating link *m*, curved as, and for the purpose described, and provided with a block movable thereon, releasing mechanisms for the steam-valves, and means for connecting said block to said mechanisms.

6. The combination with a steam-engine, of a reciprocating link *m*, curved as, and for the

purpose described, and provided with a block movable thereon, releasing mechanisms for the steam-valves, different rods for connecting said block to said mechanisms, said mechanisms each consisting of a hook t for opening and releasing the steam-valves, and forming one arm of the bell-crank of which the other arm is t', a lever v having a stationary pivot adapted to swing the said bell-crank to and fro, by its movements, and a cam q for moving the lever v, and controlled by one of the said rods.

7. Releasing-gear for a steam-engine, consisting of the combination with the valve-arm of a hook for opening the valve, a reciprocating cam, and a lever v, located between the cam and an extension from said hook.

8. The combination with the movable collar C of a steam-engine governor, of a weighted pendulum, B, suspended from said collar, a lever v' pivoted to the pendulum, to a fulcrum-block z, and to a rod which determines the adjustment of cut-off of the steam-engine, a pivoted hook A, for holding up the fulcrum-block z, a projection E from said hook, lying in the path of the collar C, and a spring F pressing against said hook, against the action of the weight of the governor-balls upon the collar C, and of such strength as to cause the hook to retain the block z, against the action of the weight of the governor-balls upon the collar C except when the governor is substantially at rest.

Signed at Covington, in the county of Kenton and State of Kentucky, this 13th day of January, A. D. 1897.

BURTON S. HUGHES. [L. S.]

Witnesses:
THOS. M. FISHER,
W. P. MCLAUGHLIN.