No. 793,009. PATENTED JUNE 20, 1905.

H. C. MILLER.

MEANS FOR PICKING UP LAYERS OF FABRIC OR PAPER TO BE ASSEMBLED.

APPLICATION FILED DEC. 28, 1903.

2 SHEETS—SHEET 1.

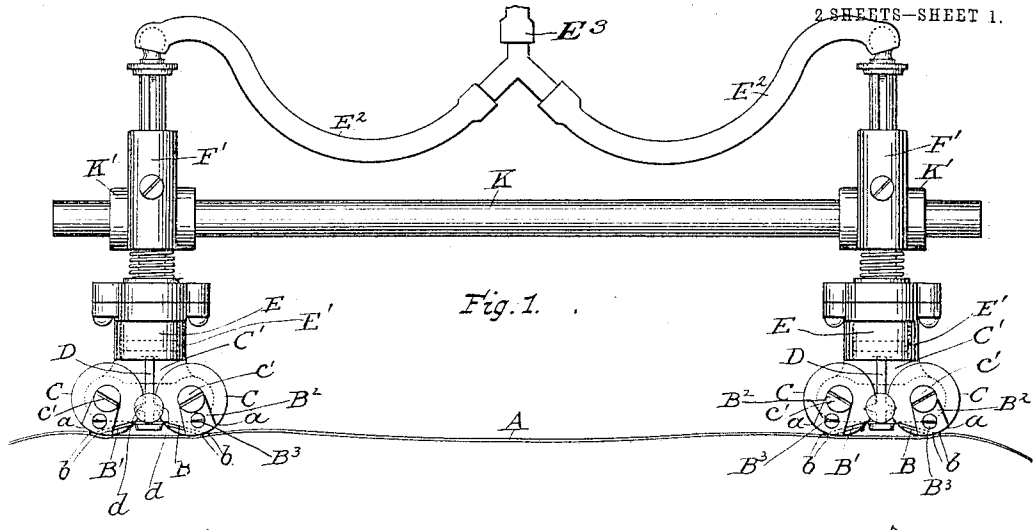

Fig. 1.

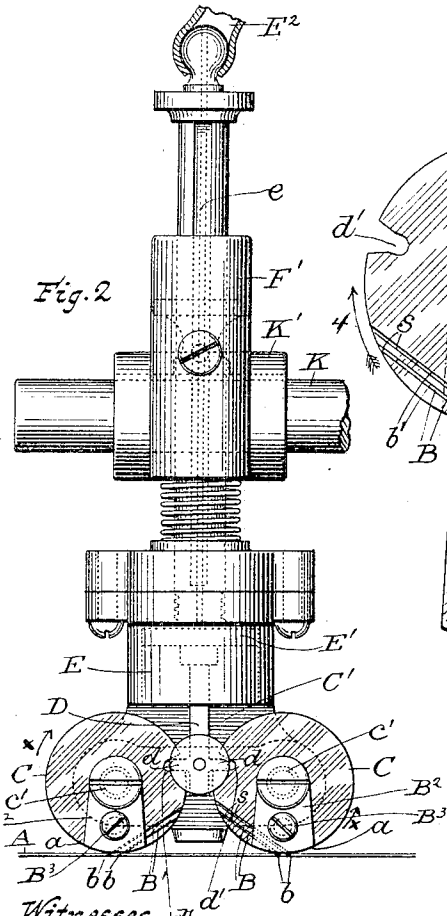

Fig. 2

Fig. 4.

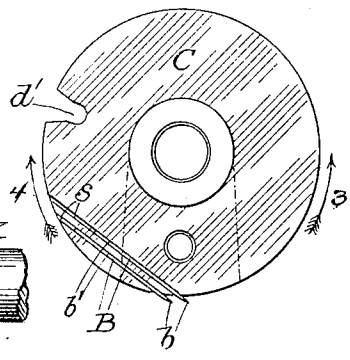

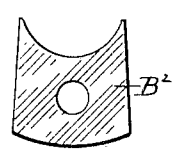

Fig. 5.

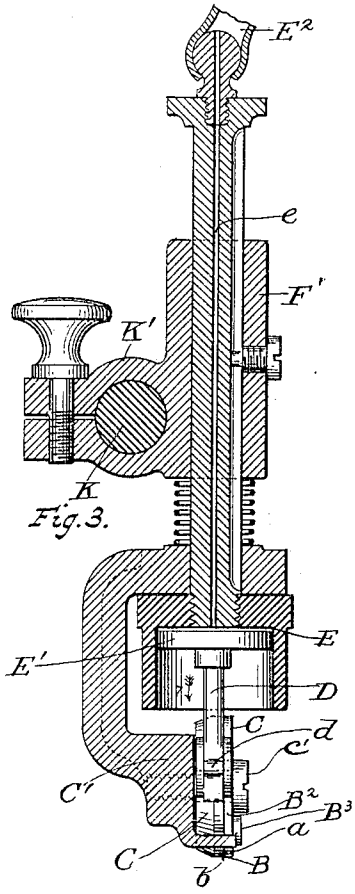

Fig. 3.

Witnesses.

Charles Sreekirk

H. Sreekirk Jr.

Henry C. Miller
Inventor.

by Alex. Selkirk

attorney

PHOTO-LITHOGRAPHED BY SACKETT & WILHELMS LITHO & PTG. CO. NEW YORK

No. 793,009. PATENTED JUNE 20, 1905.

H. C. MILLER.

MEANS FOR PICKING UP LAYERS OF FABRIC OR PAPER TO BE ASSEMBLED.

APPLICATION FILED DEC. 28, 1903.

2 SHEETS—SHEET 2.

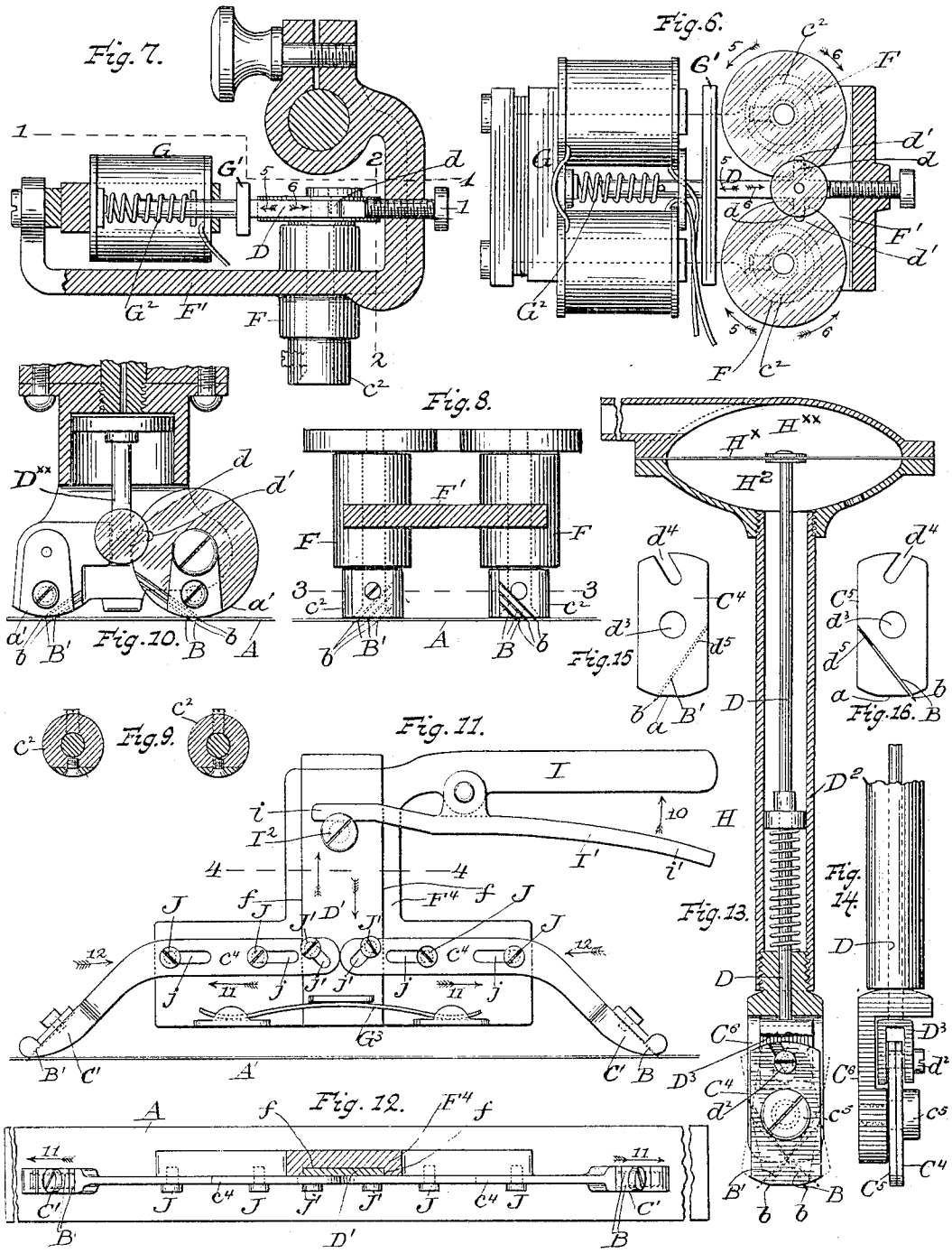

Witnesses.

Charles Selkirk

A. Selkirk Jr.

Henry C. Miller,
Inventor.

by Alex. Selkirk

attorney

PHOTO-LITHOGRAPHED BY SACKETT & WILHELMS LITHO. & PTG. CO. NEW YORK

No. 793,009. Patented June 20, 1905.

UNITED STATES PATENT OFFICE.

HENRY C. MILLER, OF WATERFORD, NEW YORK.

MEANS FOR PICKING UP LAYERS OF FABRIC OR PAPER TO BE ASSEMBLED.

SPECIFICATION forming part of Letters Patent No. 793,009, dated June 20, 1905.

Application filed December 28, 1903. Serial No. 186,926.

To all whom it may concern:

Be it known that I, HENRY C. MILLER, a citizen of the United States, and a resident of Waterford, in the county of Saratoga and State of New York, have invented a new and useful Improvement in Means for Picking Up Layers of Fabric or Paper to be Assembled, of which the following is a specification.

My invention relates to a device for picking up layers of fabric or paper to be assembled as required in collars or cuffs; and it consists in the novel arrangement of parts hereinafter described, and set forth in the claims.

The objects and advantages of the invention will be fully understood from the following description when taken in connection with the annexed drawings.

Figure 1 is an elevation of a mechanism embodying my invention and adapted to be operated by compressed air. Fig. 2 is an elevation of the same, on an enlarged scale, of a portion of the device shown in Fig. 1. Fig. 3 is a transverse section of the same. Fig. 4 is an enlarged detail view, on an enlarged scale, of the preferred form of pin-holding device. Fig. 5 is a detail view of a keeper used in connection with the pin-holder. Fig. 6 is a sectional view taken on line 1 1, Fig. 7, of a modification. Fig. 7 is a longitudinal section of the same. Fig. 8 is a transverse section taken on the line 2 2, Fig. 7. Fig. 9 is a sectional view taken on the line 3 3, Fig. 8. Fig. 10 is an elevation, partially in section, of a further modification. Fig. 11 is a side elevation of a further modification. Fig. 12 is a horizontal section of the same, taken on line 4 4, Fig. 11. Fig. 13 is a plan illustrating a modification. Fig. 14 is a side elevation of the same. Figs. 15 and 16 are face views of the needle-holders employed in the construction shown in Figs. 13 and 14.

In the drawings, A is a piece of sheet material to be picked up and transferred to another place to be assembled. This piece of material may be woven fabric for use in a collar or cuff, or of paper, or of leather, such piece of any material being picked up and transferred to be assembled with other pieces.

B and B′ are fabric-engaging needles mounted in holders C, by which they are retained in place and guided in their movements. In Figs. 1, 2, 4, 10, 12, and 13 each holder C is shown to employ two needles, while in Fig. 8 three needles are shown. The needles B B′, respectively, are arranged, preferably, in groups of two or more and at angles to each other and the surface of the fabric to be picked up and transferred, their points projecting sufficiently beyond the surface of the holder as the nature or thickness of the fabric may require. In Figs. 1 and 2 the holders C are in the form of disks c, adapted to be oscillated in opposite directions from a fixed pivot c' on bracket C′. The disks c constitute holders for the needles B and are provided with actuating mechanism by means of which they may be oscillated alternately in opposite directions. The actuating mechanism shown in Figs. 1, 2, 3, 4, and 6 consists of a vertical reciprocating bar D, provided with two teeth d, working in corresponding notches d' in the disks c. The teeth $d\,d$ may be formed on the disks and the notches in the rod D, and the same result will be accomplished.

In the modification disclosed in Figs. 6, 7, and 8 the holders C consist of horizontally-mounted disks c^2, the lower ends of which support the needles B B. These horizontal disks c^2 are mounted in bearings F, preferably integral with bracket-piece F′, and are rotated alternately in opposite directions, as in directions of arrows 5 and 6 in Fig. 6, the arrows 5 indicating the movement when thrusting the needles into the fabric and the arrow 6 indicating the movement of the needles when they are being withdrawn.

The reciprocating bar D may be operated in various ways. In the form shown in Figs. 1, 2, and 3 the rod D is provided with a piston E′, which operates in a cylinder E. A rod having a duct e communicates with the cylinder, and connected to the upper end of the rod and communicating with the duct is a tube E^2, which may be connected at E^3 to a bulb (not shown) to operate the needles. When air is employed to operate the device, it is forced through the tube into ducts e, Figs. 1, 2, and 3, and acting on the pistons E′ oscillates the disks c^2 in the direction of the arrows $x\,x$, Fig. 2, and forces the needles into

the fibers of the fabric, the disks resting on and holding the fabric down on its support. This operation may be carried on by connecting an armature to the bar D, the same being attracted by magnets G′ and returned to normal position by spring G^2. The means for controlling the current to operate the armature will be located in convenient reach of the operator, as will be readily understood. When the armature is attracted, oscillating motion is imparted to the disks c^2, which throw the needles in opposite directions and engage the fibers of the fabric in the same manner hereinbefore pointed out.

In Fig. 10 I have shown a different form of my invention in that one needle-holder a' and its needles are stationary, while the companion holder a^2 is mounted to oscillate, as previously described. When this construction is used, the holders are placed on the fabric and the rod $D^{\times\times}$ is operated and the holder a^2 is oscillated, which increases the distance between the needles and causes them to pick up the fabric.

In the modification shown in Figs. 11 and 12 the needles are shown to be held in place by horizontally-movable holders. (Shown in Fig. 12.) These movable disks C′ consist each of a needle-holder and a body c^4 and are adapted to be reciprocated to cause the needles to pick up and release the fabric. The mechanism for reciprocating the holders shown in Figs. 11 and 12 consists of a reciprocating bar D′, working in ways f in a bracket F^4 and bearing against a spring G^3, an operating-handle I, and lever I′, pivoted on handle I, the short arm i of lever I′ resting on a pin I^2, projecting from the bar D′, and its long arm i' serving as a grip. The body portion c^4 of the holders C′ is formed with slots j, through which pass guiding-pins J, and adjacent the inner of said slots are inclined slots j', with which pins J′ engage. When the lever I′ is operated in the direction of arrow 10, Fig. 11, the pins J′ impinge the walls of the slots j' and compel the holders C′ to move in opposite directions and force the needles into the fibers of the fabric, the spring G^3 returning the parts to normal position when pressure on the lever is relieved.

In the modification shown in Figs. 13 and 14 the fabric-engaging needles B B′ are shown to be contained in oscillating needle-holders C^4 and C^5, pivoted on bracket C^6 by means of a pivot c^5, from which both said needle-holders are simultaneously oscillated in opposite directions, as illustrated by full and dotted lines in Fig. 13. The bracket C^6 is suitably connected with tube D^2, within which reciprocating bar D operates. The bar D is connected at its lower end to a bracket D^3, having a pin d^2. The needle-holders C^4 C^5 are duplicates, each having an opening d^3 and an inclined slot d^4, the slots being of corresponding angles, but oppositely disposed, as shown in Figs. 15 and 16. In the face of each holder is a groove d^5 to receive a needle, the grooves in the holders being of the same degree of inclination, but oppositely disposed, so that the needles when placed in position will cross each other. This form of my invention is also provided with means for operating the needles, the same consisting of a piston H, fast on the rod D, a spring interposed between said piston and the top of the bracket C^6 serving to return the parts to their normal position. The upper end of the tube D terminates in a chamber divided into two compartments H^2 $H^{\times\times}$ by a diaphragm $H^{\times}$, the rod D being connected to said diaphragm. An air-supply communicates with chamber $H^{\times\times}$ to operate the diaphragm, which in turn actuates the holders C^4 C^5 and throws the needles simultaneously in opposite directions, as will be readily understood. When the supply of air is cut off and pressure relieved, the spring returns the parts to normal position and withdraws the needles from the fabric and releases the latter.

In operation with either form of the invention the surface of the needle-holders engage the fabric to be lifted, the needle-holders in each instance being turned so that their points will not engage the fabric-surface when starting to operate the pick-up. When, however, the needle-holders are operated, the needles are thrust outwardly to spread them apart in opposite directions to engage the fibers of the fabric, the latter being held in this position while the pick-up is lifted and moved to the desired place, whereupon the movement of the needle-holders is reversed, which draws the needles in toward each other and releases the fabric.

In this invention the fabric-engaging needles B B′ and their relationship with the holders is important, the needles being employed in numbers or sets best adapted for the work to be operated upon, and in each instance said needles are placed at an angle to the plane of the surface of the fabric and are simultaneously thrust in opposite directions.

Each needle-holder C is preferably provided with grooves s s for the reception of the body portion b' of the needles, and coöperating with these grooves are keepers B^3, which hold the needles in place, the keepers being secured by screws, as shown.

For operating with small pieces of fabric a single pick-up, as shown in Figs. 6 and 11, may be employed, while for operating with larger pieces or pieces of greater thickness and weight two or more of these pick-ups yoked together by a bar K, adjustable lengthwise in sockets K′, Fig. 3, connected to brackets F′, as shown, and, if desired, three or four or more of these pick-ups may be employed, being yoked together in any manner, as may be found to be advatageous.

Any suitable means may be employed for automatically moving the apparatus itself be-

tween any selected two places and alternately to and from each place to the other; but as this means forms no part of my present invention I have not shown it.

It will be understood that the projecting point-end portions *b* of the needles B may be adjusted to a greater or less distance past the holders as the thickness of fabric may allow without penetrating the piece of fabric below, or the needles may be projected to such a distance as to engage with two pieces of fabric of a pile of similar and like-adjusted pieces, so as to pick up and transfer both such pieces at one time and by a single movement.

This fabric-transferring apparatus may be employed with advantage for transferring pieces of sheet material which cannot be lifted by suction or nippers, as has been employed for lifting and transferring sheets of paper, and may be used with great advantage for picking up and placing irregular as well as regular forms of pieces of paper as well as of woven fabric and leather.

Having described my invention, what I claim, and desire to secure by Letters Patent, is—

1. In a pick-up device, the combination with a pair of pivotally-mounted needle-holders, needles carried by said holders, said needles being inclined in opposite directions, and means for turning the needle-holders and needles in opposite directions.

2. In a pick-up device, the combination with a pair of pivotally-mounted needle-holders, needles carried by said holders, means for turning the needle-holders and needles in opposite directions, means supporting the needle-holders, a frame, and a yielding connection between the means supporting the needle-holders and the frame.

3. In a pick-up device, the combination with a pivotally-mounted needle-holder provided with a needle, a second needle-holder provided with a needle, means yoking the needle-holders together, and means simultaneously turning the needle-holders with their needles in opposite directions.

4. In a pick-up device, the combination with a pivotally-mounted needle-holder provided with a needle, a second needle-holder provided with a needle, means yoking the needle-holders together, means simultaneously turning the needle-holders with their needles in opposite directions, means supporting the needle-holders, a frame, and a yielding connection between the means supporting the needle-holders and the frame.

5. In a device for picking up pieces of fabric, the combination with a pair of pivotally-mounted needle-holders adapted to contact with the piece of fabric picked up, needles carried by the holders, said needles being inclined in opposite directions, and means for turning the needle-holders and needles in opposite directions.

6. In a device for picking up pieces of fabric, the combination with a pair of needle-holders provided with needles, the needles on the holders being inclined in opposite directions, a reciprocating element connecting the needle-holders, and means operating the reciprocating element to throw the needles in opposite directions to engage the fabric.

7. In a device for picking up pieces of fabric, the combination with a pair of needle-holders adapted to bear on the fabric to be picked up, needles projecting from the needle-holders, said needles projecting from the holders in opposite directions, means connecting the holders together, and mechanism operating the holders to throw them and their needles in opposite directions.

8. In a pick-up device, the combination with a pair of pivotally-mounted needle-holders, plates fastened to the needle-holders, grooves formed to receive the needles, means fastening the plates to the needle-holders to bind the needles in their grooves, and mechanism simultaneously operating the needle-holders with their needles in opposite directions.

9. In a pick-up device, the combination with a pair of pivotally-mounted needle-holders formed with notches, needles projecting in opposite directions from the needle-holders, a reciprocating rod provided with projections which engage the notches in the needle-holders, and means operating the reciprocating rod.

10. In a pick-up device, the combination with a pair of oppositely-disposed needle-holders provided with needles, the bottom of the holders adapted to bear on the fabric lifted and the needles projecting beyond the needle-holders, a reciprocating rod, means connecting the rod and the needle-holders to throw the needle-holders with their needles in opposite directions, and means operating the reciprocating rod.

11. In a pick-up device, the combination with a pair of oppositely-disposed needle-holders provided with needles, the bottoms of the needle-holders adapted to bear on the fabric lifted and the needles projecting beyond the needle-holders, a reciprocating rod, means connecting the rod and needle-holders to throw the needle-holders with their needles in opposite directions, means operating the reciprocating rod, and a spring returning the needle-holders and needles to normal position.

12. In a device for picking up a piece of fabric, the combination with a pair of oppositely-movable needle-holding plates adapted to have their surfaces bearing on the fabric lifted, means for simultaneously moving the needle-holding plates in opposite directions, fabric-engaging needles suitably secured in each of said plates with the point ends of said needles diverging and projecting beyond said surfaces of the said plates.

13. In a device for picking up a piece of fab-

ric, the combination with a pair of needle-holding plates adapted to have their lower surfaces bearing on the fabric lifted, and means for moving said plates simultaneously in opposite directions, diverging fabric-engaging needles adjustably secured in the needle-holding plates, the point ends of the needles extending beyond the outer surfaces of the lower side of the needle-holding plates.

14. In a device for picking up a piece of fabric, the combination with two pairs of needle-holders in which the needle-holders of each pair are provided with surfaces for bearing on the fabric and are moved simultaneously in opposite directions, fabric-engaging needles held in each holder of each pair with their point ends out past the needle-holding surfaces and arranged at different angles, mechanism for operating said needle-holders, and means for yoking each pair of needle-holders and their operating mechanism with those of each of the other pair.

15. In a device for picking up pieces of fabric, the combination with a pair of needle-holders, needles carried by the holders, said holders bearing on the fabric to be engaged, mechanism for increasing the distance between the needles and forcing the latter into the fibers of the fabric to stretch the latter, and mechanism for lifting the device and the fabric.

16. In a device for picking up pieces of fabric, the combination with a pair of needle-holders adapted to bear on the fabric to be lifted, needles extending from the needle-holders in opposite directions, and means for spreading the holders and needles after the latter have engaged the fibers of the fabric to stretch the latter and hold the same to the needle-holders.

17. In a device for picking up pieces of fabric, the combination with a pair of needle-holders adapted to bear on the fabric to be lifted, oppositely-disposed needles which project beyond the plane of the needle-holders when the latter are in normal position to engage the fibers of the fabric, and mechanism for spreading the needles to stretch the fabric, and hold the same against the needle-holders.

HENRY C. MILLER.

Witnesses:
ALEX. SELKIRK,
CHARLES SELKIRK.