Jan. 1, 1935. L. H. WILSON 1,986,696

METHOD OF MAKING COATED PIPES

Filed Oct. 11, 1932 4 Sheets-Sheet 1

Fig. 1.

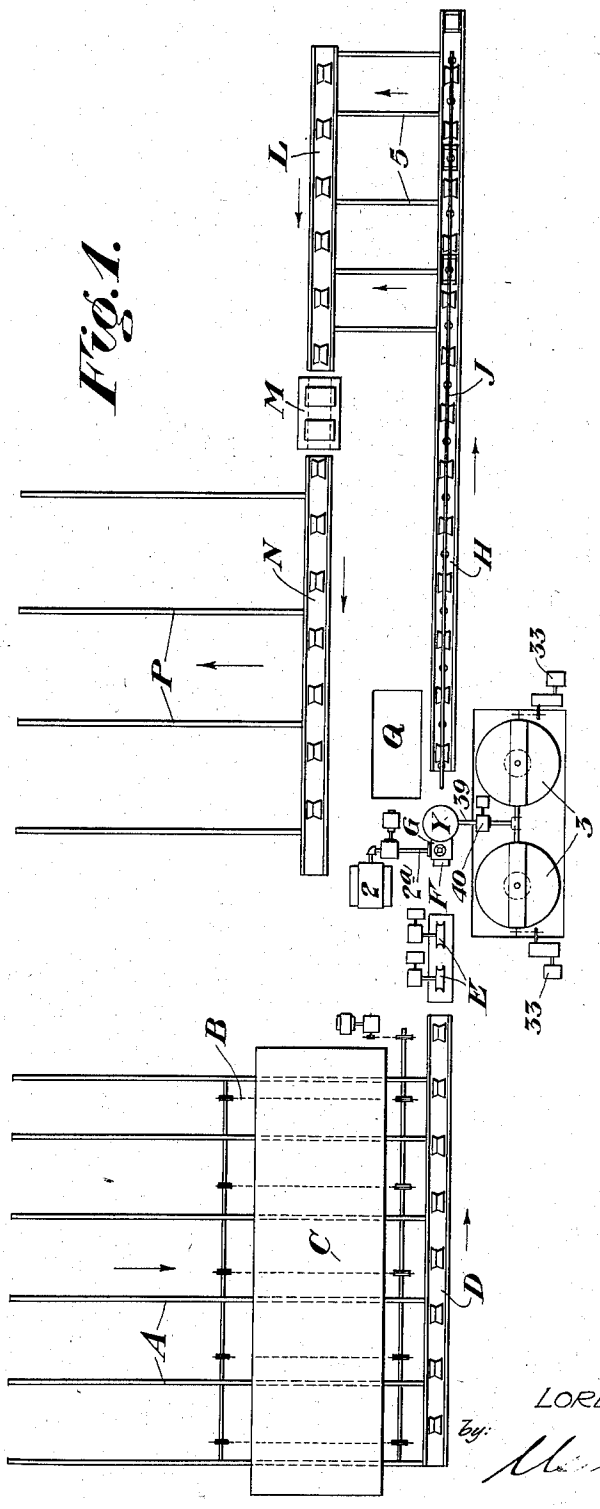

Fig. 2.

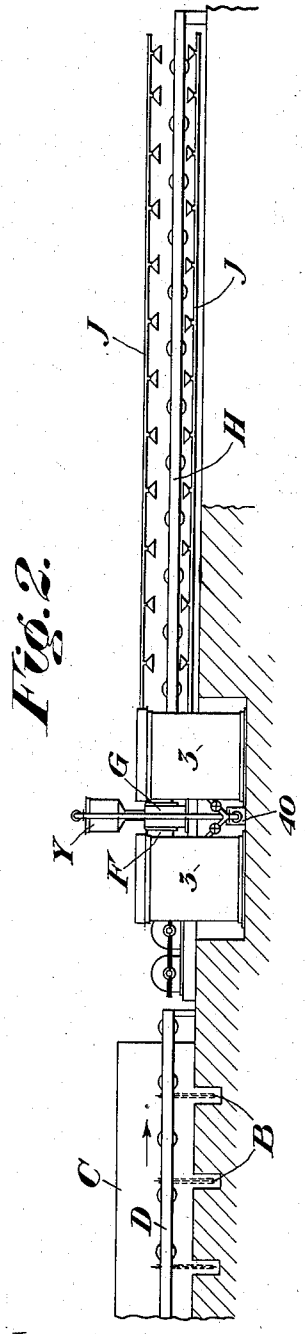

Inventor:
LORENZ HENRY WILSON,
by: Mima & Rauber
his Attorneys.

Jan. 1, 1935. L. H. WILSON 1,986,696

METHOD OF MAKING COATED PIPES

Filed Oct. 11, 1932 4 Sheets-Sheet 2

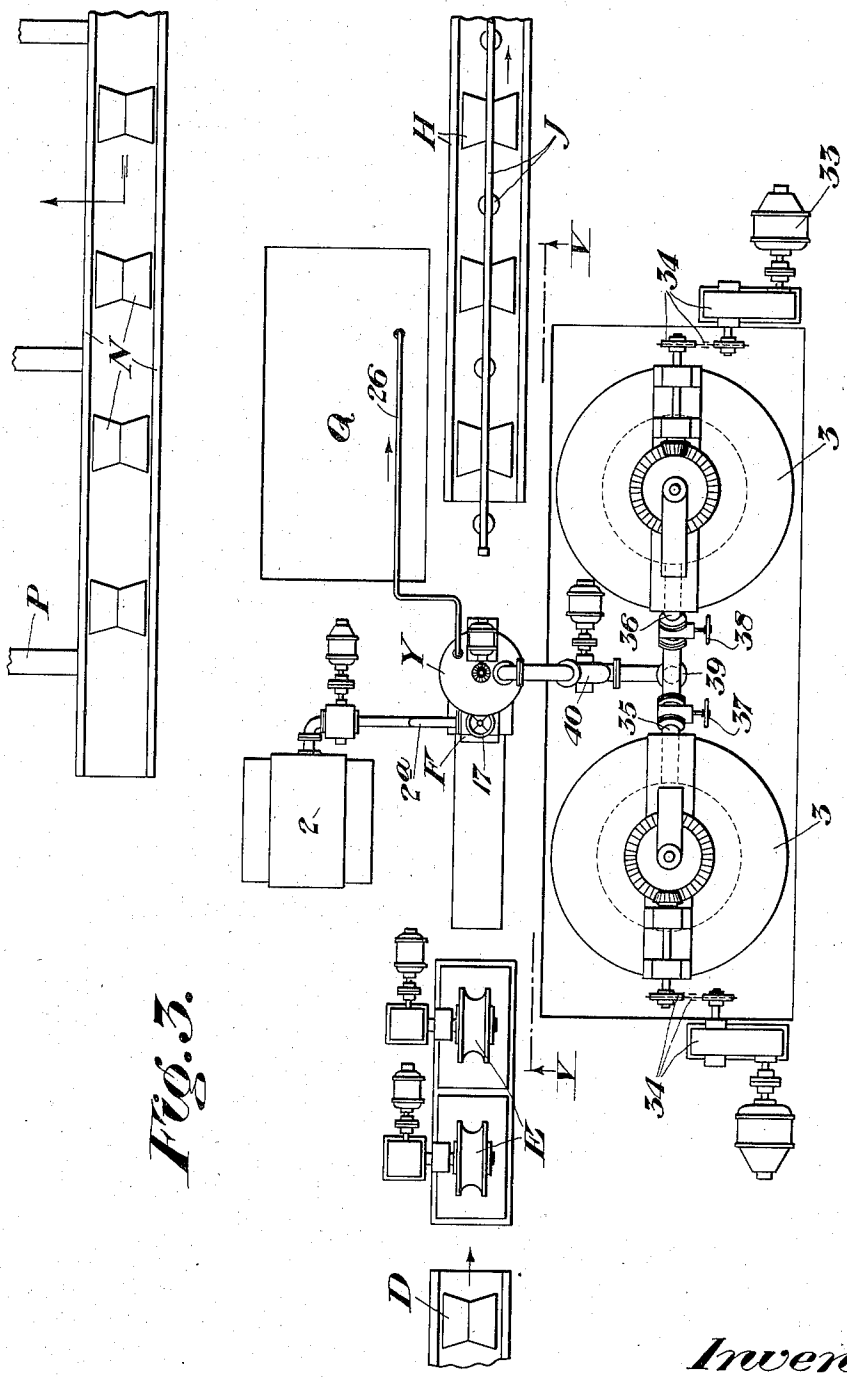

Fig. 3.

Inventor:
LORENZ HENRY WILSON,
by:
Masius & Raubr
his Attorneys.

Jan. 1, 1935. L. H. WILSON 1,986,696

METHOD OF MAKING COATED PIPES

Filed Oct. 11, 1932 4 Sheets-Sheet 3

Fig. 4.

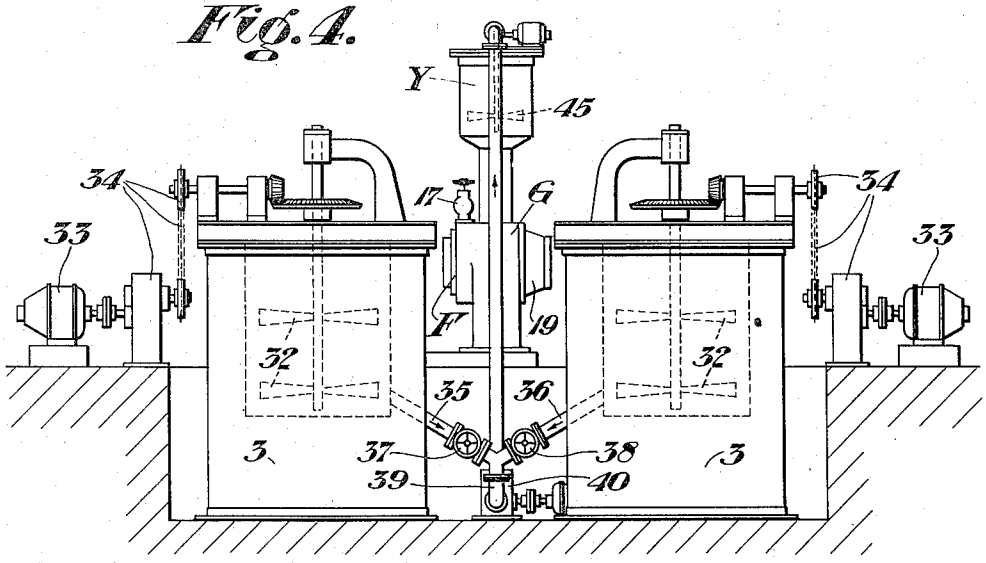

Fig. 5.

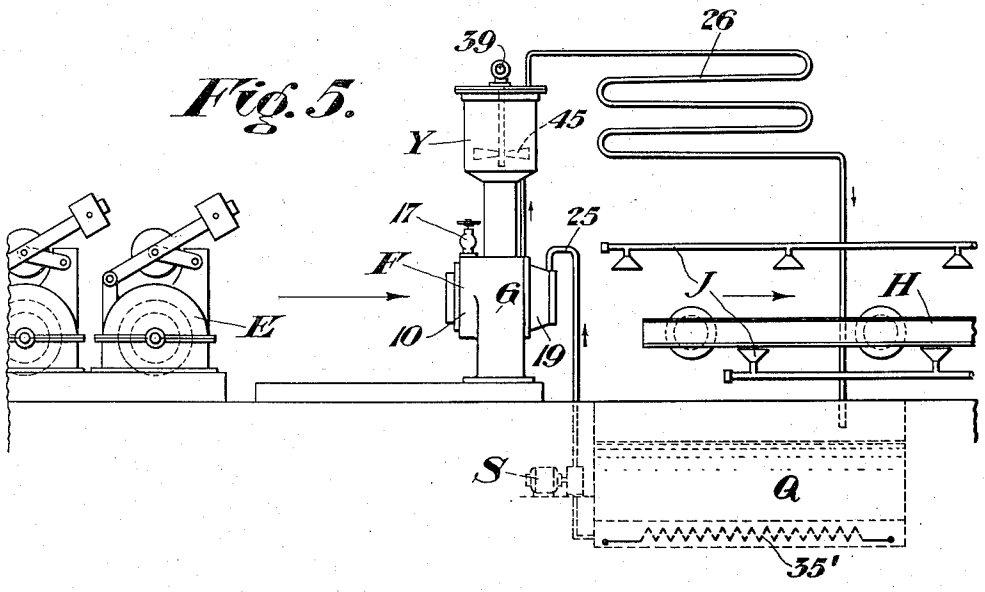

Inventor:
LORENZ HENRY WILSON,
by
Usina & Rauber
his Attorneys.

Jan. 1, 1935. L. H. WILSON 1,986,696

METHOD OF MAKING COATED PIPES

Filed Oct. 11, 1932 4 Sheets-Sheet 4

Fig. 6.

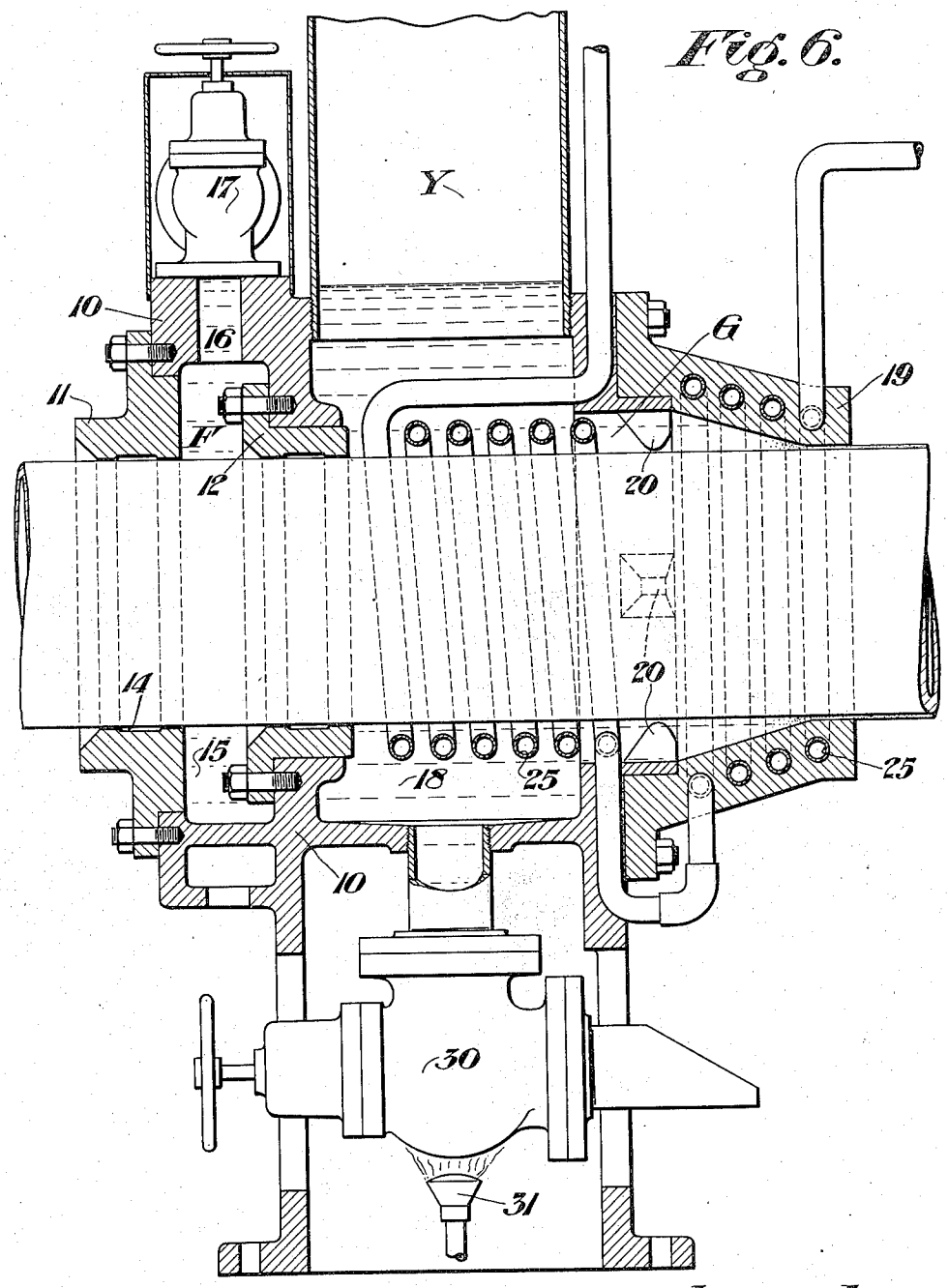

Inventor:
LORENZ HENRY WILSON,
by: Usina & Rauber
his Attorneys.

Patented Jan. 1, 1935 1,986,696

UNITED STATES PATENT OFFICE

1,986,696

METHOD OF MAKING COATED PIPES

Lorenz Henry Wilson, McKeesport, Pa., assignor to National Tube Company, a corporation of New Jersey

Application October 11, 1932, Serial No. 637,363

7 Claims. (Cl. 18—48)

This invention relates to the manufacture of coated pipes, and more particularly to asphalt coated pipes and a method of applying said coating to preformed metal pipes.

One object of the present invention is to provide a method of mechanically applying asphalt coating to pipes by extruding the coating upon the pipes.

Another object is to provide a method whereby coatings of varying thicknesses may be rapidly applied to preformed metal pipes.

In the drawings:

Figure 1 is a plan view of apparatus used in coating pipe in accordance with the method of this invention.

Figure 2 is a side elevation thereof.

Figure 3 is an enlarged plan of the coating apparatus per se.

Figure 4 is a side elevation of the apparatus of Figure 3.

Figure 5 is a sectional elevation taken on the line V—V of Figure 3.

Figure 6 is an enlarged sectional elevation through the coating nozzle.

In carrying out the method of this invention, uncoated black or galvanized iron or steel pipes or tubes, or any other article having a symmetrical shape from end to end, to be coated are assembled on a receiving table A from which they may be manually or mechanically delivered onto a slow moving mechanical conveyer B which passes through a furnace or oven C. The conveyer B will convey the pipes through the furnace or oven C where they will be heated to at least 212 degrees Fahrenheit to remove any moisture or oil and to prepare the pipe to receive the coating.

The conveyer B will automatically deposit the heated and dried pipes or tubes onto a roller conveyer D which will in turn move the pipes or tubes rapidly at right angles to their path of travel through the furnace C and will feed the pipes or tubes into the bite of pinch-rollers E. The pinch-rollers E will in turn feed the pipes or tubes into an extrusion nozzle F where a priming or flux coating will be applied. The priming or flux coating is composed of a molten asphalt composition which is supplied to the nozzle F from a melting tank or cooker 2, which will be hereinafter described. The nozzle F will also be hereinafter described more in detail.

The pipes or tubes pass immediately from the priming or coating nozzle F through a second coating nozzle G of the extrusion type where a heavy plastic coating of asphalt or asphalt composition will be extruded around the tube or pipe of a predetermined thickness. This heavy plastic asphalt composition coating is adapted to be supplied to the extrusion nozzle G from a pair of duplicate melting tanks or cookers 3, to be described. The extrusion nozzle G will also be hereinafter described more in detail.

From the extrusion nozzle G the heavily coated tubes or pipes will pass immediately onto an outgoing roller-type conveyer table H which is provided with a spray pipe J arranged above the table and which is adapted to spray freshly coated tubes or pipes with water or other fluid or finely pulverized materials to set and harden the asphalt coating. When finely pulverized materials are used, such as cement dust, they will adhere to the coating and serve to assist in protecting the coating from the sun's rays.

After the coated tubes or pipes are passed along the table H to its outer terminal they will be transferred over the skids 5 onto a third roller conveyer table L, and will be moved by the roller conveyer table L through a standard wrapping machine M which is adapted to apply a spiral wrapping of paper, fabric, metal foil or the like over the set and hardened asphalt composition coating, so as to protect said coating from danger, either mechanical or solar, occasioned when the pipe is in transit or in service. If desired, any standard spray apparatus may be substituted for the machine M, and lime or other coating in solution may be applied over the hardened asphalt.

The pipes or tubes pass through the wrapping machine M and onto a roller conveyer table N from which they are removed to an inspection table P.

The asphalt coating compound used as a priming coat may be either plain asphalt or asphalt with a filler of silica, similar to that used for the outside coat. The material for the priming coat is deposited in the cooker or melting tank 2, which is heated by suitable means such as steam coils, electrical heating resistance elements, direct firing or the like (not shown).

The asphalt in the cooker 2 is heated until it becomes molten and is quite fluid. Then it is pumped from the cooker 2 through a conduit 2^a to the priming extrusion nozzle F. The priming nozzle F is composed of a casting 10 having removable port members 11 and 12. The port member 11 is adapted to snugly fit the pipe or tube to be coated, and is provided with a recess 14 intermediate its outside and inside faces, which is adapted to trap any of the coating material tending to flow rearwardly along the pipe or tube being

coated and to reduce the friction on the pipe. The port member 12 is of slightly larger diameter than the pipe or tube being coated so as to provide a clearance around the pipe or tube equal to the thickness of the priming coat desired. The casting 10 has an internal diameter materially greater than the openings in the ports 11 and 12 so as to provide a chamber 15 adapted to contain a body of the molten and fluid coating material used in priming the pipe. An internal port 16 having a valve 17 is provided through which the fluid material from the cooker 2 passes into the chamber 15 of the nozzle F. Sufficient head is provided to extrude the fluid coating through the port 12 and around the pipe.

The priming nozzle F has its port 12 connecting directly to the inlet side of the coating extrusion nozzle G. The nozzle G is structurally a continuation of the casting 10 and comprises a hollow coating chamber 18 of materially greater diameter than the largest size pipe or tube adapted to be coated, which chamber is connected to its upper end with a plastic coating container or vessel Y to which the plastic composition is directed from the cooker 3. A removable extrusion nozzle port 19 is secured to the outgoing end of the coating nozzle G, and this nozzle port is adapted to have an outlet opening of a diameter such as will limit the thickness of the extruded coating to that desired. Suitable guide lugs 20 are provided in the nozzle port 19 to center and guide the pipes passing through the said nozzle port.

The nozzle G and nozzle port 19 are provided with suitable coils 25 through which heating or cooling mediums, as desired, may be passed. In practice, the plastic coating material used to coat the pipes is delivered to the vessel Y at a much higher temperature than that desired or suitable for extruding onto and around the pipe, and in this instance a cooling medium such as oil is preferably passed or circulated through the coils 25. The oil being circulated through the coils 25 is preferably passed through a bank of cooling coils 26 at a distance from the vessel Y, and is circulated from a storage tank Q by a pump S.

If, for any reason, such as a breakdown or temporary suspension, the plastic composition material should become cool or hardened in the nozzle G, suitable heating elements 35′ of any standard construction are provided in the tank Q for heating the oil to be circulated through the coils 25, and said heated oil will be circulated until the plastic material becomes sufficiently molten to pass out of the nozzle G.

A suitable drain or clean-out valve 30 is provided at the lower side of the nozzle G to provide for draining and cleaning out the nozzle when the operation of the apparatus is to be discontinued. A suitable source of heat, such as a burner 31, is preferably provided for heating the valve 30 so as to remove any cooled or cold deposit of the composition from said valve.

The cookers or melting tanks 3 in which the plastic material for forming the coating is preferably melted may be of any usual design and construction adapted for melting an asphalt or an asphalt composition containing silica or any other suitable mineral filler. The cookers or tanks 3 as shown are provided with agitators 32 operated by motors 33 through suitable drive connections 34. These agitators are adapted to be constantly operated during the melting of the asphalt composition so as to prevent burning and separation of the asphalt and silica. The cookers or tanks 3 are connected by conduits or pipes 35 and 36 to a main pipe 39 which, in turn, connects with the storage vessel Y.

The coating material, as it is directed to the container or vessel Y, preferably is at a temperature of approximately 525 degrees Fahrenheit and, since this temperature is too high for proper extrusion, it is lowered by the cooling effect of the oil passing through the coils 25 to approximately 350 degrees Fahrenheit to provide the proper consistency for extrusion upon and around the pipe or tube. It will be understood that the various materials require different extruding temperatures; therefore I do not wish to be limited to the above temperature.

By proper manipulation of the heating elements 35 and cooling coils 26 the temperature of the oil flowing into the coils 25 may be used to provide a critical temperature of the coating to be extruded onto the pipe.

It will, of course, be understood that other means than the coils 25 may be provided for controlling the temperature of the asphalt composition being extruded.

It will also be understood that if necessary or desirable mechanical means may be provided for forcing the coating material out of either the priming or coating nozzles, and that various other changes in the design and operation of the apparatus may be made to facilitate the carrying out of the several steps of this invention.

It will also be understood that I do not wish to be limited to the specific steps of the method described, nor to the use of asphalt coatings, since various other materials may be used and the steps of the method may be modified within the scope of the appended claims without departing from my invention.

I claim:

1. The method of protecting the exterior surfaces of metal pipes which consists in heating said pipes to at least 212 degrees Fahrenheit, applying a thin priming coat of a molten composition of asphalt to the pipe, then immediately thereafter applying a heavy layer of plastic composition of asphalt over said priming coat, then spraying said coated pipe with water to set and harden said composition, and finally applying a layer of protective material over said asphalt, said last named material being non-destructive and non-softening at elevated atmospheric temperatures.

2. The method of protecting the exterior surfaces of metal pipes which consists in heating said pipes to at least 212 degrees Fahrenheit, extruding a thin priming coat of a molten composition of asphalt onto the heated pipe, then immediately thereafter extruding a heavy layer of a plastic asphalt composition onto the pipe over said priming coat, and then spraying said coated pipe with fluid or finely pulverized materials to set and harden the asphalt composition.

3. The method of protecting the exterior surfaces of metal pipes which consists in heating said pipes to at least 212 degrees Fahrenheit, extruding a thin priming coat of a molten composition of asphalt onto the heated pipe, then immediately thereafter extruding a heavy layer of a plastic asphalt composition onto the pipe over said priming coat, then spraying said coated pipe to set and harden the asphalt composition, and finally applying a layer of protective material over said asphalt, said last named material being non-destructive and non-softening at elevated atmospheric temperatures.

4. The method of protecting the exterior surfaces of metal pipes which consists in heating said pipes, applying a thin priming coat of a molten composition of asphalt to the pipe, then immediately thereafter applying a heavy layer of plastic composition of asphalt over said priming coat, then cooling said coated pipe to set and harden said composition, and finally applying a layer of protective material over said asphalt, said last named material being non-destructive and non-softening at elevated atmospheric temperatures.

5. The method of protecting the exterior surfaces of metal pipes which consists in heating said pipes, applying a priming coat of flowable material to said pipe, then extruding a heavy layer of plastic composition onto the primed pipe, allowing said plastic composition to set and harden, and finally applying a layer of protective material over said asphalt, said last named material being non-destructive and non-softening at elevated atmospheric temperatures.

6. The method of protecting the exterior surfaces of metal articles such as pipes and the like which consists in heating said articles to such a degree that substantially all moisture will be dried from the article, applying a heavy layer of plastic composition of asphalt over the article, then spraying the coated article with fluid or finely pulverized materials to set and harden the coating of asphalt composition, and finally applying a layer of protective material over said asphalt, said last named material being non-destructive and non-softening at elevated atmospheric temperatures.

7. The method of protecting the exterior surfaces of metal articles such as pipes and the like which consists in applying a priming coat of flowable material to said article, then extruding the heavy layer of plastic composition onto the primed article, allowing said plastic composition to set and harden, and finally applying a layer of protective material over said asphalt, said last named material being non-destructive and non-softening at elevated atmospheric temperatures.

LORENZ HENRY WILSON.