PCT WORLD INTELLECTUAL PROPERTY ORGANIZATION
International Bureau

INTERNATIONAL APPLICATION PUBLISHED UNDER THE PATENT COOPERATION TREATY (PCT)

(51) International Patent Classification 5 :
A61F 13/00, 2/00, A61K 31/725
A61K 37/00, 31/40, 9/22

A1

(11) International Publication Number: **WO 91/07154**

(43) International Publication Date: 30 May 1991 (30.05.91)

(21) International Application Number: PCT/US90/06628

(22) International Filing Date: 13 November 1990 (13.11.90)

(30) Priority data:
436,337 13 November 1989 (13.11.89) US

(60) Parent Application or Grant
(63) Related by Continuation
US 436,351 (CIP)
Filed on 14 November 1989 (14.11.89)

(71) Applicant *(for all designated States except US):* PRESIDENT AND FELLOWS OF HARVARD COLLEGE [US/US]; 17 Quincy Street, Cambridge, MA 02138 (US).

(72) Inventors; and
(75) Inventors/Applicants *(for US only) :* EDELMAN, Elazer, R. [-/US]; 45 Longwood Avenue, Apt. 308, Brookline, MA 02146 (US). ADAMS, David, H. [-/US]; 66 Chestnut Street, Boston, MA 02108 (US). KARNOVSKY, Morris, J. [-/US]; 61 Miller Road, Newton Centre, MA 02159 (US).

(74) Agent: FREEMAN, John, W.; Fish & Richardson, One Financial Center, Suite 2500, Boston, MA 02111-2658 (US).

(81) Designated States: AT (European patent), AU, BE (European patent), CA, CH (European patent), DE (European patent), DK (European patent), ES (European patent), FI, FR (European patent), GB (European patent), GR (European patent), IT (European patent), JP, KR, LU (European patent), NL (European patent), NO, SE (European patent), US.

Published
With international search report.

(54) Title: EXTRALUMINAL REGULATION OF THE GROWTH AND REPAIR OF TUBULAR STRUCTURES IN VIVO

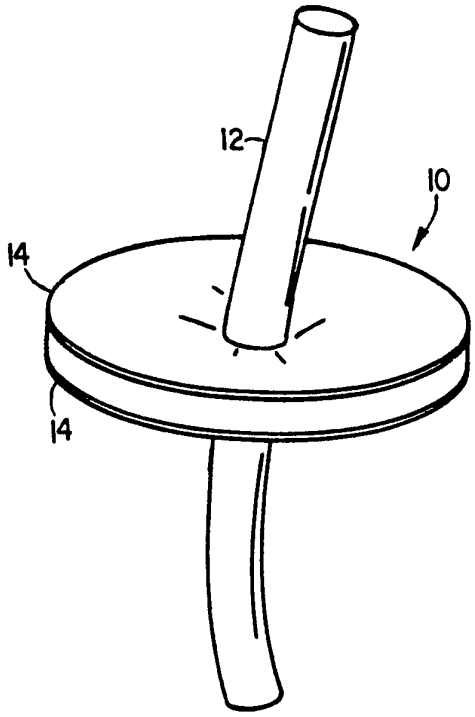

(57) Abstract

A method of regulating repair in a physiological system following injury to the lumen of a tubular structure in that system, and of testing the effectiveness of regulatory agent, is presented. The method includes administering a modulator of cell or tissue growth to an extraluminal site adjacent the injured tissue in a diffusion controlled-release polymer body which has either a toroidal or disc structure. The polymer body (10) contains a centrally located hole through which suture (12) is threaded. The polymer body (10) has an outer coating (14).

FOR THE PURPOSES OF INFORMATION ONLY

Codes used to identify States party to the PCT on the front pages of pamphlets publishing international applications under the PCT.

AT	Austria	**FI**	Finland	**ML**	Mali
AU	Australia	**FR**	France	**MN**	Mongolia
BB	Barbados	**GA**	Gabon	**MR**	Mauritania
BE	Belgium	**GB**	United Kingdom	**MW**	Malawi
BF	Burkina Faso	**GN**	Guinea	**NL**	Netherlands
BG	Bulgaria	**GR**	Greece	**NO**	Norway
BJ	Benin	**HU**	Hungary	**PL**	Poland
BR	Brazil	**IT**	Italy	**RO**	Romania
CA	Canada	**JP**	Japan	**SD**	Sudan
CF	Central African Republic	**KP**	Democratic People's Republic of Korea	**SE**	Sweden
CG	Congo			**SN**	Senegal
CH	Switzerland	**KR**	Republic of Korea	**SU**	Soviet Union
CI	Côte d'Ivoire	**LI**	Liechtenstein	**TD**	Chad
CM	Cameroon	**LK**	Sri Lanka	**TG**	Togo
DE	Germany	**LU**	Luxembourg	**US**	United States of America
DK	Denmark	**MC**	Monaco		
ES	Spain	**MG**	Madagascar		

EXTRALUMINAL REGULATION OF THE GROWTH AND REPAIR OF TUBULAR STRUCTURES IN VIVO

Background of the Invention

This invention relates to the general field of regulation of the growth and repair of tubular, or luminal, structures.

Tubular structures within the body (including bronchi of the lung, the entire gastrointestinal tract from the esophagus to the anus, the ureters and urethra of the genitourinary system, the fallopian tubes and vas deferens of the reproductive system, and the blood vessels) are all subject to luminal constriction and obstruction to flow. As a result, tissues and organs downstream of the obstruction are deprived of vital elements and tissues and organs upstream are dammed up with fluid and/or toxic products.

Surgical repair is often indicated in an attempt to relieve these obstructions. However, the repair may be unsuccessful or short-lived due to accelerated obstruction and a recurrence of the events that led to the initial crisis. Overproliferation of smooth muscle cells (SMC) as part of the natural repair process may contribute to luminal occlusion. In the arterial system, for example, restenosis rates of 25 to 35% have been noted within three months following percutaneous balloon angioplasty, and current estimates of the life expectancy of saphenous venin bypass grafts do not exceed 7 years. In the gastrointestinal system, this same phenomenon presents as recurrent bowel obstruction after lysis of adhesions or surgical anastomotic repair, and in the reproductive system as an ineffective surgical repair of the fallopian tubes or vas deferens.

There have been various attempts to limit occlusion. For example, for blood vessels, effort has been directed at various circulating (intravenous) factors such as heparin. Such factors inhibit or stimulate the clotting process and may also affect smooth muscle cell proliferation. Attempt have also been made to control environmental factors such as blood pressure, cholesterol, or smoking (nicotine). As regards lungs, attempts to limit occlusion have been directed at aerosolized factors and modulators of vascular tone (e.g., bronchodialators) and control of mucous formation. Efforts concerning the genitourinary system have focused on maintaining adequate flow, e.g. by controlling pH to enhance the solubility of stone material or by mechanical means such as ultrasound energy to break-up stones or uretal stents.

Summary of the Invention

In general, one aspect of the invention features a method of regulating repair following injury to luminal tissue that includes administering a modulator of cell or tissue growth at an extraluminal site adjacent the injured tissue. "Regulating repair" is meant to include controlling luminal occlusion (e.g., the reduction or the prevention of formation of such occlusion). By luminal tissue is meant the tissue, primarily endothelium, in the lumen of a tubular structure. A modulator is an agent that effects a change in the rate of cell or tissue growth. An extraluminal site is one located outside and adjacent to the injured tubular structure, one example being the adventitia, the layer of loose connective tissue forming the outermost coating of an organ.

Preferred embodiments of the invention include the following features. The invention is particularly appropriate for controlling repair of the vascular system, preferably repair of an artery, and the preferred

modulating agent is either anticoagulant or non-anticoagulant heparin. The modulator preferably is delivered to the adventitia adjacent the artery in a polymer matrix (e.g., an ethylene-vinyl acetate copolymer), at a rate of from 1μg to 100mg/day, for a period of at least 24 hours. Other sites of injury for which the method is particularly appropriate include the fallopian tubes or the vas deferens of the reproductive system, the ureter or the prostate gland of the genitourinary system, the bowel of the gastrointestinal system, or the trachia or the bronchial tree of the pulmonary system. Other vehicles for administration include aqueous gels, foams, or sprays (e.g. aerosolized).

In another aspect, the invention generally features a method of testing the effectiveness of a modulator in regulating repair following injury to luminal tissue that includes administering the modulator to an extraluminal site adjacent the tissue and determining the extent of regulation of repair following such administration.

Local administration of a modulating agent to an extraluminal site adjacent an injured luminal structure or organ allows for orderly repair of the injured endothelium while reducing detrimental side effects of other forms of administration.

Another aspect of the invention features a controlled release polymer device that includes a capillary action release optimizing element that may also serve to immobilize the device at a local site, e.g. to the outside of a lumen. The device comprises a controlled release polymer matrix (such as one described above) loaded with a drug, e.g., a cell-growth modulating agent according to the invention. The device is configured as a solid encasing a portion of the release

optimizing element, which is configured as an elongated fibrous suture and preferrably is made from a material that supports capillary action and is suitable for immobilizing the polymer body. The release optimizing element may take the form of a suture (made from standard suturing materials) which itself is not impregnated with drug. Preferably, the outer solid surfaces are coated to retard release of the modulator from coated surfaces. Also preferably, the polymer is shaped as a torroidal structure or a disc with a generally central opening (preferably the opening is a hole extending completely through the polymer body) containing the release element. This aspect of the invention is particularly adapted to matricies that provide diffusion controlled release. This aspect of the invention provides various advantages. The element is firmly anchored. The wicking effect of the element increases efficiency by reducing the total amount of drug residing in the matrix when release effectively ends. The kinetics of release (rate of release over time) is more stable.

Other features and advantages of the invention will be apparent from the following description of the preferred embodiment thereof, and from the claims.

Description of the Preferred Embodiment

The method of the invention permits local administration of a modulator of cell or tissue growth to the outside of a tubular (or luminal) physiological structure for the purpose of regulating the repair of that structure following injury, for example, by surgical procedures. Examples of systems containing such structures and typical surgical procedures where regulating the repair process would be valuable are the vascular system (e.g., vascular anastomses that accompany procedures such as organ transplant, coronary by-pass surgery, systemic arterio-arterio and arterio-venus

bypass surgery, and arterio-venus shunts that accompany vascular access for dialysis); the reproductive system (reversal of tubal ligation or vasectomy); genitourinary system (prostate surgery); gastrointestinal system (anastomotic repair of a bowel obstruction); and the pulmonary system (repair or reconstruction of traumatic or surgical injury to trachial or bronchial structures).

A wide range of growth modulating agents are appropriate for use in carrying out the method of the invention including those indicated as affecting angiogenesis, smooth muscle cell proliferation or vascularization. Some examples (as described in more detail below) include: heparin; the angiotensin converting enzyme inhibitors (e.g., captopril); angiotensin; angiogenic growth factors; heparin binding growth factors (See U.S. Patent 4,882,275), particularly fibroblast growth factor; platelet derived growth factor (PDGF); transforming growth factor-β (TGF-β); immunosupressants (e.g., cyclosporine); calcium channel inhibitors (e.g., nifedipine); as well as cytokines and interleukins which control cell-cell interaction during vascular or other luminal tissue repair in response to injury.

The modulator may be delivered to the appropriate site outside the tubular structure of interest in a delivery system, e.g., a matrix composed of the modulator in solid form and a polymer, such as an ethylene-vinyl acetate copolymer (described in detail below). The polymer matrix delivery system can be made from any generally inert biocompatible polymer material. The material can be formed in a matrix as described below, or it can be in capsule form or other known controlled release configurations. Desired kinetics for the release of a particular drug can be achieved by known techniques

by controlling the matrix fabrication techniques or the nature of the polymer of the delivery system.

A polymer matrix system to deliver the modulating agent is particularly useful when the substance to be delivered is unstable in solution, rapidly degraded, prone to precipitation, or of limited solubility. Alternate delivery systems which may be especially appropriate for modulating agents include bioerodible systems such as polyorthoester systems described in Sparer et al., J. Controlled Release 1: 23-32 (1984); poly (glycolide-CO-DL-lactide) microcapsules disclosed in Lawter et al., Proc. Int'l. Symp. Control. Rel. Bioact. Mater. 14: 99-100 (1987); and poly (organophosphazene) bound drugs as disclosed by Neenan and Allcock, Biomaterials 3: 78-80 (1982), and Grolleman et al., J. of Controlled Release 3: 143-154 (1986).

A particularly preferred polymer release matrix is the ethylene-vinyl acetate copolymer (EVAc) matrix described in Folkman and Langer U.S. Pat. No. 4,391,797, hereby incorporated by reference.

A particularly preferred cell and tissue growth modulating agent is heparin, an α,β-glucosidically linked, highly sulfated copolymer of uronic acid and glucosamine. Preparations are polydisperse with a molecular weight range of from 5,000-40,000 daltons. The precise composition of commercial heparin and the precise degree of antiproliferative activity vary depending on the source and method of purification. By the term "heparin," we mean to include all forms of heparin and all fragments of heparin having an antiproliferative effect, e.g., both anticoagulant heparin and non-anticoagulant heparin (e.g., heparin that is identified by its failure to bind to an anti-thrombin III affinity column) have antiproliferative activity. Other well known methods of preparing non-anticoagulent heparin

include modification of native heparin by periodate oxidation or by enzymatic degradation, and de novo synthesis.

To establish loading of a matrix, drug release in vivo from the matrix (e.g. an EVAc matrix) is assumed to mirror release in vitro (Brown et al., J. Pharm. Sci. 72:1181-1185 (1983)). The maximum number of units of modulator to be applied directly to the extraluminal tissue (e.g., an arterial wall) can be estimated by using in vitro release data. Animal models such as those described below provide a dose response curve. To scale up from animal to human delivery, e.g., in human arteries, one considers only the difference in luminal diameter (e.g., scaling up from rat to human vessel diameter involves a factor of approximately four to ten-fold). Because achieving systemic effects is not desired, body weight does not enter into the calculation.

At the time of surgical intervention of a typical surgical procedure, the polymer matrix embedded with the modulator is placed at an extraluminal site (e.g., in the adventitia) adjacent the injured lumen (e.g., artery) and the adjacent muscles and facia are sutured closed to insure immobilization of the matrix. During recovery of the patient, fluid is absorbed by the matrix and solubilizes the modulator, which then diffuses in solution through the channels of the matrix and out into the adventitia. Positioning of the matrix in the adventitia assures that heparin delivery takes place at the exterior surface of the blood vessel wall, at the site of injury.

The following examples of specific procedures, modulators and delivery systems used in animal models are provided to illustrate and not to limit the invention.

Example 1

Heparin, particularly non-anticoagulent heparin, can be administered to an artery from an EVAc slow release matrix according to the following example.

An EVAc matrix loaded with 0.1-1000mg (most preferably 0.5-500mg) non-anticoagulent heparin is prepared as described below. As part of the surgical procedure, (e.g. coronary by-pass or coronary valve replacement) the matrix is sutured in the adventitia adjacent the artery. The adjacent muscles and facia are sutured closed to immobilize the matrix adjacent the arterial repair. The heparin is released at a rate of 1μg-100mg/day, for more than one (preferably more than three, and most preferably more than seven) days.

Example 2

Anti-coagulant (AC) heparin (Choay Heparin 1453, m.w. 12,000-18,000 dalton, U.S.P. 160 U/mg, in vitro antiproliferative activity 80% (as described by Castellot et al. (1987) Seminars in Thrombosis and Hemostasis 13:489-503) or non-anti-coagulant (NAC) heparin (Choay heparin 1772, m.w. 5000-8000 dalton, U.S.P. 10 U/mg, in vitro antiproliferative activity 80%), Choay Institute, Paris, France, were embedded in polymer matrices using a solvent casting technique as described in Langer et al., Methods in Enzymol. 112:399-423 (1985). First, ethylene-vinyl acetate copolymer (ELVAX-40P, 40% vinyl acetate, E.I. DuPont, Wilm., Del. or U.S.I. of Cincinnati, Ohio) was dissolved in methylene chloride to a concentration of 10% (w/v). Dry powdered heparin was then sieved to particle sizes less than 180 microns and added to the EVAc solution. If the heparin aggregated, the drug was dissolved in normal saline, lyophylized to a powder, pulverized with mortar and pestle in a humidity controlled box and then sieved and added to the dissolved EVAc. The drug-polymer suspension was vortexed, let stand for 15 seconds to allow air bubbles to settle out

and then poured into glass molds that had been precooled on dry ice. At these temperatures, the heparin was immediately frozen in place so as to be uniformly distributed through the matrix and not settle on the bottom. The resultant matrix was a homogeneous dispersion of heparin within EVAc. Once hardened, the matrices were removed from their glass molds, placed in a -20° C freezer for two days and then under vacuum (600 mtorr) for another two days.

For use, smaller pellets were cut from the larger slabs to specific sizes and weights, and a coating was applied by placing a 20 gauge intravenous needle one cm into the center of the face of the matrix pellet and then immersing the pellet in a solution of 10% EVAc dissolved in methylene chloride for 5 seconds. As the pellets were withdrawn from the solution, they were spun slowly for a minute to allow for uniform coating. This entire process was repeated twice more. The matrices were left on the needles and placed in a chemical fume hood to allow for further solvent evaporation. After 12 hours, the extraneous polymer material that had migrated up the needle was removed by spinning a tweezers around the base of the needle as it was withdrawn from the matrix pellets. This insured that the extra polymer material did not collapse over the hole and that the hole remained open. Matrices were stored in a dessicator where solvent evaporation continued to completion.

Male Sprague-Dawley rats (300-500 gm, Charles River Breeding Laboratories, Wilmington, MA) were anesthetized with sodium nembutol 0.5 mg/gm body weight, and supplemental anesthesia was maintained with ether inhalation. A midline incision was made from the mandible to the mid-sternum. The carotid artery was exposed along the length of the bifurcation with blunt dissection, and the external carotid artery was isolated

and ligated in its cephalad portion. A 2 French Fogarty balloon catheter (American Edwards Laboratories, Santa Ana, CA) was introduced into the arteriotomy of the external carotid artery and passed in its inflated state over the endothelium of the common carotid artery three times. The catheter was then deflated and removed from the external carotid artery, which was then ligated. In different groups of animals, EVAc matrices containing no drug, AC heparin or NAC heparin were placed adjacent to the injured artery. The adjacent muscles and fascia were sutured closed with 4-0 nylon suture to insure immobilization of the pellet. The midline incision was closed with the same suture and animals observed in separate cages during recovery. As a control, to demonstrate that the effect at issue is specific for adventitial or extraluminal delivery, EVAc matricies were placed in a subcutaneous pocket over the animal's dorsal neck region. In other animals, an osmotic infusion pump (ALZA Corporation, Palo Alto, CA) provided continuous iv administration of these same agents. The pump♦5Xwaplaced in a pocket made in the neck of the rat, and a silastic catheter extended from the pump to the right internal jugular vein. AC and NAC heparins were mixed in lactated Ringer's solution and delivered at 0.3 mg per kilogram of body weight per hour. Control animals received lactated Ringer's infusion. The overall doses of the drugs administered are displayed in Table I.

TABLE I

HEPARIN DOSAGE mg (over 14 days)

		MATRICES	
	INTRAVENOUS	CAROTID	DORSAL
NAC	(5) 25.9-43.3*	(10) 19.5 ± 1.9	(5) 18.5 ± 2.9
AC	(5) 25.9-43.3*	(8) 8.1 ± 1.9	(4) 7.1 ± 0.2

* set to 0.3 mg/kg/hr and dictated by the size of the animal numbers in parentheses represent the number of animals in each group

As an indication of anti-coagulation activity, activated partial thromboplastin times (aPTT) were determined within the first 24-36 hours after the procedure and at day 14. To observe the percent of luminal occlusion, animals were euthanized while undergoing intravascular fixation perfusion using methods described in A.W. Clowes et al., Lab. Invest. 49:327 et seq. (1983). Photomicrographs of all arterial sections were obtained, and the percent of luminal occlusion was calculated for each arterial segment using computerized digital planimetry. Specifically, the natural lumen boundary is apparent by photomicroscopy. The boundary is extended inwardly by inclusions. Digital planimetry is used to provide a measure of the cross-sectional area of the natural lumen boundary, divided into the area of the inclusion, yielding percent occlusion.

Anti-coagulation activity as given by the aPTT (Table II) and extent of luminal occlusion (Table III), for each animal group, are detailed below.

TABLE II

aPTT (sec)

	MATRICES		
	INTRAVENOUS	CAROTID	DORSAL
CONTROL	(6) 16.2 ± 0.1	(8) 16.5 ± 0.4	
NAC	(5) 18.4 ± 0.6	(10) 15.0 ± 0.4	(5) 17.5 + 0.5
AC	(5) 40.0 ± 11.8*	(8) 15.3 ± 0.1	(4) 17.0 ± 1.0

numbers in parentheses represent the number of animals in each group
statistical significance compared with corresponding controls: * p<0.0005

TABLE III

LUMINAL OCCLUSION (%)

	MATRICES		
	INTRAVENOUS	CAROTID	DORSAL
CONTROL	(6) 52.2 ± 4.2	(8) 55.9 ± 4.3	
NAC	(5) 46.4 ± 3.9	(10) 17.7 ± 3.78@	(5) 45.0 + 2.0
AC	(5) 16.8 ± 4.3**	(8) 9.4 ± 2.6*	(4) 28.0 ± 2.6

numbers in parentheses represent the number of animals in each group
statistical significance compared with corresponding controls:
*p<0.0005, ** p<0.0003, @ p<0.0001

Referring to Table II, only the intravenous administration of AC heparin produced systemic anti-coagulation. Neither the local matrix delivery of either heparin, in subcutaneous or adventitial positions, nor

the intravenous infusion of NAC heparin had any discernable effect on clotting function. None of the animals in any groups suffered from excessive bleeding. Referring to Table III, intravenous AC heparin infusion reduced luminal occlusion 68%, from a control value of 52.2 to 16.8%. NAC heparin delivered in the same fashion achieved only an 11% reduction (no statistical difference in comparison to control). Subcutaneous matrix delivery of NAC heparin also showed no significant difference in luminal occlusion, but similar delivery of AC heparin reduced occlusion by 52%. The largest effect on luminal occlusion was observed with adventitial delivery. Occlusion was reduced from 55.9% to 9.4% (83% reduction) in animals with AC heparin matrices, and to 17.7% (68% reduction) in animals with NAC heparin matrices.

Example 3

To generate a dose response curve for NAC heparin, twelve rats were implated with NAC heparin-bearing matrices of different net weights so as to deliver different dosages of heparin over the 14 day period. As the dose of the NAC heparin was increased, the effect on SMC proliferation rose, such that at the highest dose tested, NAC heparin inhibited SMC proliferation to an equal extent as AC heparin, at five times the equivalent dose. A dose response experiment was not performed for AC heparin as the amount of heparin delivered in the uniform dose study was already low and had achieved over 80% inhibition of SMC proliferation.

At a rate of about 0.8mg/day for in vitro release, the maximum amount of heparin human arteries would be exposed to would be no higher than 20-50 units/hour, and systemic levels would be undetectable. This is in marked contrast to the 1000-1500 units/hour of i.v. infusion currently used in clinical practice for systemic anticoagulation.

In vitro release kinetics were defined for five flat slab (15, 30 or 50% heparin:EVAc w/w), and for five slabs coated with plain EVAc (at 15 or 30% concentration) with a hole drilled into one face.Uncoated matrices exhibited first order release kinetics with the bulk of the drug eliminated in the first 24 to 48 hours. At higher matrix concentrations, heparin was released more rapidly and to a greater extent. When a coating was applied and release constrained to emanate from a hole drilled into the coated polymer face, the initial burst of release was eliminated but overall amount delivered sustained.

Example 4

Angiotensin-converting enzyme inhibitors have a profound effect in lowering blood pressure, primarily through vasodilation. Independent of this hemodynamic effect, the most potent compounds in this class have been shown to inhibit luminal occlusion from smooth muscle cell proliferation during repair following balloon injury when administered orally (Powell et al., Science 245: 186-189, 1989).

The local, extraluminal action of the least potent of this class of agents, captopril, was studied in the balloon injury/polymer matrix/ adventitial delivery model described above. Powdered captopril (Capoten®, Squibb Pharmaceuticals) was embedded within EVAc matrices at 50% loading and delivered at a dosage of 10.79 $\pm$ 0.1 mg, over the course of 14 days, to the adventitia of the carotid artery. The percent of luminal occlusion was 37.7 $\pm$ 3.0.

Example 5

Angiotensin II (AII) has been demonstrated to have both inhibitory and stimulatory effects on SMCs in tissue culture and has also been demonstrated to induce blood vessel growth in avascular structures such as the the rabbit cornea, independent of its hemodynamic effects.

Matrices of ethylene-vinyl acetate copolymer were embedded with AII and sustained first order release demonstrated for more than one month. As the drug is potent in ng quantities, the EVAc matrix drug embedding technique was modified to include bovine serum albumin (BSA) as a carrier compound. When dry powdered AII was mixed with dry powdered BSA in a 1 to 500 ratio and then embedded within a EVAc matrix, the rate of BSA release dictated the rate of AII release. When this system was then placed in the balloon injury model described above, the vascular occlusion was noted and the number of blood vessels surrounding the implant counted and compared to control.

DOSE: 17 μg over the course of 14 days
LUMINAL OCCLUSION: 22.5 - 64%
INHIBITION COMPARED TO CONTROL: 0 - 62.6%
NUMBER OF VESSELS SURROUNDING AII IMPLANT: 27
NUMBER OF VESSELS SURROUNDING CONTROL IMPLANT: 6

Angiotensin II was able to induce a marked vascular response regardless of its ability to control SMC proliferation.

Example 6

Heparin binding growth factors such as fibroblast growth factor (FGF) in culture are mitogens for a number of cell types and a potent angiogenesis factor in vivo that has no apparent effect on blood pressure. As growth factor activity may be lost if the factor is embedded in standard controlled release devices, an alternative method was used, taking of advantage the inherent ability of such growth factors to adhere to heparin.

FGF (Takeda Industries, Japan) was bound to heparin sepharose beads to stabilize the factor and to provide a solid carrier for minute quantities of the liquid growth factor. Aliquots of FGF were mixed with 2 ml of I^{125}FGF (1.2 mg/ml) and then incubated for 1 hour

with the heparin sepharose beads. Subsequent release of FGF from the beads was followed in 0.15 M NaCl buffer. Microspheres containing FGF were constructed by dropping a mixture of sodium alginate (1%) with heparin sepharose bead-bound FGF through a glass Pasteur pipette into a hardening solution of calcium chloride (1.5 weight %). Release kinetics were determined for microcapsules containing 6 ml of FGF and 2 ml of I^{125}FGF bound to 125 mg of the heparin sepharose beads in 500 ml of 0.15 M NaCl. Heparin sepharose bead-laden FGF was incorporated within alginate microcapsules with 74% efficiency, and release of the FGF over time was retarded and prolonged in comparison to release from the unencapsulated beads. Bioactivity was retained by 87.6 $\pm$ 12% of the factor preparation. Microspheres prepared as above were placed adjacent to noninjured and balloon endothelialized carotid arteries. In both blood vessels a significant increase in local vascularity was noted.

In addition to the examples described above, the method can be used in a laboratory setting to test the luminal repair-enhancing effect of a variety of potentially potent cell or tissue growth modulators previously discarded as ineffective because they do not act systemically, do not act in a similar fashion over a range of dosages, are degraded before they achieve their effects if applied systemically, or have side effects when delivered systemically.

Fig. 1 is a highly diagrammatic representation of a torroidal structure (Fig. 1A) and (Fig. 1B) a disc according to the invention comprising a diffusion-controlled-release polymer body containing a drug. The polymer body 10 contains a centrally located hole through which suture 12 is threaded. The polymer body 10 has an outer coating 14 (e.g. if the polymer is a drug-loaded

EVA matrix as described in U.S. Patent 4,391,797, unloaded polymer can be used for the coating.

Other embodiments are within the following claims.

Claims

1. A method of regulating repair following injury to luminal tissue, said method comprising administering a modulator of cell or tissue growth at an extraluminal site adjacent said injured tissue.

2. The method of claim 1 wherein said tissue comprises a portion of the vascular system.

3. The method of claim 2 wherein said tissue comprises an artery.

4. The method of claim 1 wherein said tissue comprises a portion of the reproductive system.

5. The method of claim 4 wherein said tissue comprises a fallopian tube.

6. The method of claim 4 wherein said tissue comprises the vas deferens.

7. The method of claim 1 wherein said tissue comprises a portion of the genitourinary system.

8. The method of claim 7 wherein said tissue comprises the ureter or the prostate gland.

9. The method of claim 1 wherein said tissue comprises a portion of the gastrointestinal tract.

10. The method of claim 9 wherein said tissue comprises the bowel.

11. The method of claim 1 wherein said tissue comprises a portion of the pulmonary system.

12. The method of claim 1 wherein said tissue comprises the trachia or the bronchial tree.

13. The method of claim 1 wherein said modulator comprises anticoagulant heparin.

14. The method of claim 1 wherein said antiproliferative agent comprises non-anticoagulant heparin.

15. The method of claim 1 wherein said modulator comprises an angiotensin converting enzyme inhibitors.

16. The method of claim 1 wherein said modulator comprises a heparin binding growth factor.

17. The method of cliam 1 wherein said modulator comprises any one of: captopril, angiotensin II, or fibroblast growth factor.

18. The method of claim 1 wherein administering said modulator comprises

delivering said modulator in a vehicle to said extraluminal site.

19. The method of claim 16 further comprising causing said modulator be released from said vehicle.

20. The method of claim 16 wherein said vehicle comprises a polymer matrix.

21. The method of claim 16 wherein said vehicle comprises an aqueous gel, foam, or spray.

22. The method of claim 16 wherein said vehicle is an infusion pump.

23. The method of claim 20 wherein said polymer comprises ethylene-vinyl acetate copolymer.

24. A method of controlling luminal occlusion following vascular injury, said method comprising

administering anticoagulant or non-anticoagulant heparin to the adventitia adjacent a site of vascular injury.

25. The method of claim 24 wherein administering said heparin comprises delivering said herapin in a polymer matrix to said adventitial space.

26. The method of claim 25 wherein said heparin is administered at a rate of from 1μg to 100mg/day, for a period of at least 24 hours.

27. A method of testing the effectiveness of a modulator in regulating repair following injury to luminal tissue, said method comprising

administering said modulator to an extraluminal site adjacent said tissue and

determining the extent of regulation of repair following said administering.

28. A controlled release device adapted for suturing to a site for localized release, said release device comprising a controlled release polymer containing a drug to be released, a portion of a capillary action

release optimizing element being encapsulated in said matrix.

29. The device of claim 28 wherein said polymer matrix is formulated to provide diffusion controlled release of said drug.

30. The device of claim 28 wherein said polymer matrix is configured as a solid, outer surfaces of which are coated to retard release of the drug.

31. The device of claim 30 wherein the device is adapted for immobilization to the outside of a lumen in a human patient by means of said release optimizing element.

32. The device of claim 28 or claim 31 wherein the drug is a cell growth modulating agent.

33. The device of claim 28 wherein the polymer matrix is configured as a torroidal structure having a generally central opening containing the release optimizing element.

34. The device of claim 28 wherein the polymer matrix is a disc comprising a generally central opening containing the release optimizing element.

35. The device of claim 33 or claim 34 wherein said hole and release optimizing element extend completely through said matrix.

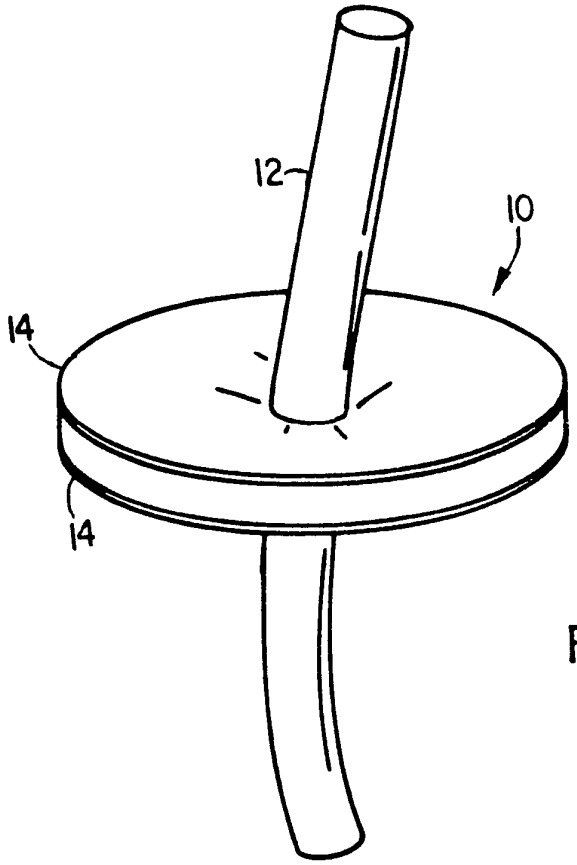

FIG. 1A

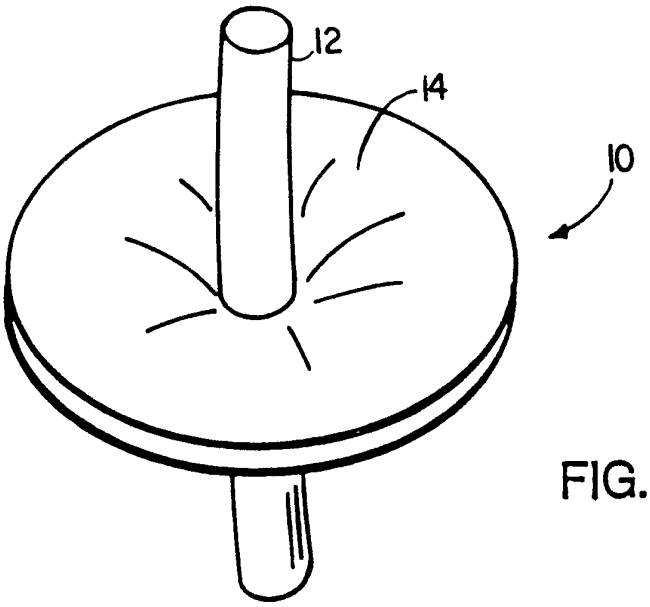

FIG. 1B

INTERNATIONAL SEARCH REPORT

International Application No T/US90/06628

I. CLASSIFICATION OF SUBJECT MATTER (if several classification symbols apply, indicate all) 3

According to International Patent Classification (IPC) or to both National Classification and IPC

IPC (5): A61F 13/00, 2/00; A61K 31/725, 37/00, 31/40, 9/22
U.S. CL. 424/422

II. FIELDS SEARCHED

Minimum Documentation Searched 4

Classification System	Classification Symbols
U.S.	424/422, 423; 514/56, 423, 12; 604/892.1

Documentation Searched other than Minimum Documentation to the Extent that such Documents are Included in the Fields Searched 6

III. DOCUMENTS CONSIDERED TO BE RELEVANT 14

Category.*	Citation of Document, 16 with indication, where appropriate, of the relevant passages 17	Relevant to Claim No. 18
X	US, A, 4,808,402 (LEIBOVICH) 28 FEBRUARY 1989; See column 1, lines 20-26, column 7, lines 53-58, column 8, lines 38-55, column 9, lines 12-21 and claim 10.	1-3, 17-21
Y	JOURNAL OF CELLULAR PHYSIOLOGY Vol. 120, 1984, COSTELLOT, JR. See Abstract.	13,14,24-26
Y	SCIENCE, Vol. 245, 14 JULY 1989, POWELL, See Abstract, page 187 and column 3, 3rd paragraph.	15 & 17
Y	O'REILLY, "The Pharmacologic Basics Of Therapeutics", 1985, by McMillian Publishing Co. See page 1342, column 2.	
Y	US, A, 3,797,485 (URQUHART) 19 MARCH 1974 See Abstract, column 1, line 33, column 10, lines 38-39, and column 11, line 43 et seq.	1-3, 18-20, 23, 28-35
Y	Minerva Cardioangiologica, Vol. 21, 1973, page 553, see Abstract.	21

* Special categories of cited documents: 15

"A" document defining the general state of the art which is not considered to be of particular relevance

"E" earlier document but published on or after the international filing date

"L" document which may throw doubts on priority claim(s) or which is cited to establish the publication date of another citation or other special reason (as specified)

"O" document referring to an oral disclosure, use, exhibition or other means

"P" document published prior to the international filing date but later than the priority date claimed

"T" later document published after the international filing date or priority date and not in conflict with the application but cited to understand the principle or theory underlying the invention

"X" document of particular relevance; the claimed invention cannot be considered novel or cannot be considered to involve an inventive step

"Y" document of particular relevance; the claimed invention cannot be considered to involve an inventive step when the document is combined with one or more other such documents, such combination being obvious to a person skilled in the art.

"&" document member of the same patent family

IV. CERTIFICATION

Date of the Actual Completion of the International Search 2	Date of Mailing of this International Search Report 2
18 DECEMBER 1990	06FEB 1991
International Searching Authority 1	**Signature of Authorized Officer 20**
ISA/US	Thurman K. Page

Form PCT/ISA/210 (second sheet) (May 1986)

FURTHER INFORMATION CONTINUED FROM THE SECOND SHEET

V. ☐ OBSERVATIONS WHERE CERTAIN CLAIMS WERE FOUND UNSEARCHABLE [1]

This international search report has not been established in respect of certain claims under Article 17(2) (a) for the following reasons:

1. ☐ Claim numbers . because they relate to subject matter [2] not required to be searched by this Authority, namely:

2. ☐ Claim numbers , because they relate to parts of the international application that do not comply with the prescribed requirements to such an extent that no meaningful international search can be carried out [3], specifically:

3. ☐ Claim numbers_____, because they are dependent claims not drafted in accordance with the second and third sentences of PCT Rule 6.4(a).

VI. ☒ OBSERVATIONS WHERE UNITY OF INVENTION IS LACKING [2]

This International Searching Authority found multiple inventions in this international application as follows:

Invention I: Claims 1-26 & 28-35: A method of regulating repair following injury and a controlled release device.
Invention II: Claim 27: A method of testing the effectiveness of a modulator. (See Attachment)

1. ☐ As all required additional search fees were timely paid by the applicant, this international search report covers all searchable claims of the international application.

2. ☐ As only some of the required additional search fees were timely paid by the applicant, this international search report covers only those claims of the international application for which fees were paid, specifically claims:

3. ☒ No required additional search fees were timely paid by the applicant. Consequently, this international search report is restricted to the invention first mentioned in the claims; it is covered by claim numbers:

1-3, 13-26 and 28-35

4. ☐ As all searchable claims could be searched without effort justifying an additional fee, the International Searching Authority did not invite payment of any additional fee.

Remark on Protest

☐ The additional search fees were accompanied by applicant's protest.

☐ No protest accompanied the payment of additional search fees.

III. DOCUMENTS CONSIDERED TO BE RELEVANT (CONTINUED FROM THE SECOND SHEET)

Category *	Citation of Document, with indication, where appropriate, of the relevant passages	Relevant to Claim No
Y,P	US, A, 4,898,732 (FERNABDEZ) 06 FEBRUARY 1990; See column 1, line 25 et seq. and column 2, line 29 et seq.	1-3, 15-21

Con't. from Form PCT/ISA/210 (supplemental sheet) Section VI:

Inventions I and II are independent and distinct in that they differ in scope as to the required ingredients and do not form unity of invention as required by PCT Rule 13.

Invention I has the following distinct species:

1). vascular system

2). reproductive system

3). genito-urinary system

4). gastro intestinal system

5). pulmonary system

6). trachia or bronchial tree