(12) INTERNATIONAL APPLICATION PUBLISHED UNDER THE PATENT COOPERATION TREATY (PCT)

(19) World Intellectual Property Organization
International Bureau

(43) International Publication Date
24 June 2010 (24.06.2010)

PCT

(10) International Publication Number
WO 2010/070686 A1

(51) International Patent Classification:
B6SG 21/14 (2006.01) *B6SG 15/12* (2006.01)

(21) International Application Number:
PCT/IT2008/000770

(22) International Filing Date:
18 December 2008 (18.12.2008)

(25) Filing Language: Italian

(26) Publication Language: English

(71) Applicant *(for all designated States except US):* **TRE-VISAN COMETAL S.P.A. [IT/IT];** Via Meucci, 4, 1-37 135 Verona **(U).**

(72) Inventor; and
(75) Inventor/Applicant *(for US only):* **FERRERO, Vittorio [IT/IT];** Corso Galileo Ferraris, 120, 1-10129 Torino **(IT).**

(74) Agents: LONG, Giorgio et al; Jacobacci & Partners S.p.A., Via Senate, 8, 1-20121 Milano (IT).

(81) Designated States *(unless otherwise indicated, for every kind of national protection available):* AE, AG, AL, AM, AO, AT, AU, AZ, BA, BB, BG, BH, BR, BW, BY, BZ, CA, CH, CN, CO, CR, CU, CZ, DE, DK, DM, DO, DZ, EC, EE, EG, ES, FI, GB, GD, GE, GH, GM, GT, HN, HR, HU, ID, IL, IN, IS, JP, KE, KG, KM, KN, KP, KR, KZ, LA, LC, LK, LR, LS, LT, LU, LY, MA, MD, ME, MG, MK, MN, MW, MX, MY, MZ, NA, NG, NI, NO, NZ, OM, PG, PH, PL, PT, RO, RS, RU, SC, SD, SE, SG, SK, SL, SM, ST, SV, SY, **TJ,** TM, TN, TR, TT, TZ, UA, UG, US, UZ, VC, VN, ZA, ZM, ZW.

(84) Designated States *(unless otherwise indicated, for every kind of regional protection available):* ARIPO (BW, GH, GM, KE, LS, MW, MZ, NA, SD, SL, SZ, TZ, UG, ZM, ZW), Eurasian (AM, AZ, BY, KG, KZ, MD, RU, TJ, TM), European (AT, BE, BG, CH, CY, CZ, DE, DK, EE, ES, FI, FR, GB, GR, HR, HU, IE, IS, **IT,** LT, LU, LV, MC, MT, NL, NO, PL, PT, RO, SE, SI, SK, TR), OAPI (BF, BJ, CF, CG, CI, CM, GA, GN, GQ, GW, ML, MR, NE, SN, TD, TG).

Published:

— *with international search report (Art. 21(3))*

(54) Title: CONVEYOR DEVICE

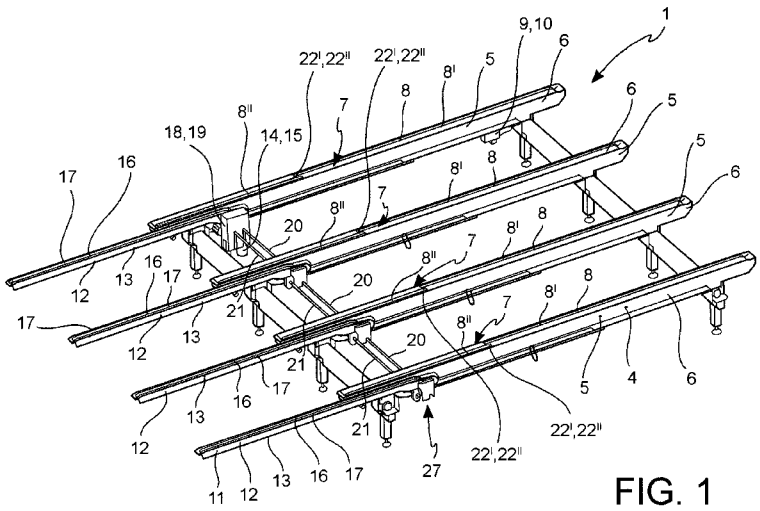

FIG. 1

(57) Abstract: A conveyor device (1) comprises a stationary frame (4) including stationary frame handling means (7) adapted to handle objects along predefined paths on such stationary frame (4); a frame (11) which is mobile between a retracted position and a protracted position relative to the stationary frame (4), wherein such mobile frame (11) includes mobile frame handling means (16) adapted to handle objects along predefined paths on the same mobile frame (11); means (9, 18, 14) for the actuation of the stationary frame handling means (7), the mobile frame handling means (16) and the relative handling of the mobile frame (11) relative to the stationary frame (4). The actuation means (9, 18, 14) are actuatable independently from one another, and the actuation means (18) of the mobile frame handling means (16) are actuatable independently from the position of the mobile frame (11) relative to the stationary frame (4).

WO 2010/070686 A1

DESCRIPTION

"CONVEYOR DEVICE"

[0001] The present invention relates to a conveyor device, in particular to a conveyor device of the industrial type.

[0002] In many types of industrial plants, for example, in mechanical or metallurgical plants, semifinished products are passed through successive stations in order to be able to be subjected to successive processing operations. With reference, for example, to aluminium processing, the semifinished product can be subjected to processing operations such as profiles extrusion, stretching, cut, ageing in ageing ovens, packaging. Upon passing between some of these stations, in particular between the cut and ageing stations, the profiles are usually put and subsequently conveyed in baskets, typically along rollers. The path that the semifinished product travels from the inlet to the plant to the final station can be long and articulated, and it can require the intervention of human operators in some zones. In such zones, the semifinished products which have been arrived thereto are manually displaced from the roller (in particular, withdrawn from the basket) to a conveyor device which brings them to a further station, for example, to the packaging or loading station of a

finishing plant (for example, painting) .

[0003] in a same processing plant, it is frequent that multiple processing cycles are performed, in which semifinished products undergo different processing operations, sometimes passing in one or more common stations. For example, it can occur that upstream the packaging station, more conveying lines are present, which converge up to there, and which the operator has to alternatively manually withdraw to workpieces form one or another line, and send them to the packaging station through a common conveyor device. The conveying lines often arrive at the foot of such conveyor device arranged mutually parallel and perpendicular to the conveyor device, which will bring them to the packaging station. Therefore, it will be appreciated that there is a conveying line nearer to the conveyor device, and that the conveying line parallel thereto is farther from the latter. Therefore, the intervention of the operator from the farther conveying line is temporally longer and less ergonomic relative to his intervention, starting from the nearest line to the conveyor device. Furthermore, in the case of operations starting from the farthest conveying line, it shall be apparent that a greater effort is required to the operator.

[0004] Therefore, the problem underlying the present

invention is to provide a conveyor device which allows reducing the overall processing times as well as the effort of the operators in plant similar to the one described above, in particular in the case of the presence of more conveying lines arranged at different distances from the same conveyor device.

[0005] This problem is solved by a conveyor device according to claim 1.

[0006] The dependant claims define possible embodiments of the invention.

[0007] In order to better understand the invention, and appreciate the advantaged thereof, same exemplary, non-limiting embodiments thereof will be described below, with reference to the annexed Figures, in which:

[0008] FIG. 1 is a perspective schematic view of a conveyor device according to the invention in a particular use condition;

[0009] FIG. 2 is a perspective schematic view of the conveyor device in FIG. 1 in a further use condition;

[0010] FIG. 3 is a perspective schematic view of the conveyor device in FIG. 1 in a further use condition;

[001I]FIG. 4 is a schematic side view of a conveyor device according to a further embodiment of the invention in a particular use condition;

[0012] FIG. 5 is a schematic side view of the conveyor

device in FIG. 4 in a further use condition;

[0013] FIG. 6 is a schematic side view of the conveyor device in FIG. 4 in a further use condition;

[0014] FIG. 7 is a schematic side view of a conveyor device according to a further embodiment of the invention in a particular use condition;

[0015] FIG. 8 is a schematic side view of the conveyor device in FIG. 7 in a further use condition;

[0016] FIG. 9 is a schematic side view of the conveyor device in FIG. 7 in a further use condition.

[0017] With reference to the Figures, a conveyor device is generally indicated with the reference number 1. The conveyor device 1 can be introduced in a plant, for example, a mechanic plant, such as a plant for processing metals. For example, the conveyor device 1 can be introduced in a plant in which semifinished products, for example, in aluminium, are conveyed along rollers and/or further transport means, preferably at least partially automated, for the processing thereof through successive processing stations. A possible application of the conveyor device 1 is to be arranged in the proximity of a plurality of conveying lines 2 for the withdrawal of the semifinished products and the conveying thereof to a packaging station. With reference, for example, to FIG. 5, on a first 2' and a

second 2" conveying lines (for example, corresponding to different processing lines) the semifinished products/ finished work pieces arrive, for example, housed in baskets 3. Then they have to be withdrawn from the baskets 3 or anyhow removed from the processing lines 2 and be arranged on the conveyor device 1. Downstream the conveyor device (that is, on the opposite side to the side in the proximity of which the conveying lines 2 arrives) a further processing station can be provided, for example, a packaging station (not shown in the Figures).

[0018] The conveyor device 1 comprises a stationary frame 4 intended to be fixedly positioned in the room in which the plant is arranged. According to a possible embodiment, the stationary frame 4 comprises one or more stationary portions 5, for example, one or more stationary elongated bars 6, arranged mutually parallel. With reference to the Figures, four parallel stationary elongated bars 6 can be, for example, provided. It shall be apparent that, as a function of the intended use of the device l, a different number of stationary elongated bars will be able to be provided. Generally, such number is above or equal to 1.

[0019] The stationary frame 4 comprises stationary frame handling means 7 adapted to handle objects, in

particular, the semifinished products or the finished products, along predefined paths on the same stationary-frame 4. In accordance with an embodiment, the stationary frame handling means 7 comprise stationary frame conveyor belts 8, that is, mobile belts having an outer surface portion with characteristics such that the belt, upon moving, can frictionally transport the semifinished products/finished products. Preferably, the stationary frame conveyor belts 8 are so oriented as to transport the semifinished products/ finished products parallel to the longitudinal development direction of the stationary elongated bars S_1 and to this aim are advantageously arranged thereon. Still more preferably, each of the stationary elongated bars 6 includes at least one of the above-mentioned stationary frame conveyor belts 8. In order to allow the handling of the stationary frame handling means 7, in particular of the stationary frame conveyor belts 8, the conveyor device 1 further comprises means 9 for the actuation of the stationary frame handling means 7. For example, the actuation means 9 of the stationary frame handling means 7 can comprise stationary frame electric actuators 10, preferably controllable at least in speed, for example, through inverters or similar control systems.

[0020] The conveyor device 1 further comprises a further

frame 11 which is mobile relative to the stationary-frame 4 between a protracted position (FIG. 1) and a retracted position (FIG. 3). Intermediate positions between the retracted position and the protracted position (in this regard, see, for example, FIG. 2) are further possible. According to a possible embodiment, such mobile frame 11 includes one or more mobile portions 12 arranged mutually parallel, each of which is capable of moving relative to a respective stationary portion 5 of the stationary frame 4. Preferably, each of the mobile portions 12 comprises a elongated bar 13 which is mobile, in particular slidable, relative to a respective elongated stationary bar 6 of the stationary frame 4. The mobile elongated bars 13 are preferably in equal number to the stationary elongated bars 6, in particular, a respective elongated bar mobile 13 is associated to each elongated stationary bar 6. Still more preferably, each of the mobile elongated bars 13 is capable of sliding parallel to the respective elongated stationary bar 6 along a longitudinal direction (intrinsic, as well as of the corresponding elongated stationary bar 6).

[0021] Preferably, the mobile elongated bars 13 and the stationary elongated bars 6 are configurated so that, when the mobile frame 11 is in the protracted position

thereof relative to the stationary frame 4, the mobile elongated bars 13 result to be at least partially projecting relative to the stationary elongated bars 6. instead, when the mobile frame 11 is in the retracted position thereof relative to the stationary frame 4, the mobile elongated bars 13 are arranged at least for most of their length (preferably completely) within the stationary elongated bars 6 longitudinal dimensions.

[0022] In order to allow the relative handling between the mobile frame 11 and the stationary frame 4, the conveyor device 1 comprises means 14 for the actuation of the relative handling thereof. For example, such means 14 for handling the mobile frame 11 relative to the stationary frame 4 include relative handling electric actuators 15 controllable at least in speed, for example, through inverters or similar electronic devices.

[0023] The mobile frame 11 comprises mobile frame handling means 16 adapted to handle objects, in particular the semifinished products or the finished products, along predefined paths on the same mobile frame 11. According to a possible embodiment, such mobile frame handling means 16 comprise mobile frame conveyor belts 17 having such characteristics as to be able to frictionally drag the semifinished products/ finished products during the

movement thereof. Preferably, the mobile frame conveyor belts 17 are so oriented as to transport the semifinished products/finished products parallel to the longitudinal development direction of the mobile elongated bars 13, and to this aim are advantageously arranged thereon. Still more preferably, each of the mobile elongated bars 13 includes such mobile frame conveyor belts 17. In order to allow the handling of the mobile frame handling means 16, in particular of the mobile frame conveyor belts 17, the conveyor device 1 further comprises means 18 for the actuation of the mobile frame handling means 16. For example, the actuation means 18 of the mobile frame handling means 16 can comprise mobile frame electric actuators 19, preferably controllable at least in speed, for example, through inverters or similar control systems. The means 18 for the actuation of the mobile frame handling means 16 are preferably associated to the mobile frame, and in particular they move therealong when this performs movements relative to the stationary frame.

[0024] Advantageously, the actuation means 9 of the stationary frame handling means 7 (in particular the stationary frame electric actuators 10), the actuation means 18 of the mobile frame handling means 16 (in particular the mobile frame electric actuators 19), and

the actuation means 14 of the relative handling of the mobile frame 11 relative to the stationary frame 4 (in particular the relative handling electric actuators 15) are actuatable independently from one another.

[0025] Still more advantageously, the actuation means 18 of the mobile frame handling means 16, in particular the mobile frame electric actuators 19, are actuatable independently from the mobile frame 11 position relative to the stationary frame 4.

[0026] Thanks to the particular configuration of the conveyor device 1, in particular thanks to the possibility of the mobile frame 11 to move relative to the stationary frame 4, it is possible to displace the same mobile frame 11 in the proximity of the conveying line 2 from which the semifinished products or the finished products have to be withdrawn. For example, if it is necessary to withdraw the semifinished products/ finished products from the farthest conveying line between two or more mutually parallel conveying lines 2, it will be sufficient to make the mobile frame Il to come out to the protracted position or, according to the cases, to a partially protracted position. Instead, when it is necessary to withdraw the semifinished products/ finished products from the nearest conveying line 2' (see, for example, FIG. 5), it will be

sufficient to bring the mobile frame 11 to the retracted position thereof or to a partially retracted position. In this manner, it is the same conveyor device 1 which brings itself to the proximity of the conveying line from which the material has to be withdrawn, therefore the operator, who has to manually withdraw the semifinished product /finished product from the basket and put it on the conveyor device 1, is not constrained to perform long paths, even when he has to operate on the farthest conveying line more.

[0027] Furthermore, the possibility of actuating the electric actuators, of stationary frame, mobile frame, and relative handling, respectively, independently from one another, and the mobile frame actuators in any position of the same mobile frame, allows optimizing the processing process, thereby considerably reducing times, and allows a higher use flexibility. In fact, besides the above -cited advantage related to the manual operations by the operator, it is possible, for example, to adjust the mobile frame and stationary frame conveyor belts to different speeds, so as to create buffers.

[0028] Furthermore, optionally, but not necessarily, it is possible to simultaneously handle the mobile frame conveyor belts to the same mobile frame, so that the overall speed of the objects conveyed thereon is equal

to the vector sum of the mobile frame conveyor belts and the mobile frame speed relative to the stationary frame.

[0029] Furthermore, it is possible to provide a plurality of positions for the mobile frame. For example, it is possible to provide several positions corresponding to more transport lines. Alternatively or in addition, it is possible to provide, for example, an intermediate unloading position (FIG. 8), in which it is possible to unload work pieces with particular characteristics (for example, faulty pieces) on an auxiliary conveying line 2'''.

[0030] In order to avoid interferences on the same profiles by the mobile frame handling means 16 and the stationary frame handling means 7, the latter, in particular the stationary frame conveyor belts 8 and the mobile frame conveyor belts 17, respectively, are arranged at different heights. For example, the mobile frame handling means 16 are at a lower height relative to the stationary frame handling means 7. To this aim, it is possible to provide, for example, the mobile elongated bars 13 at slightly lower heights relative to the stationary elongated bars 6.

[0031] In accordance with a possible embodiment, the actuation means 14 of the relative handling of the mobile frame 11 relative to the stationary frame 4 are

so configured as to be able to contemporaneously make each of the mobile portions 12 performs essentially the same movements, in particular each of the mobile elongated bars 13, of the mobile frame 11, relative to each of the stationary portions 5, in particular the stationary elongated bars 6, of the stationary frame 4. For example, it is possible to provide a single relative handling electric actuator 15 capable of contemporaneously actuate each of the mobile elongated bars 13. Such single relative handling electric actuator 15 can be, for example, associated to only one of such mobile elongated bars 13 (for example, an elongated bar mobile arranged at a mobile frame side end) and be connected to the remaining ones through one or more relative handling drive shafts 20. On such relative handling drive shaft or shafts special motion driving means 27 can be provided. For example, suitable gears can be provided which are adapted to mesh with corresponding racks associated to the stationary elongated bars. The preferably synchronic movement of the relative handling drive shafts 20 makes also so that the mobile bars 13 perform essentially the same movements relative to the respective stationary elongated bars 6.

[0032] Alternatively, according to an embodiment not shown

in the Figures, the relative handling actuation means 14 of the mobile frame 11 relative to the stationary frame 4 can be so configured as to be able to handle each of the mobile portions 12 relative to each of the stationary portions 5 in an independent manner. For example, it is possible to implement the above-described synchronous movement via a plurality of relative handling electric actuators 15, each associated to one of the mobile elongated bars 13 and controlled in an independent manner from the other ones, for example, through electronic controllers. According to such configuration, it is also possible, if needed, to perform an asynchronous movement of the mobile elongated bars 13 relative to the respective stationary elongated bars 11.

[0033] Similar configurations can be provided also for the actuation means 9 of the stationary frame handling means 7 and/or for the actuation means 18 of the mobile frame handling means 16.

[0034] In particular, it is possible to provide a single mobile frame electric actuator 19 capable of contemporaneously actuating each of the mobile frame conveyor belts 17. Such single mobile frame electric actuator can be associated, for example, to one of such mobile elongated bars 13, and be connected to the

remaining ones through one or more mobile frame drive shafts 21. To such mobile frame drive shaft or shafts 21, for example, pulleys on which the belts are wrapped can be associated, directly or via driving elements. The synchronous movement of the mobile frame drive shafts 21 makes so that the mobile frame conveyor belts on the respective mobile bars perform essentially the same movements .

[0035] Alternatively, according to a possible embodiment not shown in the Figures, the actuation means 18 of the mobile frame handling means 16 can be so configured as to be able to handle each of the mobile frame conveyor belts 17 in an independent manner from one another. For example, it is possible to implement the above -described synchronous movement via a plurality of mobile frame electric actuators 19, each associated to a mobile frame conveyor belt of each of the mobile elongated bars, and controlled in an independent manner from the other ones, for example, via electronic controllers. According to such control mode, it is also possible, if needed, to carry out an asynchronous movement of the mobile frame conveyor belts.

[0036] Similarly, it is possible to provide a single stationary frame electric actuator 10 capable of contemporaneously actuating each of the stationary frame

conveyor belts 8. Such single stationary frame electric actuator 10 can be associated, for example, to one of such stationary frame conveyor belts, and be connected to the remaining ones through one or more stationary frame drive shafts (not shown in the Figures). To such stationary frame drive shaft or shafts, for example, pulleys on which the belts are wrapped can be associated. The preferably synchronous movement of the stationary frame drive shafts makes so that the belts on the respective stationary bars perform essentially the same movements.

[0037] Alternatively, according to an embodiment not shown in the Figures, the actuation means 9 of the stationary frame handling means 7 can be so configured as to be able to handle each of the stationary frame conveyor belts 8 in an independent manner from one another. For example, it is possible to implement the above-mentioned synchronous movement via a plurality of stationary frame electric actuators 10, each associated to a stationary frame conveyor belt of each of the stationary elongated bars, and controlled in an independent manner from the other ones, for example via electronic controllers. According to such control mode, it is also possible, if needed, to carry out an asynchronous movement of the stationary frame conveyor belts.

[0038] In accordance with a possible embodiment, the stationary frame conveyor belts 8 comprise at least one primary conveyor belt 8' and a secondary conveyor belt 8'' actuatable in an independent manner, for example, through a stationary frame primary electric actuator 10' and a stationary frame secondary electric actuator 10'', respectively. The primary and secondary stationary frame electric actuators are preferably associated to the stationary frame. For them, the same considerations given with reference to the single stationary frame electric actuator 10 described before apply.

[0039] Advantageously, the stationary frame primary 10' and secondary 10'' conveyor belts are operatively arranged in series. With further advantage, they comprise respective exchange terminal portions 22' and 22'' arranged in parallel. According to such configuration, the stationary frame primary 10' and secondary 10'' conveyor belts are arranged slightly mutually offset but essentially parallel, so that the semifinished or finished product can be automatically passed from one to the other one as occurs in an operative arrangement in series. However, at the respective exchange terminal portions 22' and 22', the primary belt 8' and the secondary belt 8'' result to be operatively in parallel. in other words, at such

exchange terminal portions 22' and 22', the semifinished product or finished object can be processed by both belts. In this manner, when the semifinished product/finished product reaches the stationary frame primary conveyor belt 8' final end, it is contemporaneously at the stationary frame secondary conveyor belt 8'' initial end. Advantageously, at the respective exchange terminal portions 22' and 22', the primary and secondary stationary frame conveyor belts 8' and 8'' are wrapped on mutually coaxial primary and secondary pulleys, respectively, which are preferably arranged in a seat obtained in the stationary frame 4. In other words, the primary and secondary pulleys result to be integrated in the stationary portions 5. In this way, the stationary frame 4 overall dimensions are reduced .

[0040] According to a particularly advantageous embodiment, first sensor means (not shown in the Figures) can be provided on the stationary frame 4, which are adapted to determine the presence or absence of the semifinished product /finished product on the stationary frame primary conveyor belts 8' in the proximity of the exchange terminal portions 22' thereof. This makes possible the coordination of the movements between the stationary frame primary conveyor belt 8'

and the stationary frame secondary conveyor belt 8'', for example, by advancing the stationary frame secondary conveyor belt 8'' (on which are optionally already stacked further semifinished products/finished products) only after the first sensor means have signalled the presence of a further semifinished product /finished product at the primary terminal portion 22' of the stationary frame primary conveyor belt 8'. In this manner, impacts are avoided between semifinished products/finished products on the two stationary frame primary and secondary conveyor belts, and it is possible to implement a buffering function, for example, by differently adjusting the speed of the stationary frame primary and secondary conveyor belts.

[0041] With further advantage, the stationary frame 4 comprises second sensor means (not shown in the Figures) so configured as to be capable of verifying the orientation of one of the semifinished products/finished products on the stationary frame primary 8' and secondary 8'' conveyor belts at the respective exchange terminal portions 22' and 22'' thereof. Such second sensor means are preferably arranged downstream the first sensor means (with reference to a direction running from the stationary frame primary conveyor belt 8' to the stationary frame secondary conveyor belt 8'') .

For example, it is possible to provide the second sensor means on the stationary elongated bars 6 arranged at the stationary frame side ends. In this manner, it is possible to determine whether the semifinished product /finished product is in the proper position. In fact, the proper position is given only if both the second end sensor means signal the presence of the semifinished product /finished product. In order to obtain, if absent, the proper positioning of the semifinished product /finished product, different control strategies for the belts are possible. For example, it is possible to handle the stationary frame primary conveyor belts 8' and the stationary frame secondary conveyor belts 8'' with different speed (if as many independent stationary frame electric actuators are provided) until the proper orientation of the work piece is reached. Alternatively, it is possible to handle in a synchronic manner the stationary frame primary conveyor belts 8' while keeping the stationary frame secondary conveyor belts *B''* steady, until when all the second sensor means have confirmed the semifinished product/finished product proper orientation.

[0042] In order to implement an at least partial automation of the actuation means of the stationary frame handling means, the actuation means of the mobile

frame handling means, and the actuation means of the relative handling of the mobile frame relative to the stationary frame, the conveyor device 1 advantageously comprises a control unit (not shown in the Figures) . Via such control unit it is possible to set the operational mode of the device and the operative parameters thereof (for example, conveyor belts speed, relative speed of the mobile frame relative to the stationary frame) .

[0043] It shall be noted that for the mobile frame conveyor belts 17, in addition to the automatic handling mode, a manual handling mode is preferably provided, that is, actuatable directly by an operator, for example, via a control pedal (not shown in the Figures) . This is because, according to some possible use modes of the device, the semifinished products/ finished products are loaded on the mobile frame conveyor belts by the operator, who therefore needs to have the control of the belt advancement once he has put the semifinished products/finished products thereon.

[0044] In accordance with an embodiment, the conveyor device 1 according to the invention comprises an auxiliary frame 23 (Figures 4-6 and 7-9) . Such auxiliary frame 23 can be associated to the device 1, for example, in the case where several conveying lines 2 are present . The auxiliary frame 23 comprises auxiliary frame

handling means 24 adapted to handle the semifinished products/finished products along predefined paths on the same auxiliary frame 23. Such auxiliary frame handling means 24 preferably comprise auxiliary frame conveyor belts 25 and means 28 for the actuation thereof (for example, auxiliary frame electric actuators 29). The auxiliary frame 23 is arranged so that, when the mobile frame 11 is in the protracted position, the auxiliary frame handling means 24, in particular the auxiliary frame conveyor belts 25, and the mobile frame handling means 16, in particular the mobile frame conveyor belts 17, are operatively arranged in series (see Figures 4 and 7).

[0045] In accordance with a possible embodiment, the auxiliary frame 23 has a fixed conformation, that is, it cannot be essentially varied in configuration during the use of the device (Figures 7-9).

[0046] In accordance with a further embodiment, the auxiliary frame 23 comprises instead a mobile portion 26 such as to discontinue the connection in series between the auxiliary frame and the mobile frame, whichever the position of the mobile frame relative to the fixed frame is (Figures 4-6). For example, the mobile portion 26 of the auxiliary frame 23 can be so conformed as to be able to move between a lowered portion (FIG. 4) and a lifted

position (Figures 5 and 6). When the mobile portion 23 is in the lowered position, the connection in series between the auxiliary frame and the mobile frame (provided that the mobile frame is in the protracted position thereof) is possible, while when the mobile portion 23 is in the lifted position, such connection in series is not possible in any event. The mobile portion 26 lifting can result to be needed, for example, in the case where some space has to be left for the direct loading of semifinished products/finished products directly on the mobile frame, or due to the passage of baskets 3 in conveying lines arranged between the stationary frame and the auxiliary frame.

[0047] Preferably, the above-described control unit is adapted to control in an automatic and/or at least partially automatic manner also the means 28 for the actuation of the auxiliary frame handling means 24, in particular the auxiliary frame conveyor belts 25. Preferably, the auxiliary frame conveyor belts 25 can further be manually actuated, for example, via a control pedal (not shown in the Figures), in order to allow to the operator loading the semifinished products/ finished products and handling them as they are being loaded.

[0048] From the description given, those skilled in the art will be able to appreciate how the conveyor device

according to the invention allows the withdrawal of semifinished products or finished products from a plurality of conveying lines arranged at different distances from the same device without for this causing delays in the processing times. In fact, thanks to the possibility of the mobile frame to move relative to the fixed frame, the device is capable to tailoring the conformation of the plant in which it is introduced. Furthermore, thanks to the above-mentioned mobility of the mobile frame, the operator is not constrained to travel long paths in order to transport the semifinished products/finished products.

[0049] Furthermore, the possibility of the conveyor belts to move in an independent manner from one another, also during the mobile frame movements, independently from the position of the latter, makes so that the dead times in the processing cycle are reduced.

[0050LFurthermore , the above-mentioned characteristics make the conveyor device extremely versatile and adaptable to the plant type to which it is associated. For example, it is possible to provide more intermediate mobile frame stop portions, for example, in the case of a multiplicity of transport lines, or for the extemporaneous unloading of scrap pieces to be put on a special line, or only in order to open a passage gap for

the operator, who therefore is not forced to run the entire path around the device, but can safely pass therethrough (Figures 6 and 8).

[0051] It shall be apparent that variations and/or additions to what has been described and illustrated above can be provided.

[0052] For example, it is possible to provide the mobile frame mobility relative to the stationary frame on both sides of the latter. In this manner, the advantages which are obtained at the loading side can be also obtained at the unloading side.

[0053] Furthermore, it is possible to provide a plurality of mobile frames relative to the stationary frame, for example, mutually connected in series. In this manner it is possible to obtain a combination of movements such as to make the device 1 useful also in plants with several transport lines.

[0054] Furthermore, it is possible to provide two or more conveyor belts operatively arranged in series with exchange terminal portions arranged in parallel configured in a similar manner to those described with reference to the stationary frame also in the auxiliary frame and/or in the mobile frame. The handling thereof can be implemented according to modes similar to those described with reference to the stationary frame primary

conveyor and secondary belts. Special sensor means for the determination of the presence /absence and/or the orientation of the semifinished products/ finished products at the exchange terminal portions can be associated thereto.

[0055] Furthermore, further sensor means adapted to determine the semifinished products/finished products weight can be associated to the conveyor belts of any frames (stationary and/or mobile and/or auxiliary) . Such further weight sensor means can be, for example, associated to some of the pulleys on which the conveyor belts are wrapped.

[0056] Furthermore, in the case where more conveyor belts in series with exchange terminal portions in parallel also on the mobile frame are provided, it is possible to provide that such belts are arranged on respective portions of mobile frame elongated bar which are rotatable the ones relative to the other ones. For example, in the case of two conveyor belts in series, it is possible to provide two distinct elongated bar portions, in which a first portion supports the primary conveyor belt, and a second portion supports the secondary conveyor belt. The second portion can rotate relative to the first one, for example, around an axis' coincident with the common rotational axis of the

primary conveyor belt and the secondary conveyor belt. A movement of the second portion relative to the first one can serve, for example, to create an evacuation passage for scrap semifinished products, or to create a ramp/chute in order to bring the semifinished products/ finished products to a different height, for example, on a further belt or a transport line.

[0057] To the embodiments described above of the conveyor device according to the invention, those skilled in the art, to the aim of meeting specific, contingent needs will be able to make a number of additions, modifications, or replacements of elements with functionally equivalent other ones, without anyhow departing from the scope of the annexed claims.

[0058] Each of the characteristics described as belonging to an embodiment can be implemented independently from the other embodiments described.

CLAIMS

1. A conveyor device (1) comprising:

- a stationary frame (4) including stationary frame handling means (7) adapted to handle objects along predefined paths on said stationary frame (4);

- a frame (11) which is mobile between a retracted position and a protracted position relative to said stationary frame (4), said mobile frame (11) including mobile frame handling means (16) adapted to handle objects along predefined paths on said mobile frame (11);

- means (9) for the actuation of said stationary frame handling means (7);

- means (18) for the actuation of said mobile frame handling means (16);

- means (14) for the actuation of the relative handling of said mobile frame (11) relative to said stationary frame (4);

in which said actuation means (9, 18, 14) of the stationary frame handling means (7), of the mobile frame handling means (16), and of the relative handling of the mobile frame (11) relative to the stationary frame (4), respectively, are actuatable independently from one another, and in which said actuation means (18) of the mobile frame handling means (16) are actuatable

independently from the mobile frame (11) position relative to the stationary frame (4).

2. The conveyor device (1) according to claim 1, wherein said mobile frame handling means (16) and said stationary frame handling means (7) are arranged at different heights.

3. The conveyor device (1) according to claim 1 or 2, wherein said stationary frame (4) comprises one or more stationary portions (5) arranged parallel, and said mobile frame (11) comprises one or more mobile portions (12) arranged parallel, each of said mobile portions (12) being capable to move relative to a respective stationary portion of said stationary portions (5).

4. The conveyor device (1) according to the preceding claim, wherein each of said mobile portions (12) comprises a mobile elongated bar (13), and each of said stationary portions (5) comprises an elongated stationary bar (6), said mobile elongated bars (12) being slidable relative to said stationary elongated bars (6) parallel thereto in the longitudinal direction.

5. The conveyor device (1) according to the preceding claim, wherein at said protracted position of the mobile frame (11), said mobile elongated bars (12) are at least partially projecting relative to said stationary elongated bars (6), and at said retracted position of

the mobile frame (11), said mobile elongated bars (12) are arranged at least for most of theirs length within the longitudinal dimensions of said stationary elongated bars (6).

6. The conveyor device (1) according to any one of the claims 3 to 5, wherein said actuation means (14) of the relative handling of the mobile frame (11) relative to the stationary frame (4) are so configured as to be able to make so that each of said mobile portions (12) performs essentially contemporaneously the same movements relative to the corresponding stationary portions (5), and/or said actuation means (9) of the stationary frame handling means (7) are so configured as to be able to make so that the stationary frame handling means (7) perform essentially the same movements, and/or said actuation means (18) of the mobile frame handling means (16) are so configured as to be able to make so that the mobile frame handling means (16) perform essentially the same movements.

7. The conveyor device (1) according to any one of the claims 3 to 5, wherein said actuation means (14) of the relative handling of the mobile frame (11) relative to the stationary frame (7) are so configured as to be able to handle each of said mobile portions (12) relative to the corresponding stationary portions (5) in an

independent manner the ones from the other ones, and/or said actuation means (9) of the stationary frame handling means (7) are so configured as to be able to make so that the stationary frame handling means (7) perform more contemporaneous mutually independent movements, and/or said actuation means (18) of the mobile frame handling means (16) are so configured as to be able to make so that the mobile frame handling means (16) perform more contemporaneous mutually independent.

8. The conveyor device (1) according to any one of the claims 4 to 7, wherein said stationary frame handling means (7) comprise stationary frame conveyor belts (8; 8', 8''), and said mobile frame handling means (16) comprise mobile frame conveyor belts (17), said stationary frame (8; 8', 8'') and mobile frame (17) conveyor belts being capable of being moved in a mutually independent manner, and independently from the movements of said mobile elongated bars (13) relative to said stationary elongated bars (6).

9. The conveyor device (1) according to the preceding claim, wherein said stationary frame conveyor belts (8; 8', 8'') comprise at least one stationary frame primary conveyor belt (8') and a stationary frame secondary conveyor belt (8'') actuatable in an independent manner.

10. The conveyor device (1) according to the preceding

claim, wherein said stationary frame primary (8') and secondary (8'') conveyor belts are operatively arranged in series, and comprise respective exchange terminal portions (22, 22', 22'') arranged in parallel.

11. The conveyor device (1) according to the preceding claim, wherein said stationary frame (4) comprises first sensor means adapted to determine the presence or absence of one of said objects on the stationary frame primary conveyor belts (8') in the proximity of said exchange terminal portions (22') thereof.

12. The conveyor device (1) according to claim 10 or 11, wherein said stationary frame (4) comprises second sensor means so configured as to determine the orientation of one of said objects on the stationary frame primary (8') and/or secondary (8'') conveyor belts at said exchange terminal portions (22', 22'') thereof.

13." The conveyor device (1) according to any one of the claims 10 to 12, wherein at said exchange terminal portions (22, 22', 22'') said stationary frame primary (8') and secondary (8'') conveyor belts are partially wrapped on primary and secondary pulleys, respectively, said primary and secondary pulleys being mutually coaxial .

14. The conveyor device (1) according to the preceding claim, wherein said primary and secondary pulleys are

provided in said stationary portions (5) and are integrated therein.

15. The conveyor device (1) according to any one of the preceding claims, wherein said means (18, 9, 14) for the actuation of the mobile frame handling means (16) and/or of the stationary frame handling means (7), and/or of the relative handling of the mobile frame (11) relative to said stationary frame (4) comprise electric actuators respectively of mobile frame (19), stationary frame (10), and relative handling (15), respectively, controllable at least in speed.

16. The conveyor device (1) according to the preceding claim, wherein said actuation means (9) of the stationary frame handling means (7) comprise two of said stationary frame electric actuators (10) associated to said stationary portions (5) in order to actuate said stationary frame primary (8') and secondary (8'') conveyor belts, and said actuation means (18) of the mobile frame handling means (16) comprise only one of said mobile frame electric actuators (19) associated to said mobile portions (12).

17. The conveyor device (1) according to any one of the preceding claims, comprising a control unit adapted to control in an automatic and/or at least partially automatic manner said means (18, 9, 14) for the

actuation of the stationary frame handling means (7), of the mobile frame handling means (16), and of the relative handling of said mobile frame relative to said stationary frame.

18. The conveyor device (1) according to any one of the preceding claims, comprising an auxiliary frame (23) including auxiliary frame handling means (24) adapted to handle objects along predefined paths on said auxiliary frame (23), and means (28) for the actuation of said auxiliary frame handling means (24), wherein when said mobile frame (11) is in the protracted position, said auxiliary frame handling means (24) and said mobile frame handling means (16) are operatively arranged in series so that said objects can be subsequently handled along said predefined paths on said auxiliary frame (23) and on said mobile frame (11).

19. The conveyor device (1) according to claim 18, wherein said auxiliary frame (23) has a fixed configuration.

20. The conveyor device (1) according to claim 18, wherein said auxiliary frame (23) comprises a mobile portion (26) such as to discontinue the connection in series between said auxiliary frame (23) and said mobile frame (11), whichever the position of said mobile frame (11) relative to said stationary frame (4) is.

21. The conveyor device (1) according to any one of the claims 18 to 20, wherein said auxiliary frame handling means (24) comprise auxiliary frame conveyor belts (25), and said actuation means (28) of the auxiliary frame handling means (24) include auxiliary frame electric actuators (29) controllable at least in speed.

22. The conveyor device (1) according to any one of the claims 18 to 21, wherein said control unit is further adapted to control in an automatic and/or at least partially automatic manner said means (28) for the actuation of the auxiliary frame handling means (24).

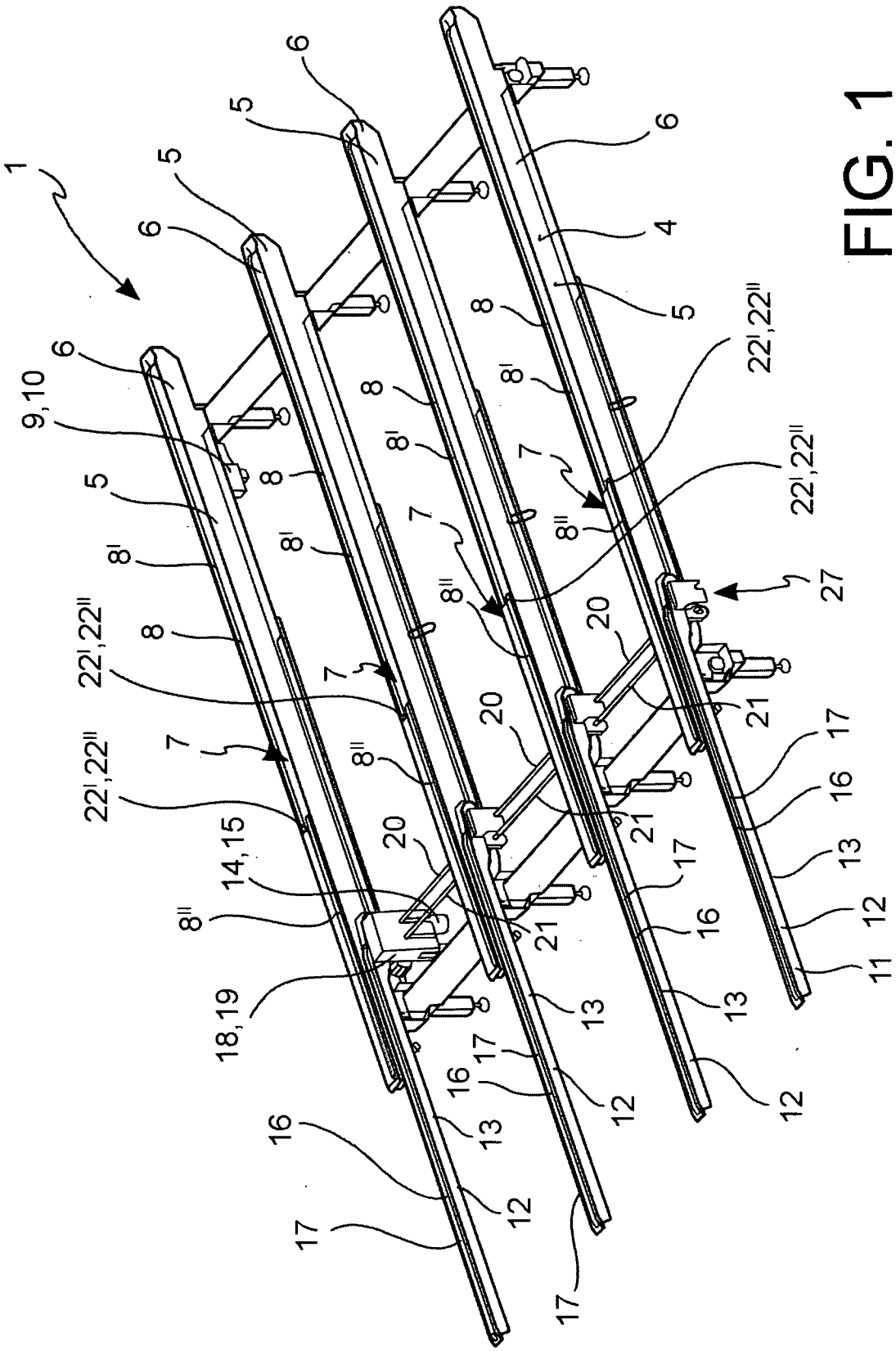

FIG. 1

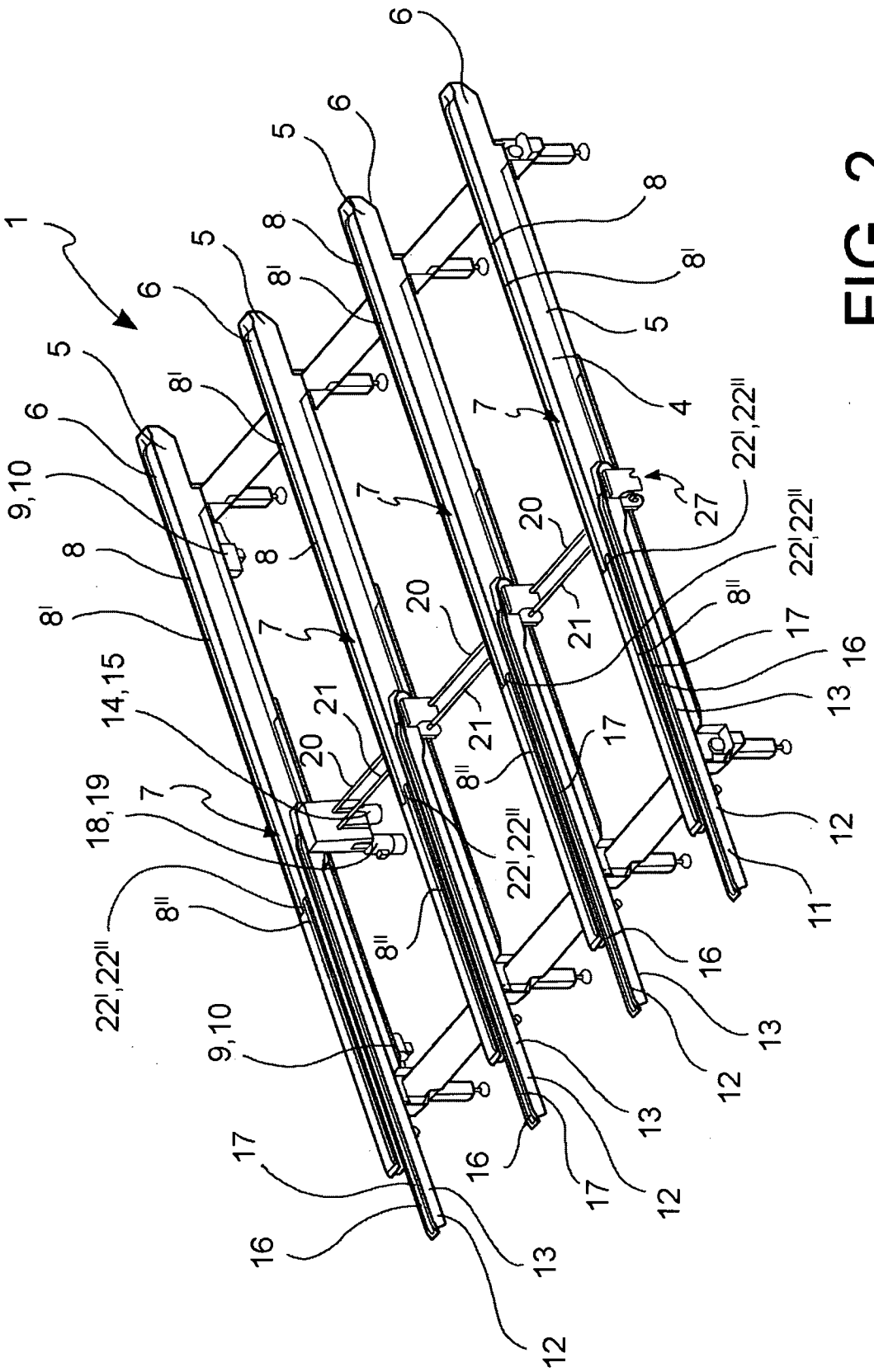

FIG. 2

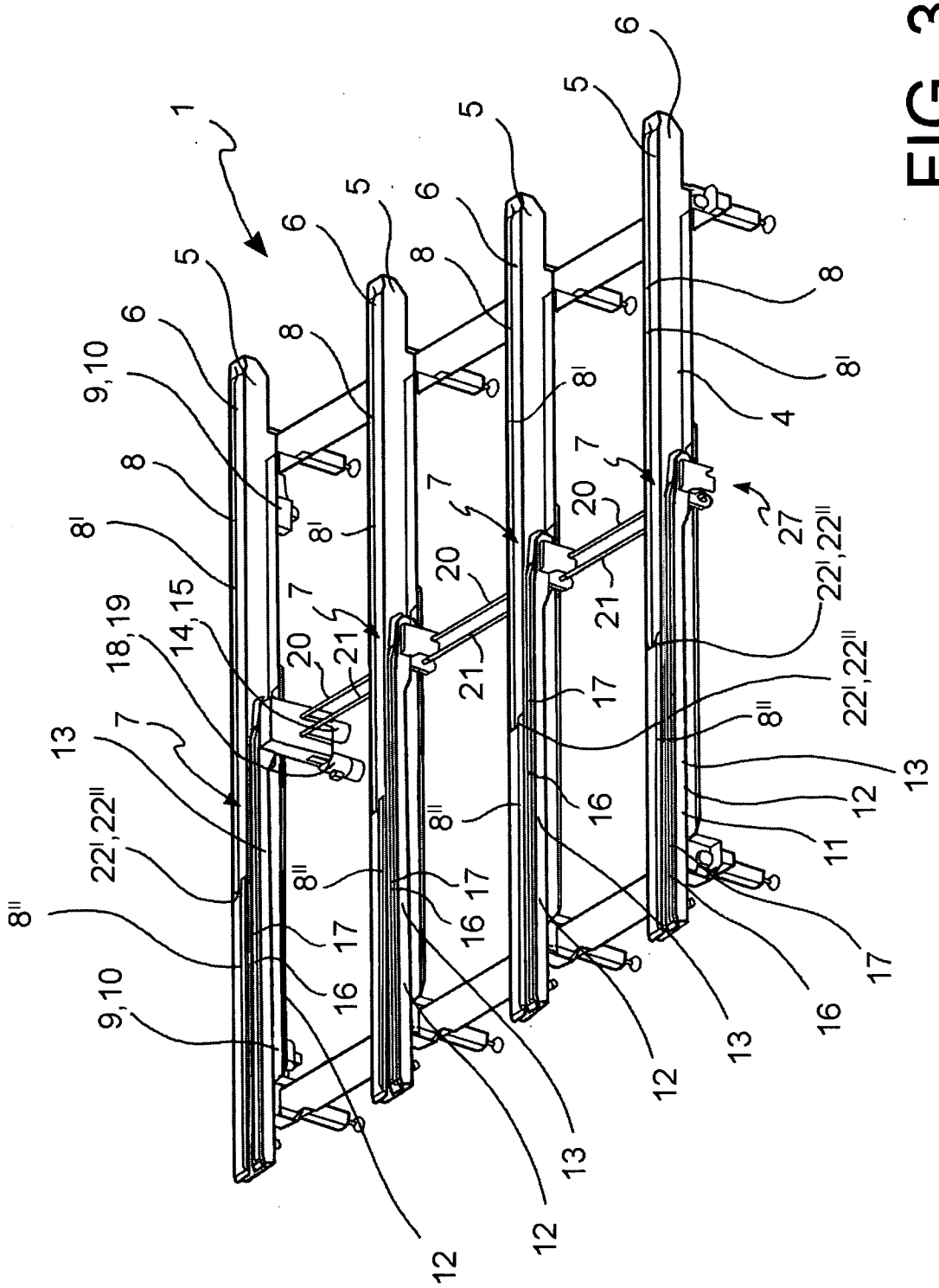

FIG. 3

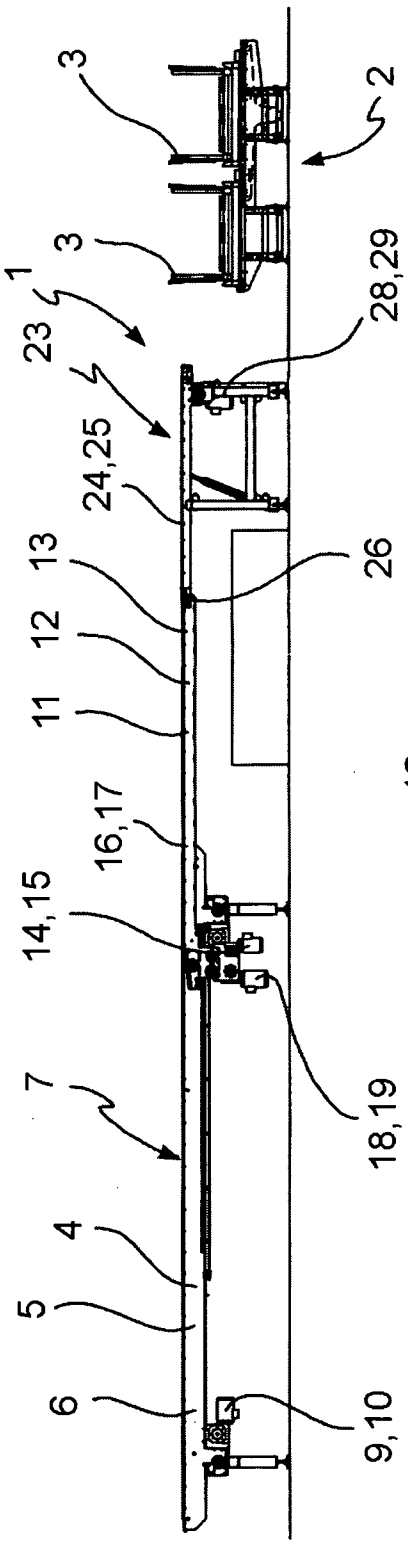

FIG. 4

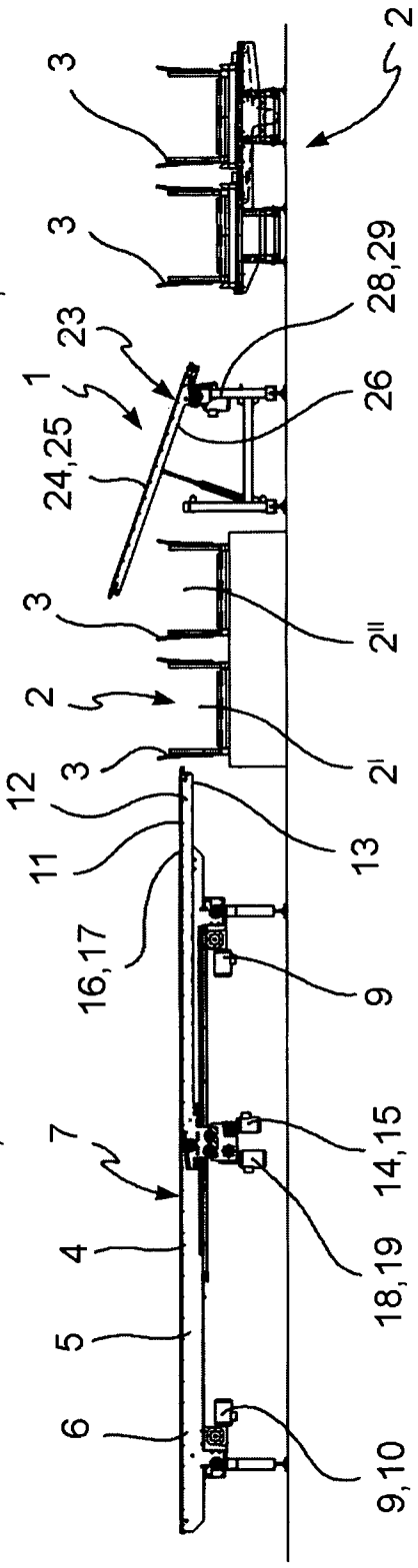

FIG. 5

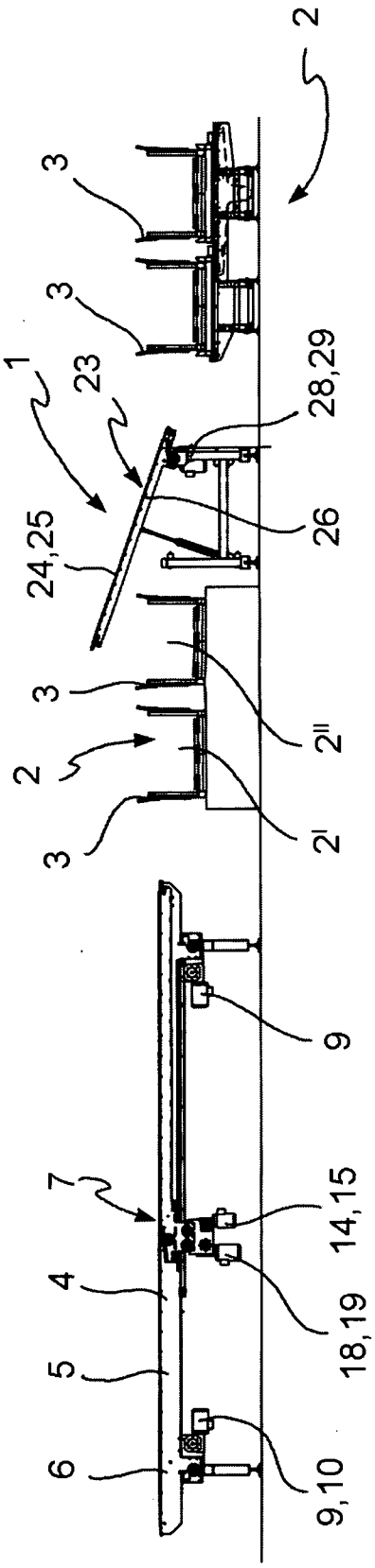

FIG. 6

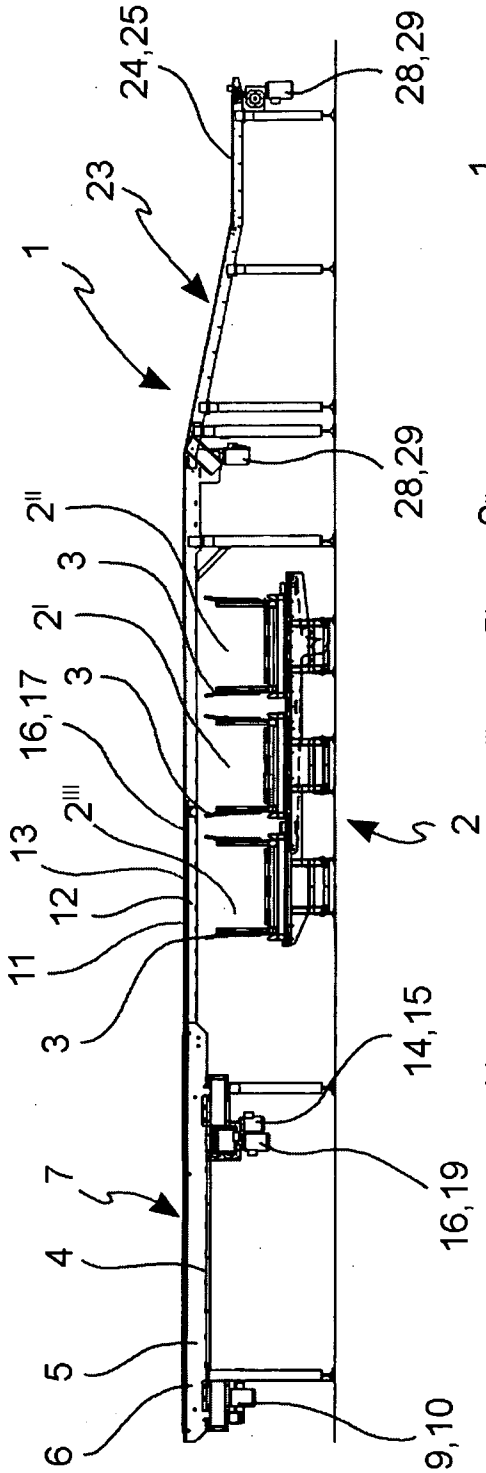

FIG. 7

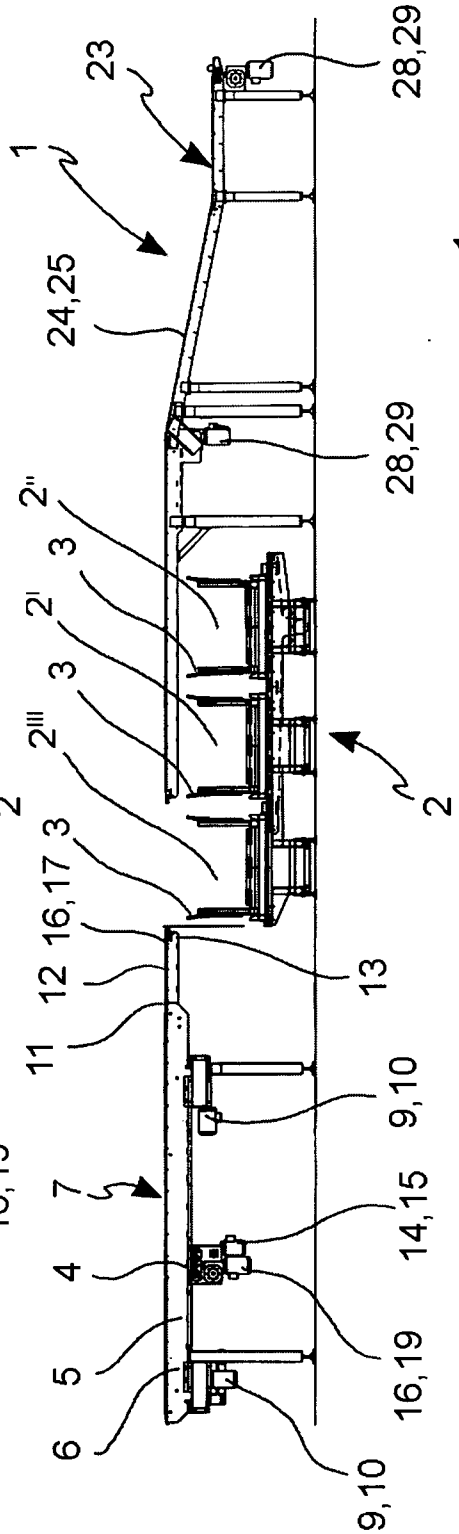

FIG. 8

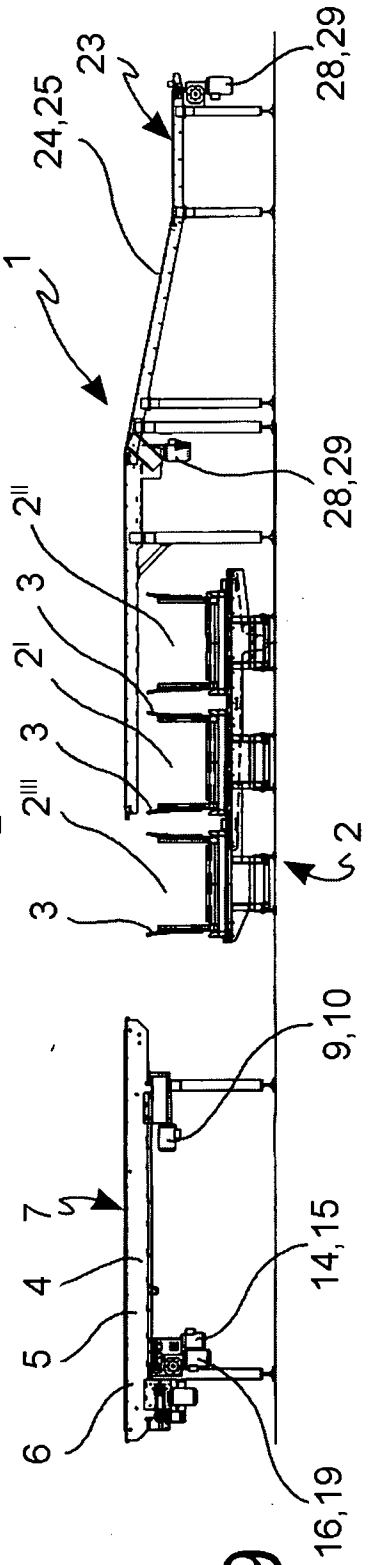

FIG. 9

INTERNATIONAL SEARCH REPORT

International application No
PCT/IT2008/000770

A. CLASSIFICATION OF SUBJECT MATTER
INV. B65G21/14 B65G15/12

According to International Patent Classification (IPC) orto both national classification and IPC

B. FIELDS SEAFtCHED

Minimum documentation searched (classification system followed by classification symbols)
B65G

Documentation searched other than minimum documentation to the extent that such documents are included in the fields searched

Electronic data base consulted during the international search (name of data base and, where practical, search terms used)

EPO-Internal

C. DOCUMENTS CONSIDERED TO **BE RELEVANT**

Category*	Citation of document, with indication, where appropriate, of the relevant passages	Relevant to claim No.
X	WO 97/27131 A (ROLLGARD WILLY [SE]) 31 July 1997 (1997-07-31) page 8, paragraph 3 figures 2,4	1-6, 8-19,21, 22
X	US 6 397 999 Bl (TAYLOR LAURENCE EDWARD [US]) 4 June 2002 (2002-06-04) column 1, lines 23-25 column 2, lines 16-19 column 5, lines 9-13 figures 1,7,8	1-3,18, 19
X	DE 34 46 735 Al (BABCOCK BSH AG [DE]) 26 June 1986 (1986-06-26) page 8, paragraph 3 - page 9, paragraph 1; figures 3,4	1,18,19

-/--

[X] Further documents are listed in the continuation of Box C.

[X] See patent family annex.

* Special categories of cited documents :

"A" document defining the general state of the art which is not considered to be of particular relevance

"E" earlier document but published on or after the international filing date

"L" document which may throw doubts on priority claim(s) or which is cited to establish the publication date of another citation or other special reason (as specified)

"O" document referring to an oral disclosure, use, exhibition or other means

"P" document published prior to the international filing date but later than the priority date claimed

[1]T" later document published after the international filing date or priority date and not in conflict with the application but cited to understand the principle or theory underlying the invention

"X[1] document of particular relevance; the claimed invention cannot be considered novel or cannot be considered to involve an inventive step when the document is taken alone

"Y[1] document of particular relevance; the claimed invention cannot be considered to involve an inventive step when the document is combined with one or more other such docu¬ments, such combination being obvious to a person skilled in the art.

"&" document member of the same patent family

Date of the actual completion of the international search	Date of mailing of the international search report
26 May 2009	04/06/2009

Name and mailing address of the ISA/	Authorized officer
European Patent Office, P.B. 5818 Patentlaan 2 NL- 2280 HV Rijswijk Tel. (+31-70) 3*0-2040, Fax: (+31-70) 340-3016	Schneider, Emmanuel

INTERNATIONAL SEARCH REPORT

International application No
PCT/IT2008/000770

C(Continuation). DOCUMENTS CONSIDERED TO BE RELEVANT

Category*	Citation of document, with indication, where appropriate, of the relevant passages	Relevant to claim No.
X	EP 0 638 502 A (BIELOMATIK LEUZE & CO [DE]) 15 February 1995 (1995-02-15) column 2, lines 37-40; figures 3,4	1,18,19
X	FR 2 911 332 A (ADVANCED AUTOMATION SOC RESPON [FR]) 18 July 2008 (2008-07-18) abstract; figures 1,2	1
X	US 2004/168886 Al (QUADRACCI DAVID T [US] ET AL) 2 September 2004 (2004-09-02) paragraphs [0040], [0041]; figures 4,6	1
A	EP 0 057 386 A (NANTAISE BISCUITERIE [FR]) 11 August 1982 (1982-08-11) figures 1,2	1,2
A	US 5 351 809 A (GILMORE PHILLIP J [US] ET AL) 4 October 1994 (1994-10-04) figures 2a, 3	1
A	US 3 464 537 A (THULL JOHN F) 2 September 1969 (1969-09-02) column 2, line 44; figures	1,17-19
A	EP 1 826 154 A (GAWRONSKI GMBH INDUSTRIEVERTRE [DE]) 29 August 2007 (2007-08-29) figure Id	1-3
A	EP 0 798 240 A (XEDA INTERNATIONAL [FR]) 1 October 1997 (1997-10-01) figure 1	2

INTERNATIONAL SEARCH REPORT

Information on patent family members

International application No
PCT/IT2008/000770

Patent document cited in search report		Publication date	Patent family member(s)			Publication date
WO 9727131	A	31-07-1997	AU	1561997	A	20-08-1997
			EP	0966393	AI	29-12-1999
			SE	510421	C2	25-05-1999
			SE	9600234	A	24-07-1997
US 6397999	Bl	04-06-2002	NONE			
DE 3446735	AI	26-06-1986	CH	670809	A5	14-07-1989
EP 0638502	A	15-02-1995	AT	185769	T	15-11-1999
			CA	2129931	AI	13-02-1995
			DE	4327049	AI	16-02-1995
			ES	2140484	T3	01-03-2000
			FI	943715	A	13-02-1995
			US	5555968	A	17-09-1996
FR 2911332	A	18-07-2008	NONE			
US 2004168886	AI	02-09-2004	NONE			
EP 0057386	A	11-08-1982	CA	1188714	AI	11-06-1985
			DE	3266721	DI	14-11-1985
			ES	8301818	AI	01-04-1983
			FR	2499033	AI	06-08-1982
			US	4469219	A	04-09-1984
US 5351809	A	04-10-1994	CA	2120671	AI	27-10-1994
US 3464537	A	02-09-1969	CH	489420	A	30-04-1970
			DE	1761726	BI	08-04-1971
			GB	1220158	A	20-01-1971
			NL	6814821	A	21-04-1969
EP 1826154	A	29-08-2007	DE	102006008583	B3	09-08-2007
EP 0798240	A	01-10-1997	FR	2755679	AI	15-05-1998