(12) INTERNATIONAL APPLICATION PUBLISHED UNDER THE PATENT COOPERATION TREATY (PCT)

(19) World Intellectual Property Organization
International Bureau

(43) International Publication Date
18 August 2011 (18.08.2011)

PCT

(10) International Publication Number
WO 2011/098428 A1

(51) International Patent Classification:
C23C 18/16 (2006.01) *C25D 5/20* (2006.01)
C23C 18/20 (2006.01) *C25D 5/56* (2006.01)
C23C 18/30 (2006.01) *H05K 3/18* (2006.01)
C25D 5/02 (2006.01)

(21) International Application Number:
PCT/EP2011/051757

(22) International Filing Date:
7 February 2011 (07.02.2011)

(25) Filing Language: English

(26) Publication Language: English

(30) Priority Data:
10001464.6 12 February 2010 (12.02.2010) EP

(71) Applicant *(for all designated States except US)*: **ATOTECH DEUTSCHLAND GMBH** [DE/DE]; Erasmusstrasse 20, 10553 Berlin (DE).

(72) Inventors; and

(75) Inventors/Applicants *(for US only)*: **EWALD, Heinz** [DE/DE]; Hunsrueckstrasse 39, 41352 Korschenbroich (DE). **PEREIRA, Arnaldo** [BR/DE]; Hortensienstrasse 17 B, 12203 Berlin (DE).

(74) Agent: **BRESSEL, Burkhard**; Potsdamer Platz 10, 10785 Berlin (DE).

(81) Designated States *(unless otherwise indicated, for every kind of national protection available)*: AE, AG, AL, AM, AO, AT, AU, AZ, BA, BB, BG, BH, BR, BW, BY, BZ, CA, CH, CL, CN, CO, CR, CU, CZ, DE, DK, DM, DO, DZ, EC, EE, EG, ES, FI, GB, GD, GE, GH, GM, GT, HN, HR, HU, ID, IL, IN, IS, JP, KE, KG, KM, KN, KP, KR, KZ, LA, LC, LK, LR, LS, LT, LU, LY, MA, MD, ME, MG, MK, MN, MW, MX, MY, MZ, NA, NG, NI, NO, NZ, OM, PE, PG, PH, PL, PT, RO, RS, RU, SC, SD, SE, SG, SK, SL, SM, ST, SV, SY, TH, TJ, TM, TN, TR, TT, TZ, UA, UG, US, UZ, VC, VN, ZA, ZM, ZW.

(84) Designated States *(unless otherwise indicated, for every kind of regional protection available)*: ARIPO (BW, GH,

[Continued on next page]

(54) Title: METHOD FOR METALLISING OBJECTS WHICH HAVE AT LEAST TWO DIFFERENT PLASTICS ON THE SURFACE

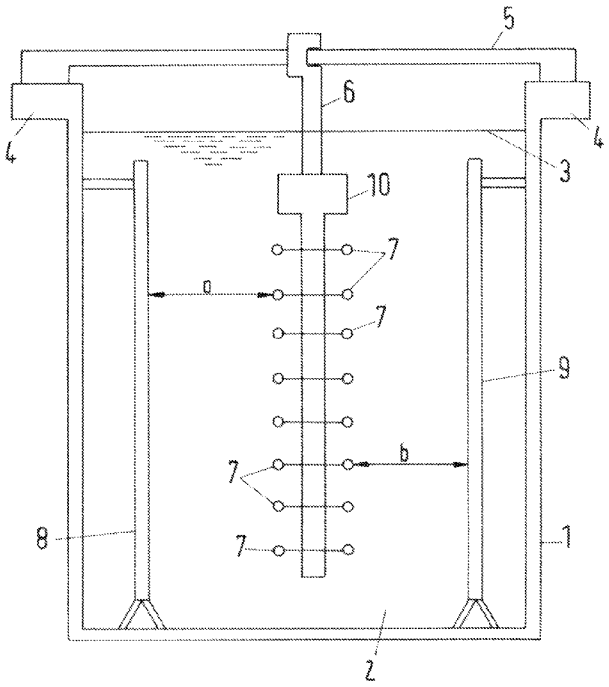

Fig.1

(57) Abstract: The following method is proposed in order to improve selectivity during metallisation of surface areas to be metallised on objects 7 having different plastics while not allowing the areas not to be metallised to be metallised: A) etching of the objects 7 with an etching solution; B) treatment of the objects 7 with a solution of a colloid or with a metal compound, the metal being a metal of Group VIIIB or IB of the Periodic Table of the Elements; and C) electrolytic metallisation of the objects 7 with a metallisation solution. According to the present invention the objects 7 are subjected to ultrasonic treatment during the treatment in a further method step following method step B) and before method step C) in order to avoid metallisation of at least one first plastic exposed on the surface of the objects 7 while at least one second plastic exposed on the surface of the objects 7 is metallised.

WO 2011/098428 A1

GM, KE, LR, LS, MW, MZ, NA, SD, SL, SZ, TZ, UG, ZM, ZW), Eurasian (AM, AZ, BY, KG, KZ, MD, RU, TJ, TM), European (AL, AT, BE, BG, CH, CY, CZ, DE, DK, EE, ES, FI, FR, GB, GR, HR, HU, IE, IS, IT, LT, LU, LV, MC, MK, MT, NL, NO, PL, PT, RO, RS, SE, SI, SK, SM, TR), OAPI (BF, BJ, CF, CG, CI, CM, GA, GN, GQ, GW, ML, MR, NE, SN, TD, TG).

Published:

— *with international search report (Art. 21(3))*

— *before the expiration of the time limit for amending the claims and to be republished in the event of receipt of amendments (Rule 48.2(h))*

Method for metallising objects which have at least two different plastics on the surface

Description:

The present invention is based on a conventional method for metallising objects which have at least two different plastics on the surface. According to the conventional method the objects are A) etched with an etching solution, B) treated with a solution of a colloid or with a solution of a metal compound, the metal being a metal of Group VIIIB or IB of the Periodic Table of the Elements, and C) metallised electrolytically using a metallising solution.

Plastic objects can be metallised using an electroless metallising method or alternatively by using a direct plating method. The object is first cleaned and etched in both methods and then treated with a noble metal and finally metallised. The etching is normally undertaken using chromic acid / sulfuric acid. Etching solutions made on the basis of organic solvents or an alkaline or acid permanganate solution can be used as an alternative for certain plastics. The etching serves to make the surface of the object more accommodating for the subsequent metallisation so that the surfaces of the objects can be wetted well with the respective solutions in the following treatment steps and the deposited metal is adequately firmly bound to the surface. To etch the surface made out of acrylnitrile-butadiene-styrol-copolymer (ABS copolymer), it is etched using chromic acid / sulfuric acid in such a way that surface microcaverns are formed in which metal precipitates and subsequently firmly adheres to the surface there. Once the etching is completed the plastic is activated for electroless metallisation using an activator which contains a noble metal and then electrolessly metallised. A thicker metal layer can then also be applied electrolytically afterwards. In the case of the direct plating method that gets by without using electroless metallisation, the etched surface is usually treated with a palladium colloid solution and then with an alkaline solution which contains copper ions forming a complex with a complexing agent. Thereafter the object can then be electrolytically metallised directly (EP 1 054 081 B1).

In an alternative embodiment for a direct plating method according to US patent 4,590,115, a plastic object is manufactured which contains small electrically non-conductive oxide particles of a non-noble metal, for example copper, in the polymer. The oxide particles exposed on the surface of the object are reduced to a metal using a reducing agent such as a boron hydride. The object can then be coated electrolytically with metal immediately

afterwards or at a later point in time. This document indicates a copper(I) oxide containing object being put in a water bath to be cleaned by the action of ultrasound. The copper(I) oxide in the object is then subsequently reduced to copper using sodium borohydride so that electrolytic copper can be deposited later on the surface of the object.

The influence of ultrasonic irradiation on the kinetics of formation, structure and hardness of electroless nickel deposits is described in M.Y.Abyaneh et al., "Effects of Ultrasonic Irradiation on the Kinetics of Formation, Structure and Hardness of Electroless Nickel Deposits", J. Electrochem. Soc., 154 (9), D467-D472 (2007). Accordingly, the deposition rate of nickel on the steel plate for use of ultrasound in an electroless nickel deposition bath can be significantly increased.

The plastic parts to be metallised are usually manufactured using an injection moulding method. If plastic parts made out of two or more different plastics are manufactured in order to obtain different surface characteristics then they can be manufactured using a so-called multiple injection method. In this process a first plastic is injected into an injection mould and then a second plastic is injected into an injection mould having an altered form and which contains the object being produced in the injection method. Correspondingly, objects made out of three different plastics can be manufactured in an appropriate way.

The requirements upon the pretreatment of the plastic for decorative electroplating of objects made out of plastic or those containing plastic are generally increasing all of the time. A colloidal activator made on a palladium basis is normally used in the case of plastic metallisation. When using this activator, faults in the surface of the object arising from the injection moulding method are covered and therefore concealed. However, objects made in such a way can fail in a subsequent temperature testing method or only after the object is already in its final place of use and, for example, is installed in a device, since it may turn out that the metal layers deposited after activation do not sufficiently adhere to the substrate.

There are also particularly high demands in the case of selective plastic metallisation where the objects to be treated are made from at least two different plastics in order to achieve metallisation of only one part of the surface of the object while the other part of the surface remains unmetallised.

Therefore, activators are normally used which are specially equipped, depending on the respective requirements, concerning their composition or the operating parameters required for their use. A maximum coverage of the surfaces of the object with palladium or

alternatively an optimal selectivity of the different regions of the surface of the object can be set using such activators. If different objects are manufactured in a metallisation plant, a number of containers for the different activators and optionally additional rinsing tanks have to be available, so that altogether a rather extensive plant technology is required as well as a complex plant control system and logistics.

The same applies for the acceleration step required for conventional electroless metallisation of objects made out of plastic which serves to prepare the activated surfaces of the objects for the subsequent electroless metallisation in a suitable manner. This means that partly different accelerators are used for plating objects containing two or three plastics, since these as well have to be adjusted through adaptation of their composition, and the optimised operating parameters for their use, to the selectivity of the metallisation or alternatively also to a maximum palladium coverage on the plastic substrates. It is also necessary to have rather extensive plant technology and a complex control system and logistics in this case.

Despite the measures mentioned above it turns out that the metallisation process is not stable so that there are continuous declines in production with unwanted overgrowths on the surfaces which selectively are not to be coated with metal while, at the same time, it is to be ensured that the surfaces to be metallised are coated flawlessly and without any uncoated areas. It would be quite possible to totally avoid metal depositing on the surfaces not to be metallised with the known process. However, in these cases, it is usually not possible to deposit metal on the surfaces to be metallised securely and flawlessly, that is, completely and without uncoated areas. The above-mentioned problems can arise, for example, through minor deviations in the operating parameters. These problems can, in some events, lead to high scrap rates with an average reject rate of 30 – 50% of the objects.

Therefore the invention is based on the problem that it has not been possible until now, with adequate process security, to achieve selective sharp-edged metallisation of objects on whose respective surfaces at least two different plastics are exposed to obtain secure, flawless metallisation on one of the plastics and a surface which is completely free of deposited metal on the other plastic. Therefore the object of the invention is to guarantee that the areas of the surface not to be metallised are completely free of metal after performing the metallisation step and that the areas of the surface to be metallised are completely and faultlessly covered with metal.

This object is solved through use of the inventive method according to claim 1. Preferred embodiments are indicated in the sub-claims.

As far as a number of objects are mentioned below, and in the claims, which are treated using the method according to the invention, either a number of objects are being referred to or, alternatively, in an appropriate manner, also just respectively one single object.

The method according to the present invention is used to metallise objects which at least partially and preferably completely consist of plastic, in order to provide particularly at least one second surface area of the object fully, that is without any void and without uncoated areas, with a metal layer and to not metallise at least one first surface area, that is to leave this part of the plastic surface totally free of metal. The selectivity of the metallisation is made possible in that there is at least one first plastic on the surface of the object which is not coated by the metal at all and a second plastic which is coated with the metal without any voids. The border between both surface areas has a sharp edge which means that the surface area coated with the metal extends exactly along the surface boundary line between the first surface area and the second surface area.

For example, the object can partially consist of metal or another material and partially of the at least two types of plastic. In a particularly preferred embodiment of the invention the object fully consists of plastic, the majority of which primarily consists of one or optionally a plurality of second plastics which can adherently be metallised and of one or optionally a plurality of first plastics which cannot adherently be metallised or which cannot be metallised at all, which means that this/these plastic(s) completely refuse metal deposition. Preferably, the object consists of one or a plurality of second plastics which can adherently be metallised and of one or a plurality of first plastics which cannot adherently be metallised and which is/are applied at least on the surface thereof to the second plastic(s) which can adherently be metallised.

These types of objects can be used in sanitary areas, in automobile engineering, as a furniture fitting or closing device, for operating elements on electrical or electronic devices, jewellery, spectacles or similar items. Selective metal coating is preferably used due to the different surface properties of the object to achieve decorative effects.

Compared to the conventional methods in which the objects

A) are first etched with an etching solution;

B) are then treated with a solution of a colloid or with a compound, particularly a salt of a metal of Group VIIIB or IB of the Periodic Table of the Elements (noble metal); and

C) are finally metallised electrolytically using a metallising solution,

they are additionally subjected to a treatment in a further method step, being carried out between method steps B) and C) but not during electroless depositing of metal, by being subjected to ultrasonic treatment. This avoids metallisation of at least one first plastic exposed on the surface of the objects while at least one second plastic exposed on the surface of the objects is metallised.

Usually, the above-mentioned method steps A), B) and C) do not necessarily have to be performed immediately one after the other. Typically, further method steps such as rinsing steps and optionally further treatment steps are carried out between these method steps. The object is treated and/or rinsed off in at least one further method step between method steps B) and C). The indicated sequence of the method steps A), B) and C) must be observed, however.

The exposure of ultrasound on the object is applied during any one of the method steps being carried out after treatment of the object with the noble metal colloid solution or with the solution of the noble metal compound according to method step B) and before electrolytically metallising the object in method step C), but not during an electroless metallisation step. For example, rinsing steps can be considered for this which are normally executed between both method steps mentioned, B) and C).

The treatment with ultrasound according to the invention has the effect that no metal coating is deposited at all on the first surface areas of the object or a deposited metal coating is completely removed. In this way the conditions for metallisation on the second surface areas can be adjusted in such a way that the metallisation takes place perfectly and without any problems on these areas, which means that the metallisation conditions do not have to be adjusted in such a way that metallisation on the second plastic areas barely takes place in order to ensure that no metal deposits on the first plastic areas. It is therefore possible to open up a wider processing window for successful metallisation without having any metal deposit on the first surface areas. This guarantees a more secure method management so that faulty metallised objects are not produced. This also leads to a situation where the boundary line between the first plastic, which forms the first surface area of the object, and

the second plastic, which forms the second surface area of the object, is exactly reproduced by the metallisation boundary so that a sharp-edged selective metallisation is achieved.

In a preferred embodiment of the invention a second (to be metallised) plastic is an acrylnitrile-butadiene-styrol copolymer (ABS copolymer) or a polyamide or a mixture of an ABS copolymer and at least one other polymer which is different to the ABS copolymer. Most preferred, the at least one other polymer is polycarbonate (PC). It is preferred, for example, to use ABS/PC blends as the second plastic material.

In a further preferred embodiment of the invention a first plastic is a polycarbonate or a covering lacquer (a stop-off lacquer) used to prevent metallisation of the object. These types of covering lacquer have served for a long time to selectively cover surface areas of work pieces which were to be electroplated in order to avoid depositing of metal in the covered surface areas. This type of covering lacquer is well known to the person skilled in the art. Covering lacquers can be any kind of lacquer which prevent, in particular, metal deposition and also ensure that they adhere well to the plastic body so that no electroplating liquid can penetrate at the interface between the covering lacquer and the plastic body. Prevention of metallisation is, for example, achieved by adding substances which inhibit electroless metallisation, for example lead compounds such as lead acetate, lead chloride or cadmium acetate. For example, covering lacquers are used on the basis of solutions of tar compounds.

In a preferred embodiment of the invention at least one of the following additional method steps are performed between the method steps B) and C), wherein ultrasonic treatment may be performed in one or some or a plurality of these method steps:

- Ba1) Rinsing the objects in a rinsing solution;
- Bb1) Treating the objects in an accelerating solution or in a reducing agent solution;
- Bc1) Rinsing the objects in a rinsing solution;
- Bd1) Electroless metallisation of the objects in an electroless metallisation solution; and
- Be1) Rinsing the objects in a rinsing solution.

In this preferred embodiment, these further method steps are carried out when the objects are to be metallised using an electroless metallisation method which means that a first metal layer is applied on the objects using an electroless method.

The method steps Ba1), Bb1), Bc1), Bd1) and Be1) are performed in the sequence given, but not necessarily immediately one after the other. For example, a plurality of rinsing steps can be performed respectively instead of each individual of the rinsing steps Ba1), Bc1), Be1).

Most preferably, ultrasonic treatment is performed in method step Be1), *i.e.*, during the rinsing of the objects after electroless metallization has been performed. In this case, further ultrasonic treatment may also be performed in any of the further method steps Ba1), Bb1) and Bc1).

The accelerating solution preferably serves to remove components of the colloid of the colloid solution according to method step B), for example a protective colloid. If the colloid of the colloid solution according to method step B) is a palladium/tin colloid, a solution of an acid is preferably used as an accelerating solution, for example sulfuric acid, hydrochloric acid, citric acid or also tetrafluoboric acid, in order to remove the protective colloid (tin compounds). The reducing agent solution is used if a solution of a compound of a noble metal is used in method step B), for example a hydrochloric acid solution of palladium chloride or an acid solution of a silver salt. The reducing agent solution in this case is also a hydrochloric acid solution and, for example, contains tin(II) chloride, or it contains another reducing agent such as NaH_2PO_2 or a borane or boron hydride, such as an alkali or earth alkali borane or dimethylaminoborane.

In a further preferred embodiment of the invention the objects are subjected to ultrasonic treatment during at least one of the method steps Ba1), Bb1), Bc1), Be1) wherein the ultrasonic treatment can be done, if a number of rinsing steps are performed instead of just one rinsing step in one or some or in each one of the respective method steps Ba1), Bc1) or Be1), in one of the rinsing steps, in some of the rinsing steps or in all of the rinsing steps, which means that the objects are subjected to ultrasonic treatment in one of the method steps or a plurality of the method steps, including the rinsing steps, after treatment with the colloid solution or with the reducing agent solution, but not, on the other hand, in the method step in which the objects are electroless metallised. The reason is that the electroless metallisation bath would not be stable under the effect of ultrasound. It is possible that catalytic nuclei deposited on the surface of the objects are stripped off by the ultrasonic treatment and, in this way, find their way into the electroless metallisation bath. They would start unintended electroless depositing of metal there. It is, however, possible that the ultrasonic treatment is performed in any one of the method steps following colloid treatment or following treatment with a reducing agent solution.

If, on the other hand, a method is preferred in which the objects are not metallised electrolessly but are to be directly metallised using an electrolytic metallisation process (without electroless metallisation), then at least one of the following further method steps are performed in this further preferred embodiment of the invention between method steps B) and C):

Ba2) Rinsing the objects in a rinsing solution;

Bb2) Treatment of the objects in a conversion solution so that a sufficiently electrically conductive layer is formed on the surface of the objects for direct electrolytic metallisation; and

Bc2) Rinsing the objects in a rinsing solution.

The method steps Ba2), Bb2) and Bc2) are performed in the sequence given, but not necessarily immediately one after the other. For example, a plurality of rinsing steps can be performed respectively instead of each individual of the rinsing steps Ba2) and Bc2).

The conversion solution preferably serves to create a sufficiently electrically conductive layer on the surface of the objects in order to subsequently allow direct electrolytic metallisation, without preceding electroless metallisation. If the colloid of the colloid solution according to method step B) is a palladium/tin colloid then an alkaline solution containing copper ions complexed with a complexing agent is preferably used as a conversion solution. For example the conversion solution can contain an organic complexing agent such as tartaric acid or ethylenediaminetetraacetic acid and/or one of its salts such as a copper salt such as copper sulfate.

In a further preferred embodiment of the invention the objects are subjected to ultrasonic treatment during at least one of the method steps Ba2), Bb2), Bc2) wherein the ultrasonic treatment can be done, when a number of rinsing steps are carried out instead of one rinsing step in one or some or in each one of the respective method steps Ba1), Bc1) or Be1), in one of the rinsing steps, in some of the rinsing steps or in all of these rinsing steps, which means that the objects are subjected to ultrasonic treatment in one of the method steps or a plurality of the method steps, including the rinsing steps, after treatment with the colloid solution. The ultrasonic treatment can be performed in any of the method steps after the colloid treatment.

In order to treat objects with ultrasound in a preferred embodiment of the invention, to execute the method steps, the objects are immersed in treatment tanks containing the respective solutions, with additionally at least one ultrasound emitter being in the respective

solution in the treatment tank, in which an ultrasonic treatment is carried out, to expose the objects to ultrasound. Such ultrasound emitters are usually ultrasound generators and ultrasound resonators made in the form of flat plates. These generators can be located in a plane in the treatment tank for efficient ultrasonic treatment which is parallel to the plane in which the objects to be treated are located or which is arranged parallel to this plane. If the objects are, for example, fastened to a rack which has a main plane, the ultrasound generator can be located parallel to this rack plane in the tank. In this way it is possible to obtain a treatment as uniformly as possible of all of the objects fastened to the rack, as the distance between the ultrasound generator and the objects is always the same.

In a particularly advantageous embodiment of the invention the ultrasound emitter is located on one side of the objects. An additional ultrasound reflector or a further ultrasound emitter can be located on the other side of the objects. Both, the first ultrasound emitter and the second ultrasound emitter or, alternatively, the ultrasound reflector can each have a flat shape. The ultrasound reflector can, for example, be a metal plate, for example a stainless steel plate (reflection plate).

In the above-mentioned embodiments of the invention the ultrasound emitter(s) for treatment of the objects are immersed in the solution in which the objects will be treated. The ultrasound energy in this case is transmitted from the one or more ultrasound emitters through the solution as the medium to the objects.

As an alternative, an ultrasound emitter can also transmit ultrasound energy to the objects via a holder on which the objects are held, for example a rack. To do this, the ultrasound emitter can, for example, be placed on a receptacle for holding the rack in the treatment tank and fastened there so that the ultrasound energy is transmitted via this receptacle and the holder to the objects.

The treatment liquids described below are preferably aqueous.

In a preferred embodiment of the invention the etching solution is a chromic acid / sulfuric acid solution. Such solutions typically contain 300 – 400 g/l CrO_3 and 300 – 400 g/l of conc. H_2SO_4 in water. Particularly preferred is a solution which contains CrO_3 in a concentration of 360 – 400 g/l and a particularly preferred concentration of 375 – 385 g/l as well as H_2SO_4 in a concentration of 360 – 400 g/l and a particularly preferred concentration of 375 – 385 g/l. The chromic acid / sulfuric acid can also contain a fluorosurfactant to obtain optimal wetting of the surfaces. The chromic acid / sulfuric acid can also contain palladium ions, for example in the

form of a salt, for example palladium chloride. The palladium ions can be present in a concentration of, for example, 5 – 100 mg/l, particularly preferred of 7 – 50 mg/l and most preferred of 10 – 30 mg/l, based on Pd^{2+}. The chromic acid / sulfuric acid is preferably used at a temperature above room temperature, for example at 30 – 90°C, particularly preferred at 60 – 80°C and most preferred at 65 – 75°C. The treatment time is preferably 5 – 30 min, particularly preferred 10 – 20 min.

After etching using chromic acid / sulfuric acid it is preferable to carry out a reduction treatment in a reducing agent solution, preferably after one, preferably after a plurality of rinsing steps, for example three, during which the chromium(VI) ions remaining on the surface of the object are reduced to chromium(III) ions. It is preferable to use an aqueous solution of sodium sulfite to do this or a hydroxylammonium salt, for example the chloride or the sulfate. This solution is also used at a temperature above room temperature, for example at 30 – 60°C, particularly preferred at 40 – 50°C. The treatment time is preferably 0.5 – 5 min, particularly preferred 1 – 3 min and most preferred 1.5 – 2.5 min.

An alternative to etching in the chromic acid / sulfuric acid can also be etching in a sodium or potassium permanganate solution. This solution can be acid or alkaline. To be acidic, it can particularly contain sulfuric acid, and to be alkaline, it can particularly contain sodium hydroxide. Potassium permanganate can be present in a concentration of up to about 70 g/l and sodium permanganate in a concentration of up to about 250 g/l. The lower concentration limit of each of these salts is typically 30 g/l. If the solution is alkaline, it contains 20 – 80 g/l for example, but preferably 30 – 60 g/l NaOH. In this case it can also contain a fluorosurfactant to improve wetting of the surfaces of the objects. Further, as in the case of chromic acid / sulfuric acid, it can contain palladium ions, for example in the form of a palladium salt, in particular palladium chloride, in a concentration, for example, of 5 – 100 mg/l, particularly preferred 7 – 50 mg/l and most preferred 10 – 30 mg/l, based on Pd^{2+}. The permanganate solution is preferably used at a temperature above room temperature, for example at 60 – 95°C, particularly preferred 80 – 90°C. The treatment time is preferably 5 – 30 min, particularly preferred 10 – 20 min.

After treatment with the permanganate solution the objects are subjected to reduction treatment in a reducing agent solution, after rinsing off the excess permanganate solution, in one or a plurality of, preferably three, rinsing steps, in order to reduce the permanganate still adhering on the surfaces of the objects to manganese(II) ions. Preferably, in this case an acid solution of hydroxylammonium sulfate or chloride is used or an acid solution of hydrogen peroxide.

In a preferred embodiment of the invention the solution of the colloid of the metal of Group VIIIB or IB of the Periodic Table of the Elements is an activator solution containing a palladium/tin colloid. This colloid solution preferably contains palladium chloride, tin(II) chloride and hydrochloric acid or sulfuric acid. The concentration of the palladium chloride is preferably 5 – 100 mg/l, particularly preferred 20 – 50 mg/l and most preferred 30 – 45 mg/l, based on Pd^{2+}. The concentration of the tin(II) chloride is preferably 0.5 – 10 g/l, particularly preferred 1 – 5 g/l and most preferred 2 – 4 g/l, based on Sn^{2+}. The concentration of the hydrochloric acid is preferably 100 – 300 ml/l (37% by weight of HCl). Furthermore, a palladium/tin colloid solution also preferably contains tin(IV) ions which are generated through oxidation of the tin(II) ions. The temperature of the colloid solution is preferably 20 – 50°C and particularly preferred 30 – 40°C. The treatment time is preferably 0.5 – 10 min, particularly preferred 2 – 5 min and most preferred 3.5 – 4.5 min.

As an alternative the colloid solution can also contain another metal of Group VIIIB or IB of the Periodic Table of the Elements, for example platinum, iridium, rhodium, gold or silver or a mixture of these metals. It is basically possible for the colloid not to be stabilised with tin ions as a protective colloid but rather another protective colloid being used instead, for example an organic protective colloid like polyvinyl alcohol.

If a solution of a noble metal compound is used instead of a colloid solution, preferably a solution is used which contains an acid, in particular hydrochloric acid, and a noble metal salt. The noble metal salt can, for example, be a palladium salt, preferably palladium chloride, palladium sulfate or palladium acetate, or a silver salt, for example silver acetate. As an alternative a noble metal complex can also be used, for example a palladium complex salt such as a salt of a palladium-aminopyridine complex. The noble metal compound is present, for example, in a concentration of 40 mg/l to 80 mg/l, based on the noble metal, for example based on Pd^{2+}. The solution of the noble metal compound can be used at 25°C or at a temperature from 25°C to 70°C.

Before bringing the objects in contact with the colloid solution, the objects are preferably first brought into contact with a pre-dipping solution which has the same composition as the colloid solution but without the metal of the colloid and its protective colloid, which means that this solution, in the case of a palladium/tin colloid solution, just contains hydrochloric acid if the colloid solution also contains hydrochloric acid. The objects are brought directly into contact with the colloid solution after treatment in the pre-dipping solution, without rinsing off the objects.

After treating the objects with the colloid solution these are typically rinsed and then brought into contact with the accelerating solution in order to remove the protective colloid from the surface of the objects.

If the objects are treated with a solution of a noble metal compound instead of a colloid solution they will be subjected to a reduction treatment after first being rinsed. The reducing agent solution used for these cases contains hydrochloric acid and tin(II) chloride if the solution of the noble metal compound is a hydrochloric acid solution of palladium chloride. It is, however, preferable to use an aqueous solution of NaH_2PO_2.

For electroless metallisation, the objects can first be rinsed after the acceleration or treatment with reducing agent solution and then electrolessly plated with nickel, for example. A conventional nickel bath will serve to do this which, for example, contains a number of substances including nickel sulfate, a hypophosphite, for example sodium hypophosphite, as a reducing agent, and organic complexing agents and pH adjusting agents (for example a buffer).

As an alternative, an electroless copper bath can be used which typically contains a copper salt, for example copper sulfate or copper hypophosphite, and also a reducing agent such as formaldehyde or a hypophosphite salt, for example an alkali or ammonium salt, or hypophosphorous acid, and also one or more complexing agents such as tartaric acid, as well as a pH adjusting agent such as sodium hydroxide.

Any metal depositing baths can be used for the subsequent electrolytic metallisation, for example for depositing nickel, copper, silver, gold, tin, zinc, iron, lead or their alloys. This type of depositing bath is well known to the person skilled in the art. A Watts nickel bath is normally used as a bright nickel bath which contains nickel sulfate, nickel chloride and boric acid as well as saccharine as an additive. As a bright copper bath a composition is used which, for example, contains copper sulfate, sulfuric acid, sodium chloride as well as organic sulfur compounds, in which the sulfur is present in a low oxidation stage, for example as an organic sulfide or disulfide, as additives.

If a direct electroplating process is used, that is, a first metal layer is not deposited electrolessly but rather after treatment of the objects with the conversion solution and deposited electrolytically after the optional subsequent rinsing treatment, then an electrolytic metallisation bath is used, for example a nickel strike bath, which is preferably composed on

the basis of a Watts nickel bath. These types of baths for example contain nickel sulfate, nickel chloride and boric acid and saccharine as an additive.

Treatment of the objects according to the method according to the invention is preferably performed in a conventional dipping process in which the objects are dipped subsequently in solutions in containers in which the respective treatment takes place. In this case the objects can either be fastened to racks or filled into drums and dipped in the solutions. Fastening to racks is preferred because a more directed transmission of the ultrasound energy to the objects is possible via the racks. Alternatively, the objects can be treated in so-called conveyorized processing plants in which they lay, for example, on racks and are continuously transported in a horizontal direction through the plant and treated with ultrasound, as required.

The following description of examples shall further elucidate the invention. The figure shown also serves to further illustrate the invention. Both the examples and the figure shall not in any way be construed as limitation of the scope of the invention being protected.

Fig. 1: shows a schematic diagram of a treatment tank with an object to be treated and an ultrasound emitter as well as an ultrasound reflector.

Fig. 1 shows a treatment tank 1 which contains a treatment solution 2 which reaches the liquid level 3 in the treatment tank 1. The treatment liquid 2 can, for example, be a rinsing liquid or the colloid solution or an accelerating solution or also another treatment liquid in which the objects are treated according to the invention with ultrasound. The treatment tank 1 is designed according to the type of treatment liquid 2 for the respective treatment to fulfil the required functions in this treatment liquid 2. The treatment tank 1 can, for example, be equipped with a heater, a filter system, an air injection system, means for moving the objects, vibrating systems for the objects, circulating pumps, metering devices and similar items. The suitable design required for this will be well-known to the person skilled in the art and will be selected appropriately.

There are mounts for a goods carrier rod 5 on the upper edge 4 of the treatment tank 1. This goods carrier rod 5 fully extends over the treatment tank 1. There is a rack 10 hung on the goods carrier rod 5 over a suspension mounting 6 on which a number of objects 7 to be treated are fastened. The rack 10 with the objects 7 is located in the middle and parallel to a vertical plane in the tank 1. There is also an ultrasound emitter 8 located vertically and parallel to this plane at a distance a from the objects which is formed in the form of a plate. In

this case it is fastened to the floor and to the side walls of the treatment tank 1. There is a second ultrasound emitter 9 in the tank also located vertically and parallel to this plane on the other side of the rack, at a distance b from the objects. It is, however, possible to use a steel plate instead of the second ultrasound emitter 9 which reflects the ultrasound waves emitted by the first ultrasound emitter 8. The distances a and b preferably are the same. This arrangement allows for obtaining a very even treatment of the objects 7 on the rack 10.

The following examples were all performed respectively with an arrangement involving an ultrasound emitter and an ultrasound reflector in the form of a steel plate, under the conditions given in each respective example.

Different parts were used for performing the following examples which were manufactured in a double injection process from ABS and a partial over-injection of the ABS base body with polycarbonate: a PQ rotary knob, a Start/Stop press-button, a thumb lever holder as well as a cap with slits.

The parts mentioned were treated in all experiments according to the processing sequence described in Tab. 1, the respective changes being made in the treatment conditions in the individual examples compared to those given in Tab. 1 and the ultrasonic treatment being performed variously. The parts were respectively treated up to metallisation with bright copper for examining the selectivity of the metallisation that means complete, flawless metallisation in the areas which were to be metallised and for examining the total prevention of metallisation in those areas which were not to be metallised. In order to establish the degree of perfection an examination was undertaken to see whether the parts had faulty areas in the regions to be metallised, that is deficient metallisation (blow throughs, voids) and overgrowths in the regions which were not to be metallised, that is metallisation at least in some areas and therefore faulty treatment.

Comparative Example 1:

9 thumb lever holders and 10 PQ rotary knobs were fastened to a rack (surface area: 6 dm^2). These parts were treated according to the method described in Tab. 1 with the following changes being made:

8) Activator: 2x 1 min (1x H/S)
9) (clean) flow rinsing: 1 min, air injection

10) Acceleration: 50°C, 4 min., air injection
14) Rinsing twice after electroless nickel coating: air injection
17) A nickel strike instead of a copper strike (Adhemax IC copper): 1 min, 0.5 A/dm^2, up to expiry of 5 min 1 A/dm^2
18) Cupracid: 20 min, 3 A/dm^2

Ultrasound was not used in any of the method steps.

Results: There were overgrowths found on all of the areas not to be metallised in the polycarbonate areas on all 9 thumb lever holders as well as on 8 of the 18 PQ rotary knobs. Therefore these parts had to be thrown away as scrap so that 100% of the thumb lever holders and 44% of the PQ rotary knobs were thrown away as scrap.

Example 2 according to the invention:

72 thumb lever holders (with an area of 15 dm^2) fastened to a complete rack were treated using the process according to Tab. 1 with the following changes being made:

8) Activator: 2x 1 min (1x H/S), composition: Pd^{2+}: 17.4 mg/l, Sn^{2+}: 1.00 g/l, HCl (37% by weight): 239 ml/l
9) (clean) rinsing: 1 min, air injection
10) Acceleration: 50°C, 4 min., air injection
13) Adhemax Ni LFS: 8 min, 35°C
14) Rinsing twice: air injection
15) Rinsing while applying ultrasound at the same time: 4 min, 48°C
16) Etching slightly: 0.5 min
17) A nickel strike instead of a copper strike (Adhemax IC copper): 1 min, 0.5 A/dm^2, up to expiry of 5 min 1 A/dm^2
17a) Etching slightly: 0.5 min
18) Cupracid: 20 min, 3 A/dm^2

Thus ultrasound was used in this case in the rinsing phase after the electroless depositing of nickel.

The parts were subsequently rinsed, activated, coated with bright nickel (10 min) and then coated with chromium (2 min).

Thus ultrasound was used in a second rinsing tank after the electroless nickel plating. The frequency of the ultrasound used was 40 kHz.

Results: 71 of the thumb lever holders showed no signs of overgrowths on them in the areas not to be metallised and voids in the areas to be metallised. Just one part demonstrated a minimal level of overgrowth with a width of 1 mm on a stay. Thus 99.5 % of all Start/Stop knobs could be qualified as flawless regarding the selectivity of metallisation in the areas to be metallised and prevention of metallisation in the areas not to be metallised.

Example 3 according to the invention:

In one further experiment the method according to the Example 2 of the invention was used to treat 72 thumb lever holders fastened to a rack (with a surface of 15 dm^2), but with an altered activator composition (Pd^{2+}: 18.9 mg/l, Sn^{2+}: 1.40 g/l, HCl (37% by weight): 241 ml/l).

Thus ultrasound was used in this case in a second rinsing tank after the electroless nickel plating. The frequency of the ultrasound used was 40 kHz.

Results: 71 of the 72 thumb lever holders were flawless which means that there were no overgrowths in the areas not to be metallised and no voids in the areas to be metallised, while a blow through was observed on just one 1 thumb lever holder. Thus 98.5% of all parts were perfect.

Example according to the invention 4:

162 PQ rotary knobs (with an area of 30 dm^2) were fastened to a complete rack and treated under the same conditions as the Start/Stop knobs from Example 2 of the invention.

Thus ultrasound was also used in this case in a second rinsing tank after the electroless nickel plating. The frequency of the ultrasound used was again 40 kHz.

Results: Random sampling producing 60 checked parts delivered a 100% flawless result regarding the selectivity of metallisation.

Example 5 of the invention:

In one further experiment the method according to Example 4 of the invention was used to treat 162 PQ rotary knobs (with a surface of 30 dm^2) fastened to a rack, but with an altered activator composition (Pd^{2+}: 18.9 mg/l, Sn^{2+}: 1.40 g/l, HCl (37% by weight): 241 ml/l).

Thus ultrasound was also used in this case in a second rinsing tank after the electroless nickel plating. The frequency of the ultrasound used was again 40 kHz.

Results: Random sampling producing 30 checked parts showed that 28 parts, that is 93.4%, were flawless: There were tiny pointlike voids on the black part in the case of two of the PQ rotary knobs. However, all areas not to be metallised were totally free of metal on these parts (no overgrowths). The other 28 parts were flawless regarding both the absence of metal in the areas not to be metallised as well as regarding coverage with metal in the areas to be metallised.

Example 6 of the invention:

In one further experiment all four articles (PQ rotary knobs, Start/Stop press-buttons, thumb lever holder and cap with slits) were fastened to a multiple rack with a surface of 10 dm^2.

The treatment conditions for the parts were essentially the same as for the Example 2 of the invention with the following differences:

8) Activator: 2x 2 min
10) Acceleration: 3 min, 50°C, air injection
14) Rinsing twice: air injection
15) Rinsing with ultrasound: 3 min

The parts were not metallised using bright nickel and chromium.

Thus ultrasound was also used in this case in a second rinsing tank after the electroless nickel plating. The frequency of the ultrasound used was again 40 kHz.

Results:
PQ rotary knob: 9 parts were flawless while 4 parts demonstrated minimal overgrowth in the areas not to be metallised: thus 70% of all parts were flawless;
Start/Stop press-button: 8 parts were flawless; 2 parts demonstrated blow throughs which means that 80% of all parts were flawless;

Thumb lever holder: all 6 parts, that is 100% of all parts were flawless;
Cap with slits: all 10 parts, that is 100% of all parts were flawless.

Examples 7 – 18 of the invention:

Further experiments were conducted with the above-mentioned injection-moulded parts as well as with a sleeve, also comprising an ABS base body which was sprayed over with polycarbonate in a double injection process on a sleeve edge. The method sequence used here is shown in Tab. 2.

Tab. 3 shows the respective underlying conditions for the individual experiments whereby the respective deviations from these conditions given in Tab. 2 are listed separately.

The results of the selective metallisation achieved with these experiments are shown in Tab. 4.

Table 1: Method Sequence for the Plastic Metallisation

Operation	Temperature [°C]	Treatment period [min]	Movement of the liquid
1) Precleaning UniClean 151	55	2	Circulation
2) Rinsing		0.5	
3) ABS etching [1])	68	1, then 1x H/S *) (10 s), then a further 11	AI, WB **)
4) Rinsing		0.5	AI **)
5) Adhemax ® Neutralizer Cr [2])	30	0.5, then 1x H/S *) (10 s), then a further 0.5	AI **)
6) Rinsing		0.5	AI **)
7) Pre-dipping solution [3])	25	0.5	AI **)
8) Adhemax ® Activator SF [4])	30	0.5-4, partially H/S *)	WB **)
9) Rinsing		0.5	AI **)
10) Adhemax ® Accelerator SF [5])	45-55	2-5	AI or US **)
11) Rinsing			AI **)
12) Optional rinsing with US **)	20-50	3	DI water **)
13) Adhemax ® Ni LFS [6]) ***)	35	10	
14) Rinsing		0.5	
15) Optional rinsing with US **)	20-50	3	DI water **)
16) Slight etching H_2SO_4 50 g/l	25	1	
17) Adhemax ® IC Copper ****)	30	1 or 2	
18) Acid copper Cupracid ® 5000 ****)	25	20	
19) Flow rinsing twice		0.5	
20) Slight etching	25	1	

Table 1: Method Sequence for the Plastic Metallisation, continuation

21) Rinsing		0.5	
22) Bright nickel UniBrite 2002 *****)	55	10	
23) Rinsing		20 s	
24) Chromium activation	25	1	
25) Bright chromium Cr 843 ******)	40	2	
26) Rinsing		0.5	
27) Adhemax ® Neutralizer Cr [2])	45	1	
28) Rinsing		0.5	
29) Drying		10	

[1]) Composition: 380 g/l chromic acid (CrO_3), 380 g/l H_2SO_4, 1 ml/l wetting agent, 12 mg/l Pd^{2+} (as $PdCl_2$); (in addition about 20 g/l Cr^{3+})
[2]) Composition: Hydroxylamine compound, alternatively also a sulfide compound is possible, alternatively also in combination with admixtures of mineral acid (hydrochloric acid or sulfuric acid)
[3]) Composition: 300 ml/l HCl (37% by weight):
[4]) Composition: Pd^{2+}, Sn (Sn^{2+} + Sn^{4+}), HCl (as mentioned in the respective examples)
[5]) Composition: 20-70 ml/l 96% by weight sulfuric acid, 40-100 g/l oxalic acid, nitrate compounds
[6]) Composition: contains Ni^{2+}, reducing agent, complexing agent, organic and inorganic stabilisers, ammonium compounds
® registered trademarks assigned to Atotech Deutschland GmbH in various countries
*) the parts to be treated were lifted up and lowered a number of times in their position in the bath in the processing tank in order to obtain an additional mechanical movement in the operating process (improvement of the rinsing effect through liquid flowing off many times)
**) AI: air injection; WB. movement of goods; FL: flooding; US: ultrasound; DI: demineralised
***) electroless nickel bath, pH 9,1
****) electrolytic copper bath (bright copper, acid copper bath)
*****) electrolytic nickel bath (Watts nickel bath)
******) electrolytic chromium bath

Table 2: Method Sequence for the Plastic Metallisation

Operation	Temperature [°C]	Current density [A/dm^2]	Treatment period [min]	Movement of the liquid
Etching [1])	68		15	AI *)
Adhemax ® Neutralizer	45		2	AI *)
Pre-dipping solution [2])	30		0.5	AI *)
Adhemax ® Activator SF	35		4	WB *)
Rinsing			0.5	WB *)
Treatment with ultrasound [3])	25, 45, 50		2-6	WB *)
Adhemax ® Accelerator 1	45		5	AI *)
Adhemax ® Ni LFS **)	40		8	FL *)
Cuflex ® 337 ***)	RT *)	2.2	8	AI *)
Cupracid ® 5000 ***)	RT *)	3	25	WB/AI *)
UniBrite 2002 ****)	55	4	15	WB/AI *)
Cr 843 *****)	40	10		

® registered trademarks assigned to Atotech Deutschland GmbH
[1]) 380 g/l CrO_3, 380 g/l conc. H_2SO_4, 2 ml/l fluorosurfactant, 12 mg/l Pd^{2+}
[2]) 300 ml/l HCl (37% by weight):
[3]) DI water, treatment with 40 kHz, 13 W/L
*) AI: air injection; WB. movement of goods; RT: room temperature; FL: flooding
**) electroless nickel bath
***) electrolytic copper bath (bright copper, acid copper bath)
****) electrolytic nickel bath (Watts nickel bath)
*****) electrolytic chromium bath

Table 3: Method Conditions for Examples 7 – 18

Operation	Inv. Example 7	Inv. Example 8	Inv. Example 9	Inv. Example 10	Inv. Example 11	Inv. Example 12
Etching *)	+	+	+	+	+	+
Adhemax ® Neutralizer	+	+	+	+	+	+
Pre-dipping solution **)	+	+	+	+	+	+
Adhemax ® Activator SF	+ [1]	+ [1]	2 [3] [1]	+ [1]	+ [2]	+ [2]
Rinsing	./.	./.	./.	+	+	+
Treatment with ultrasound in DI water	2 [3] [4]	2 [3] [4]	2 [3] [4]	2 [3] [5]	4 [3] [6]	4 [3] [6]
Adhemax ® Accelerator 1	+	+	+	+	+	+
Adhemax ® Ni LFS ***)	+	+	+	+	+	+
Cuflex ® 337 ****)	+	+	+	+	+	+
Cupracid ® 5000 ****)	+	+	+			
UniBrite 2002 *****)			+			+
Cr 843 ******)			+			+

® registered trademarks assigned to Atotech Deutschland GmbH
*) 380 g/l CrO_3, 380 g/l H_2SO_4, 2 ml/l fluorosurfactant, 12 mg/l Pd^{2+}
**) 300 ml/l HCl (37% by weight):
***) electroless nickel bath, pH 8.8 – 9.3
****) electrolytic copper bath (bright copper, acid copper bath)
*****) electrolytic nickel bath (bright nickel bath, Watts nickel bath)
******) electrolytic chromium bath
[1]) Composition: 41.3 mg/l Pd^{2+}; 2.9 g/l Sn^{2+}; 260 ml/l HCl (37% by weight)
[2]) Composition: 30 mg/l Pd^{2+}; 2 g/l Sn^{2+}; 261 ml/l HCl (37% by weight)
[3]) Treatment period: 2 or 4 min
[4]) [5]) [6]) Temperature for the ultrasonic treatment: 4: 25°C, 5: 45°C, 6: 50°C

Table 3: Method Conditions for Examples 7 – 18, continuation

Operation	Inv. Example 13	Inv. Example 14	Inv. Example 15	Inv. Example 16	Inv. Example 17	Inv. Example 18
Etching *)	+	+	+	+	+	+
Adhemax ® Neutralizer	+	+	+	+	+	+
Pre-dipping solution **)	+	+	+	+	+	+
Adhemax ® Activator SF	2 [3])[1])	2 [3])[1])	+ [1])	2 [3])[1])	2 [3])[1])	+ [1])
Rinsing	+	./.	./.	./.	+	+
Treatment with ultrasound in DI water	4 [3])[6])	./.	:/.	./.	./.	./.
Adhemax ® Accelerator 1, ultrasonic treatment	+	+ [6])	+ [6])	+ [6])	+ [6])	6 [3])[6])
Adhemax ® Ni LFS ***)	+	+	+	+	+	+
Cuflex ® 337 ****)		+	+	+	+	+
Cupracid ® 5000 ****)		./.	./.	./.	+	+
UniBrite 2002 *****)		./.	./.	./.	+	+
Cr 843 ******)		./.	./.	./.	+	+

® registered trademarks assigned to Atotech Deutschland GmbH
*) 380 g/l CrO_3, 380 g/l H_2SO_4, 2 ml/l fluorosurfactant, 12 mg/l Pd^{2+}
**) 300 ml/l HCl (37% by weight):
***) electroless nickel bath: pH 9.1
****) electrolytic copper bath (bright copper, acid copper bath)
*****) electrolytic nickel bath (bright nickel bath, Watts nickel bath)
******) electrolytic chromium bath
[1]) Composition: 41.3 mg/l Pd^{2+}; 2.9 g/l Sn^{2+}; 260 ml/l HCl (37% by weight)
[2]) Composition: 30 mg/l Pd^{2+}; 2 g/l Sn^{2+}; 261 ml/l HCl (37% by weight)
[3]) Treatment period: 2 or 4 min or 6 min
[4])[5])[6]) Temperature for the ultrasonic treatment: 4: 25°C, 5: 45°C, 6: 50°C

Table 4: Results of the Examples 7 – 18 of the invention

Invention Example	Result
7	flawless metallisation, no overgrowths
8	flawless metallisation, no overgrowths
9	flawless metallisation, light overgrowths on the contact points on the edge of the sleeve not to be metallised
10	flawless metallisation, light overgrowths on the contact points on the edge of the sleeve not to be metallised
11	flawless metallisation, no overgrowths
12	flawless metallisation, no overgrowths
13	flawless metallisation, light overgrowths on the contact points on the edge of the sleeve not to be metallised
14	flawless metallisation, no overgrowths
15	flawless metallisation, no overgrowths
16	flawless metallisation, no overgrowths
17	flawless metallisation, no overgrowths
18	flawless metallisation, no overgrowths

Claims:

1. A method for metallising objects which have at least two different plastics on the surface, comprising the following method steps:
   A) Etching of the objects with an etching solution;
   B) Treating the objects with a solution of a colloid or with a solution of a metal compound, the metal being a metal of Group VIIIB or IB of the Periodic Table of the Elements;
   C) Electrolytically metallising the objects with a metallisation solution,
   the method further comprising subjecting the objects to ultrasonic treatment during a treatment in an additional method step performed after performing method step B) and before method step C), not however in electroless depositing of metal, to avoid metallisation of at least one first plastic exposed on the surface of the objects while at least one second plastic exposed on the surface of the objects is metallised.

2. The method according to claim 1, wherein the second plastic is a plastic selected from the group comprising an acrylnitrile-butadiene-styrol copolymer (ABS copolymer), a polyamide, and a mixture of an ABS copolymer with at least one polymer which is different to the ABS copolymer.

3. The method according to claim 2, wherein the at least one other polymer which is different to the ABS polymer is a polycarbonate.

4. The method according to any one of claims 2 and 3, wherein the first plastic is a polycarbonate or a covering lacquer used to prevent metallisation of the object.

5. The method according to any one of the preceding claims, further comprising at least one of the following further method steps between method steps B) and C):
   Ba1) Rinsing the objects in a rinsing solution;
   Bb1) Treating the objects in an accelerating solution or a reducing agent solution;
   Bc1) Rinsing the objects in a rinsing solution;
   Bd1) Electroless metallising the objects in an metallisation solution; and
   Be1) Rinsing the objects in a rinsing solution.

6. The method according to claim 5, further comprising subjecting the objects to ultrasonic treatment during treatment in at least one of the method steps Ba1), Bb1), Bc1), Be1).

7. The method according to any one of claims 1 – 4, further comprising at least one of the following further method steps between method steps B) and C):
   Ba2) Rinsing the objects in a rinsing solution;
   Bb2) Treating the objects in a conversion solution so that an sufficiently electrically conductive layer is formed on the surface of the objects for direct electrolytic metallisation; and
   Bc2) Rinsing the objects in a rinsing solution.

8. The method according to claim 7, further comprising subjecting the objects to ultrasonic treatment during treatment in at least one of the method steps Ba2), Bb2), Bc2).

9. The method according to any one of the preceding claims, further comprising immersing the objects in treatment tanks containing the respective solutions to execute the method steps and providing at least one ultrasound emitter in the respective solution in the treatment tank in which an ultrasonic treatment is carried out to expose the objects to ultrasound.

10. The method according to claim 9, further comprising arranging the ultrasound emitter on one side of the objects and arranging an ultrasound reflector or a further ultrasound emitter on the other side of the objects.

11. The method according to any one of the preceding claims, wherein the etching solution is a chromic acid / sulfuric acid solution.

12. The method according to any one of the preceding claims, wherein the solution of the colloid is an activator solution comprising a palladium/tin colloid.

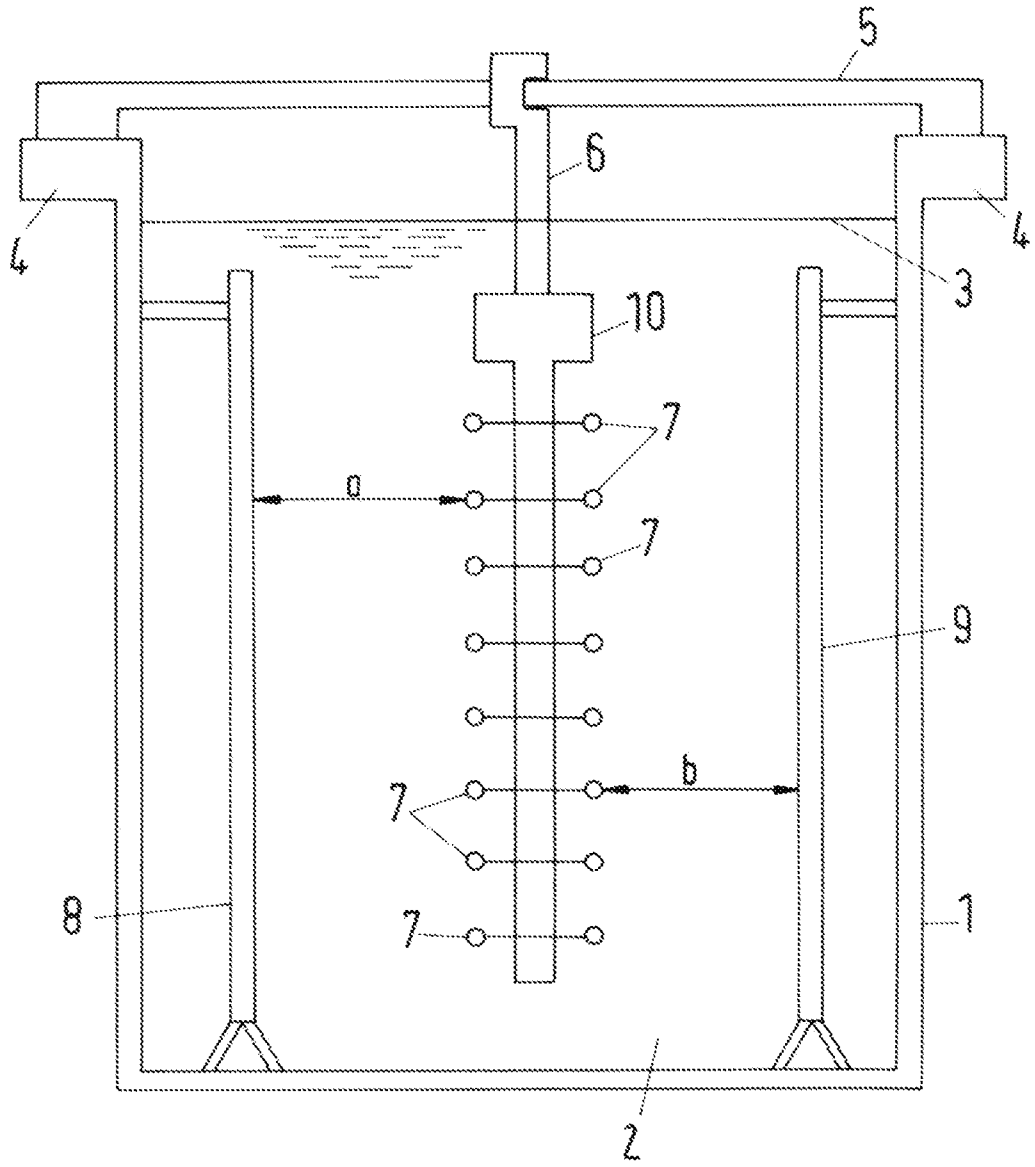

Fig.1

INTERNATIONAL SEARCH REPORT

International application No
PCT/EP2011/051757

A. CLASSIFICATION OF SUBJECT MATTER
INV. C23C18/16 C23C18/20 C23C18/30 C25D5/02 C25D5/20
C25D5/56 H05K3/18
ADD.
According to International Patent Classification (IPC) or to both national classification and IPC

B. FIELDS SEARCHED

Minimum documentation searched (classification system followed by classification symbols)
C23C C25D H05K

Documentation searched other than minimum documentation to the extent that such documents are included in the fields searched

Electronic data base consulted during the international search (name of data base and, where practical, search terms used)
EPO-Internal, WPI Data

C. DOCUMENTS CONSIDERED TO BE RELEVANT

Category*	Citation of document, with indication, where appropriate, of the relevant passages	Relevant to claim No.
Y	W. Eberhardt, M. Münch: "Verbundfestigkeit von Thermoplasten bei der zwei-Komponenten-MID-Technik für miniaturisierte Mikrosystemgehäuse", Hahn-Schickard-Gesellschaft, Institut für Feinwerk- und Zeitmesstechnik , 7 November 2001 (2001-11-07), XP002590284, Retrieved from the Internet: URL:http://www.imat.hsg-imit.de/fileadmin/hsg-imat/pdfs/aif12120.pdf [retrieved on 2010-06-30] page 50 - page 58 ----- -/--	1-12

[X] Further documents are listed in the continuation of Box C.

[X] See patent family annex.

* Special categories of cited documents :

"A" document defining the general state of the art which is not considered to be of particular relevance

"E" earlier document but published on or after the international filing date

"L" document which may throw doubts on priority claim(s) or which is cited to establish the publication date of another citation or other special reason (as specified)

"O" document referring to an oral disclosure, use, exhibition or other means

"P" document published prior to the international filing date but later than the priority date claimed

"T" later document published after the international filing date or priority date and not in conflict with the application but cited to understand the principle or theory underlying the invention

"X" document of particular relevance; the claimed invention cannot be considered novel or cannot be considered to involve an inventive step when the document is taken alone

"Y" document of particular relevance; the claimed invention cannot be considered to involve an inventive step when the document is combined with one or more other such documents, such combination being obvious to a person skilled in the art.

"&" document member of the same patent family

Date of the actual completion of the international search	Date of mailing of the international search report
24 June 2011	01/07/2011

Name and mailing address of the ISA/	Authorized officer
European Patent Office, P.B. 5818 Patentlaan 2 NL - 2280 HV Rijswijk Tel. (+31-70) 340-2040, Fax: (+31-70) 340-3016	Le Hervet, Morgan

INTERNATIONAL SEARCH REPORT

International application No
PCT/EP2011/051757

C(Continuation). DOCUMENTS CONSIDERED TO BE RELEVANT

Category*	Citation of document, with indication, where appropriate, of the relevant passages	Relevant to claim No.
Y	WO 2007/035091 A1 (TNO [NL]; TACKEN ROLAND ANTHONY [NL]; VERCAUTEREN FRANKY FLORY [NL]; R) 29 March 2007 (2007-03-29) page 1, line 27 - page 5, line 17 examples 1,2	1-12
A	GB 1 213 177 A (BURROUGHS CORP [US]) 18 November 1970 (1970-11-18) the whole document	1-12
A	NAGAO T ET AL: "CHALLENGE TO CHROMIUM-FREE PLASTIC PLATING METHOD CHALLENGE TO CHROMIUM-FREE PLASTIC PLATING METHOD", GALVANOTECHNIK, EUGEN G.LEUZE VERLAG, SAULGAU/WURTT, DE, vol. 97, no. 7, 1 September 2006 (2006-09-01), pages 2124-2130, XP001501422, ISSN: 0016-4232 the whole document	1-12
A	JP 6 212440 A (MITSUBISHI CHEM IND) 2 August 1994 (1994-08-02) abstract	1-12
A	DE 10 2007 015625 A1 (BIA KUNSTSTOFF UND GALVANOTECH [DE]) 2 October 2008 (2008-10-02) the whole document	1-12

INTERNATIONAL SEARCH REPORT

Information on patent family members

International application No
PCT/EP2011/051757

Patent document cited in search report	Publication date	Patent family member(s)	Publication date
WO 2007035091 A1	29-03-2007	AT 453737 T	15-01-2010
		CN 101273155 A	24-09-2008
		DK 1943372 T3	26-04-2010
		EP 1767663 A1	28-03-2007
		EP 1943372 A1	16-07-2008
		JP 2009509048 T	05-03-2009
		KR 20080060231 A	01-07-2008
		US 2010143727 A1	10-06-2010
GB 1213177 A	18-11-1970	BE 724134 A	02-05-1969
		CH 510130 A	15-07-1971
JP 6212440 A	02-08-1994	JP 3275476 B2	15-04-2002
DE 102007015625 A1	02-10-2008	NONE	