J. B. McMILLAN.

FENCE POST.

APPLICATION FILED FEB. 4, 1909.

930,782. Patented Aug. 10, 1909.

Fig. 1.

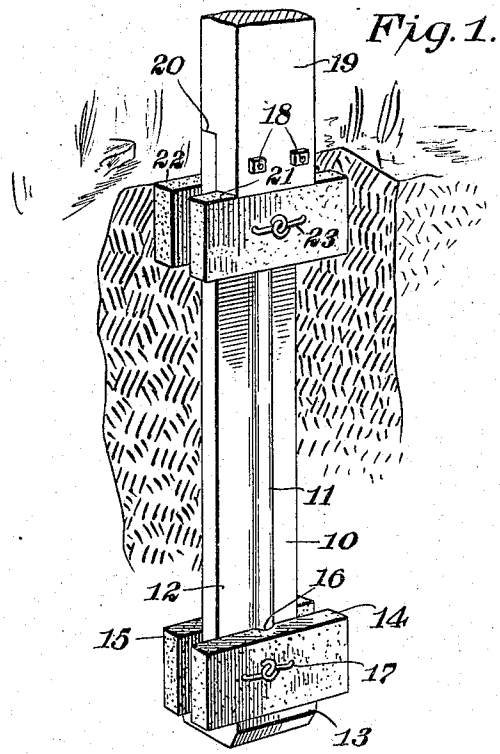

Fig. 2.

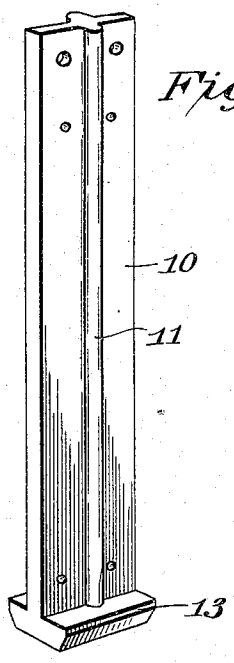

Fig. 3.

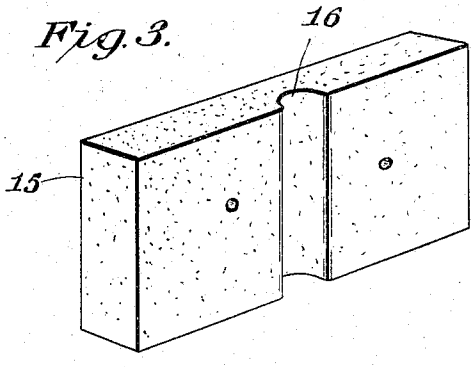

Inventor

J. B. McMillan,

Witnesses

Cora K. Handy

W. N. Woodson

By H. A. Blaney, Attorneys.

ANDREW. B. GRAHAM CO., PHOTO-LITHOGRAPHERS, WASHINGTON, D. C.

UNITED STATES PATENT OFFICE.

JAIRUS B. McMILLAN, OF NORTH VERNON, INDIANA.

FENCE-POST.

No. 930,782. Specification of Letters Patent. Patented Aug. 10, 1909.

Application filed February 4, 1909. Serial No. 476,034.

To all whom it may concern:

Be it known that I, JAIRUS B. McMILLAN, a citizen of the United States, residing at North Vernon, in the county of Jennings and State of Indiana, have invented certain new and useful Improvements in Fence-Posts, of which the following is a specification.

This invention relates to fences and has particular reference to a post to be employed in connection with the same.

The invention has for an object the provision of a post which will be strong and durable and one which may be rigidly supported in the ground and not be affected by frost or the like.

Another object of this invention is the provision of an improved post whereby the base or foot of the same may be permanently secured in the ground and the upper or wooden section of the post may be renewed from time to time as necessity requires it.

The invention has for a further object the provision of a post of this character which is light in weight and which comprises but few parts thereby producing a device of this nature which may be produced economically and which may be readily employed in the construction of fences.

For a full understanding of the invention reference is to be had to the following description and accompanying drawings, in which—

Figure 1 is a perspective view of the improved device disclosing the post broken away at its outer extremity. Fig. 2 is a detailed perspective view of the base detached. Fig. 3 is a perspective view of one of the anchoring blocks employed in connection with the device.

Corresponding and like parts are referred to in the following description and indicated in all the views of the drawings by the same reference characters.

Referring to the drawings, the numeral 10 designates the base of a post which comprises an elongated body which is formed from cast iron or other material and which is provided with longitudinal ribs 11 and 12 which are positioned upon the opposite sides of the base 10 intermediate of the edges thereof. The lower extremity of the base 10 is provided with an enlargement 13 which forms an anchor for the purpose of holding the base 10 within the ground and of preventing the movement of the same under the effects of frost or the like. The base 10 is provided at its lower extremity with blocks 14 and 15 which are formed preferably from plastic material and which are provided upon their inner opposite faces with transverse grooves 16 for the reception of the ribs 11 and 12 therethrough for the purpose of supporting the plastic blocks 14 and 15 in position. The blocks 14 and 15 are held in position preferably by means of a wire 17 which is engaged through the same and through the base 10 near the opposite edges thereof and which is secured at its opposite ends by twisting or tying the same in any convenient manner. The blocks 14 and 15 are formed of such dimensions that their extremities extend beyond the enlargement 13 and further the stability of the base 10.

The upper extremity of the base 10 is provided with apertures through which bolts 18 are passed for the purpose of carrying the lower extremity of a post 19. The post 19 is preferably formed from wood and is mortised at its lower extremity in one face thereof for the reception of the upper extremity of the base 10 to form a shoulder 20 for the purpose of supporting the weight of the post 19 and thereby relieving the bolts 18 from unnecessary strain. The inner face of the post 19 is grooved at its lower extremity for the reception of the rib 11 which is extended into the same. The base 10 is provided at its upper end adjacent the lower extremity of the post 19 with two blocks 21 and 22 which are formed of plastic material, corresponding in formation to the blocks 14 and 15 positioned upon the lower extremity of the post, and which are held in engagement upon the opposite sides of the base 10 by means of a wire 23. The blocks 21 and 22 engage the ground at the upper extremity of the base 10 and serve the purpose of preventing the vibration of the upper extremity of the base 10 and thereby form a rigid support for the base 10 and post 19.

In positioning the base the upper extremity of the base 10 is extended above the ground for the purpose of admitting the removal or positioning of the post 19 and it is thus seen that the post 19 may be renewed when it is necessary as when the same is broken and decayed. The base 10 being formed of cast iron or other material and being provided with plastic blocks for supporting the same will last a considerable time and

will not necessitate the removal of the same upon the breakage or decay of the post 19.

Having thus described the invention, what is claimed as new is:—

1. A device as specified comprising an elongated metallic base, ribs longitudinally disposed upon the opposite faces of said base, an enlargement formed upon the lower extremity of said base, plastic blocks disposed in pairs adjacent the opposite ends of said base against the opposite sides thereof and a post secured at its lower extremity to the upper end of said base.

2. A device as specified comprising an elongated base, ribs formed upon the opposite faces of said base, an anchor positioned upon the lower extremity of said base, blocks disposed in pairs upon the opposite extremities thereof and a post secured to the upper extremity of said base.

3. A device as specified comprising an elongated base, ribs disposed upon the opposite sides of said base, an anchor positioned upon the lower extremity of said base, blocks engaged upon the opposite sides of said base in the opposite ends thereof, said blocks having grooves formed in the inner faces for engagement with said ribs, and a post upwardly extended from said base.

4. A device as specified comprising an elongated base, ribs integrally formed upon the opposite sides of said base, an anchor integrally formed upon the lower end of said base, a post detachably carried by said base, a shoulder formed on said post at the lower end thereof for engagement with the upper end of said base, and grooved blocks clamped upon the opposite sides of said base in engagement with said ribs.

In testimony whereof I affix my signature in presence of two witnesses.

JAIRUS B. McMILLAN. [L. S.]

Witnesses:
CHARLES W. SPRIGGS,
ISAAC T. STEARNS.