Jan. 19, 1932. C. GILLINGS 1,841,725

TELEPHONE SYSTEM

Filed April 14, 1930 14 Sheets-Sheet 1

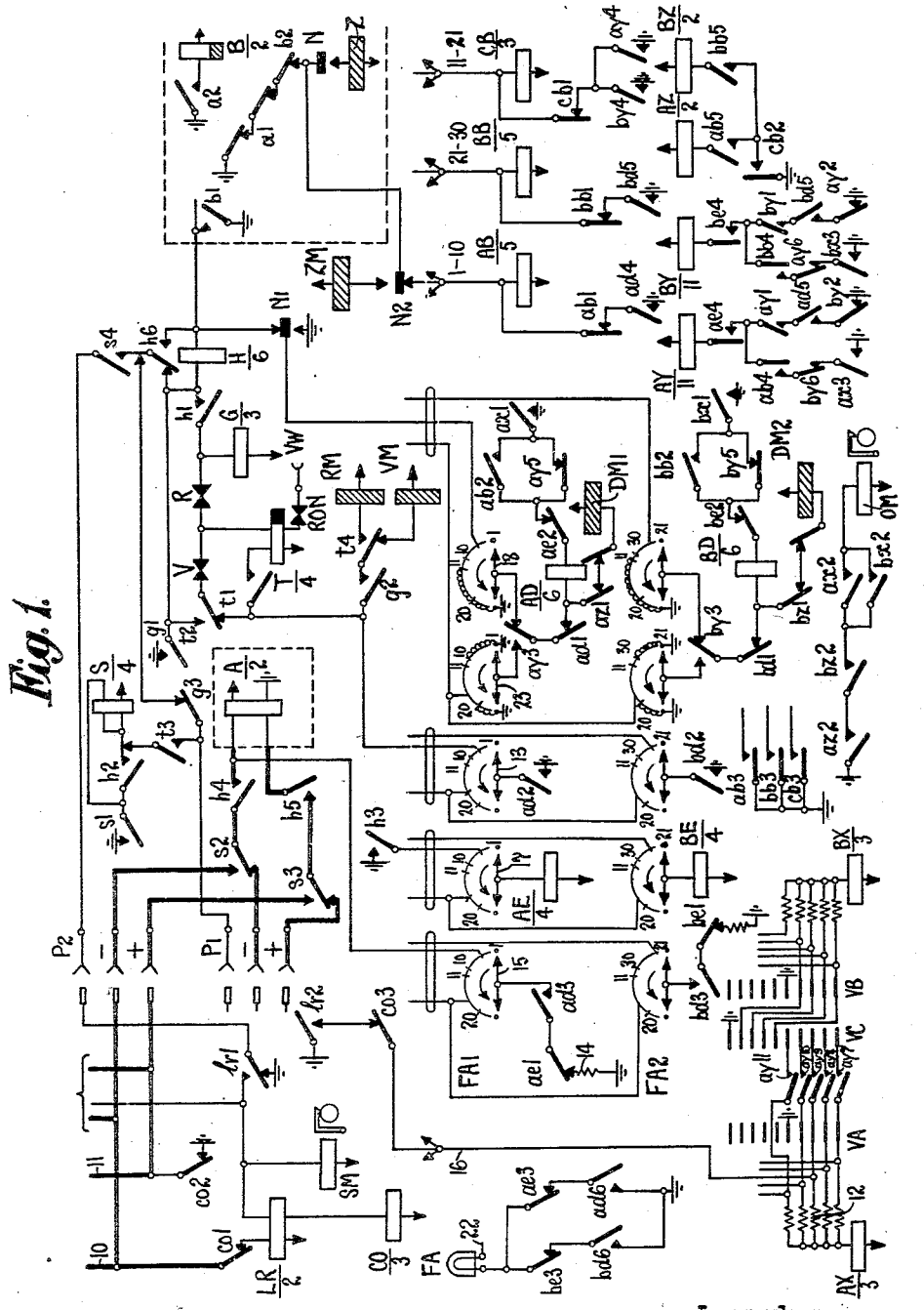

Fig. 1.

Inventor
Charles Gillings
Chas. M. Baudy. Atty.

Jan. 19, 1932. C. GILLINGS 1,841,725

TELEPHONE SYSTEM

Filed April 14, 1930 14 Sheets-Sheet 2

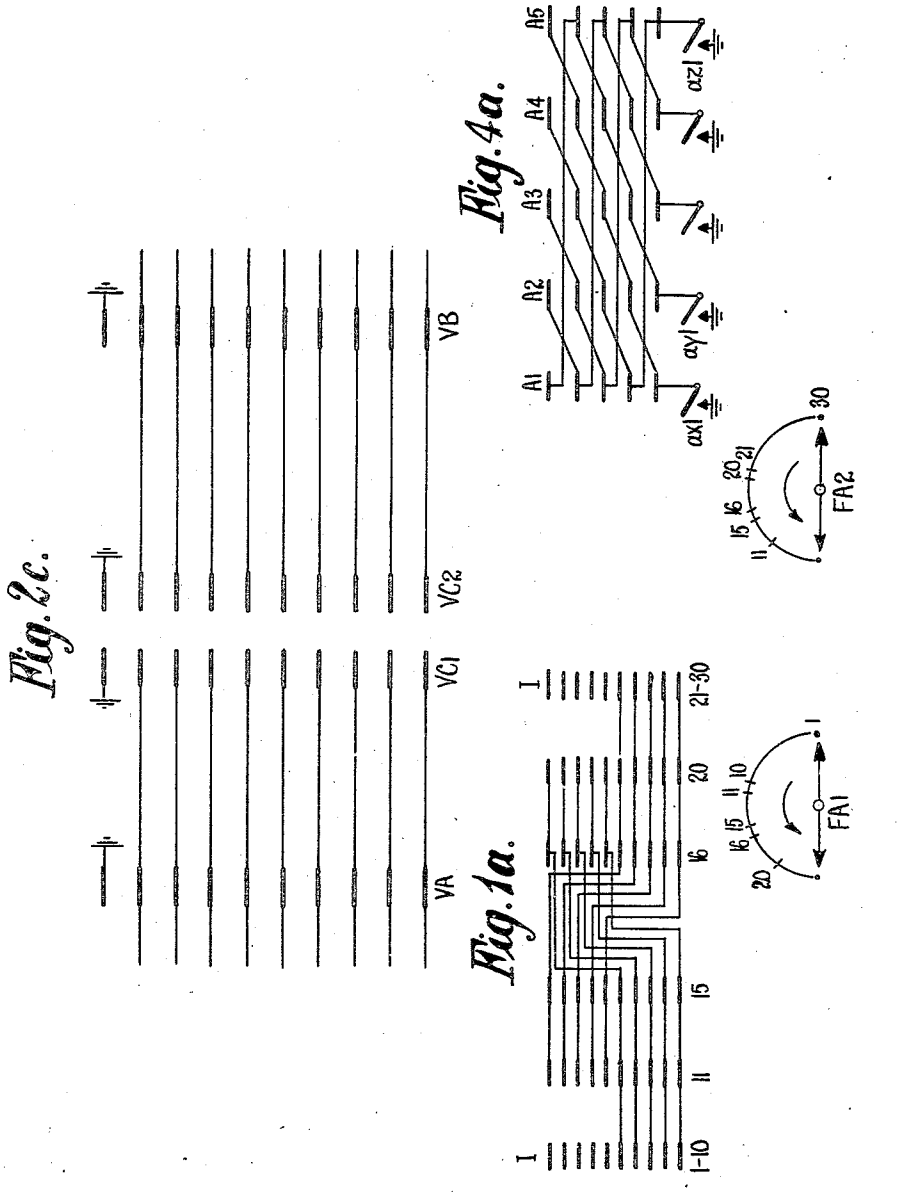

Inventor

Charles Gillings

Chas. M. Caudy Atty.

Jan. 19, 1932. C. GILLINGS 1,841,725

TELEPHONE SYSTEM

Filed April 14, 1930 14 Sheets-Sheet 3

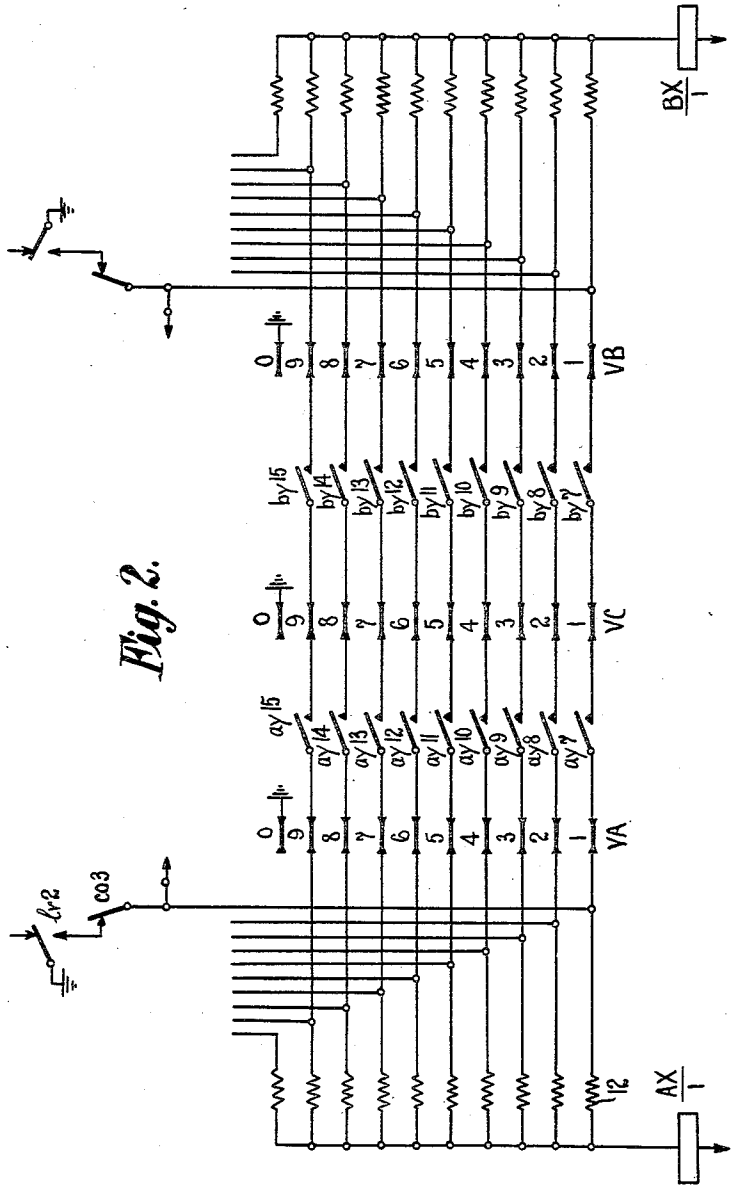

Fig. 2.

Inventor
Charles Gillings
Chas. M. Landy. Atty.

Jan. 19, 1932. C. GILLINGS 1,841,725

TELEPHONE SYSTEM

Filed April 14, 1930 14 Sheets-Sheet 4

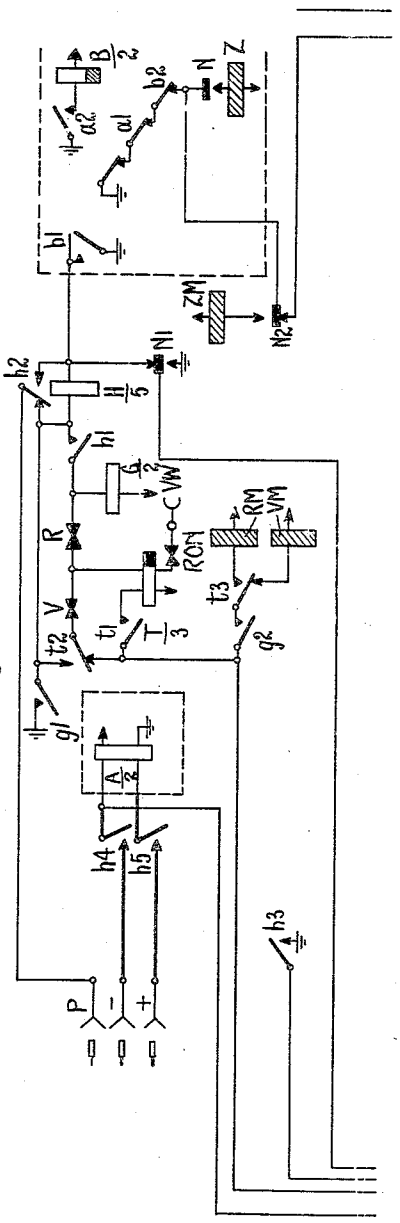

Fig. 2a.

Inventor
Charles Gillings
Chas. M. Candy. Atty.

Jan. 19, 1932. C. GILLINGS 1,841,725

TELEPHONE SYSTEM

Filed April 14, 1930 14 Sheets-Sheet 5

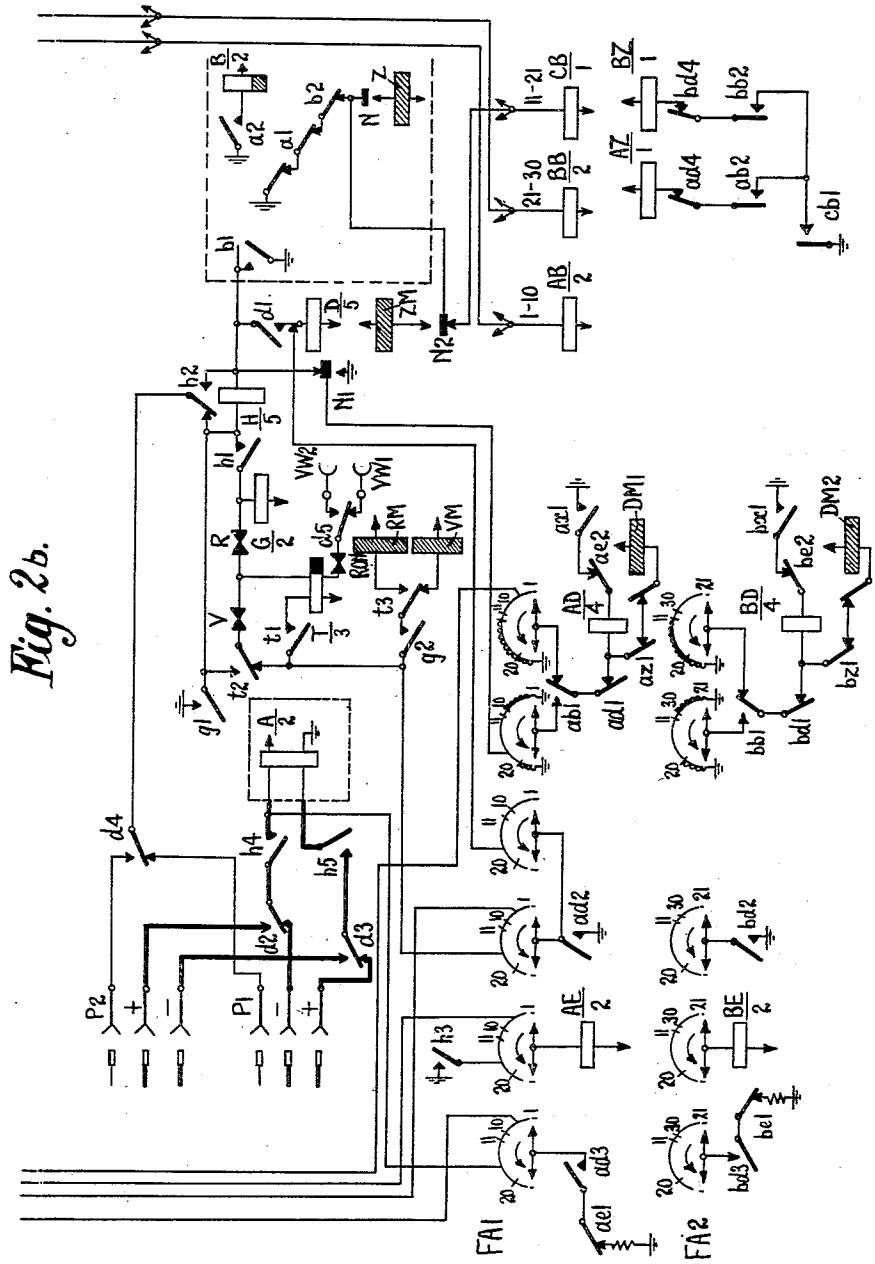

Fig. 2b.

Inventor
Charles Gillings
Chas. M. Cousins Atty.

Jan. 19, 1932. C. GILLINGS 1,841,725

TELEPHONE SYSTEM

Filed April 14, 1930 14 Sheets-Sheet 6

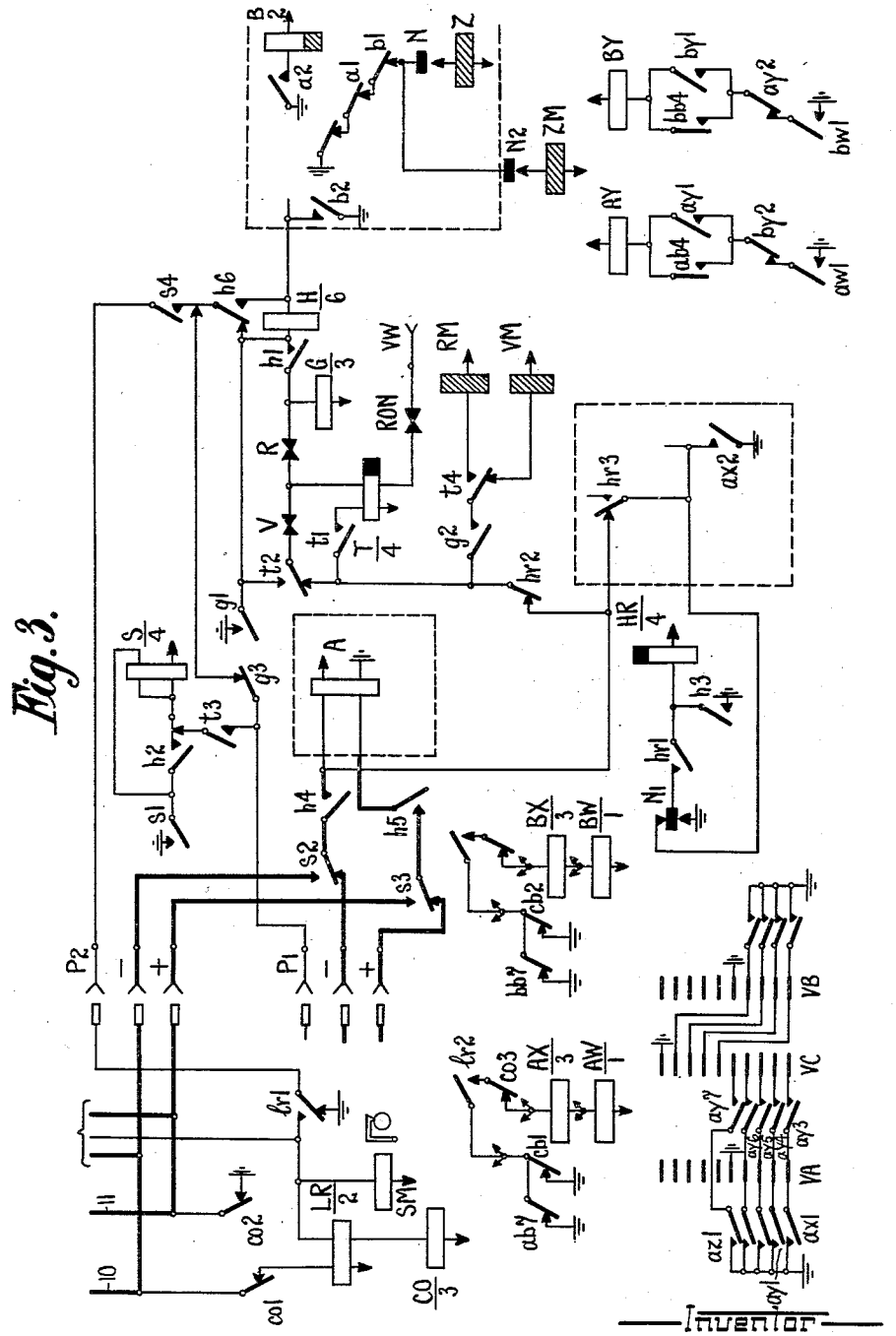

Fig. 3.

Inventor
Charles Gillings
Chas. M. Candy Atty.

Jan. 19, 1932. C. GILLINGS 1,841,725

TELEPHONE SYSTEM

Filed April 14, 1930 14 Sheets-Sheet 7

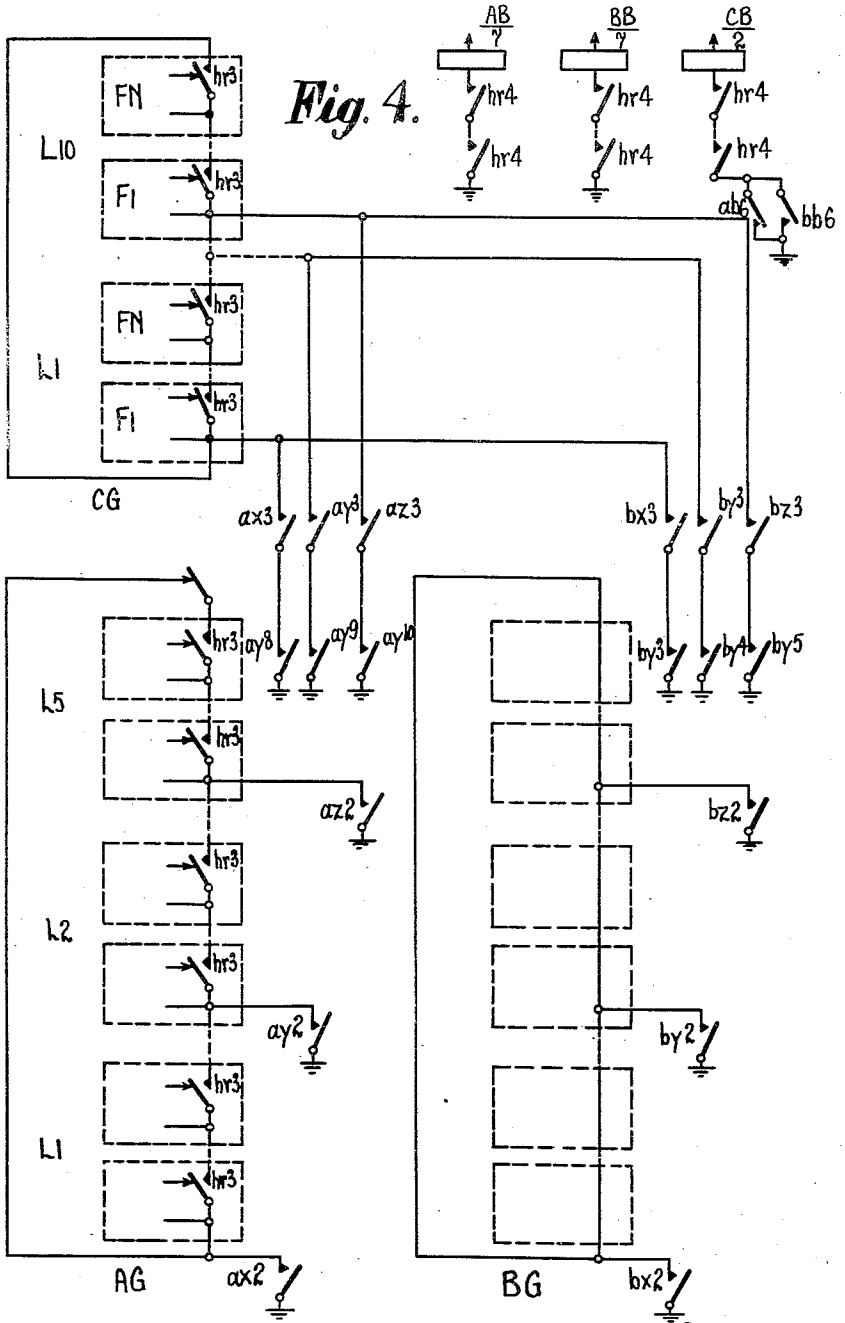

Fig. 4.

Inventor
Charles Gillings
Chas. M. Caudy Atty

Jan. 19, 1932. C. GILLINGS 1,841,725

TELEPHONE SYSTEM

Filed April 14, 1930 14 Sheets-Sheet 8

Fig. 5.

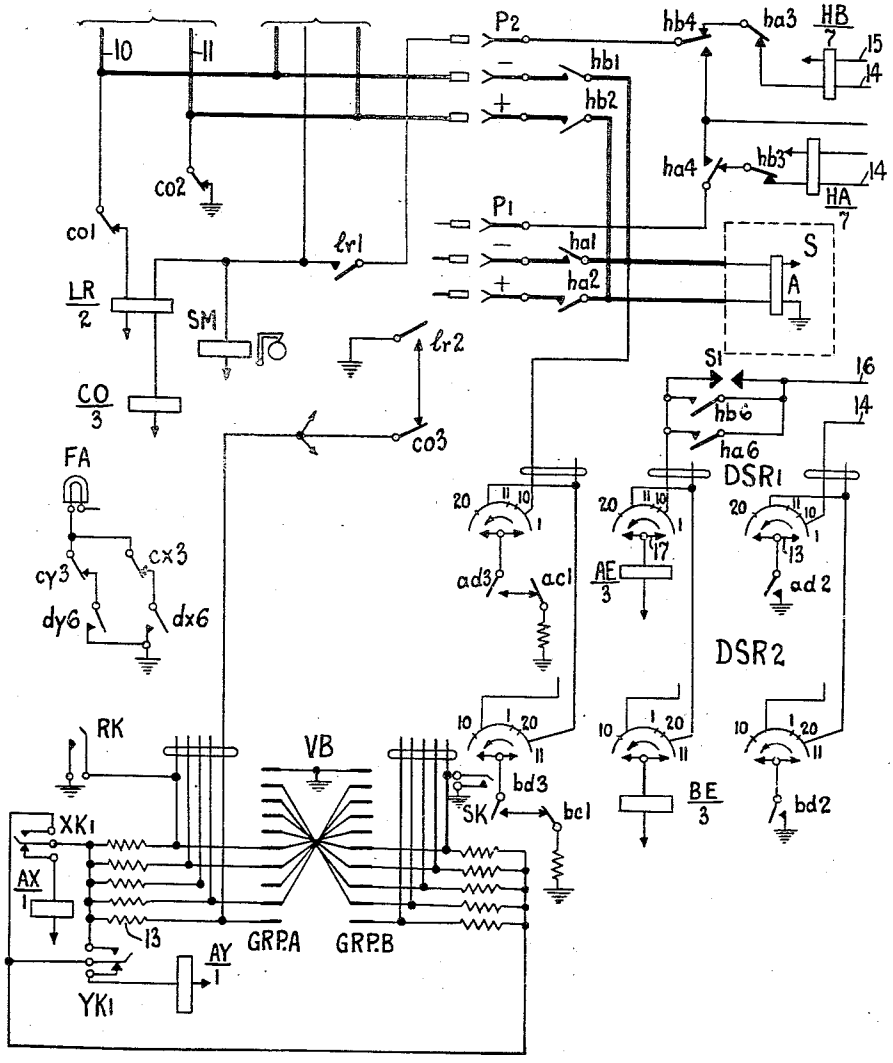

Inventor
Charles Gillings
Chas. M. Caudy Atty.

Jan. 19, 1932. C. GILLINGS 1,841,725

TELEPHONE SYSTEM

Filed April 14, 1930 14 Sheets-Sheet 9

Fig. 6.

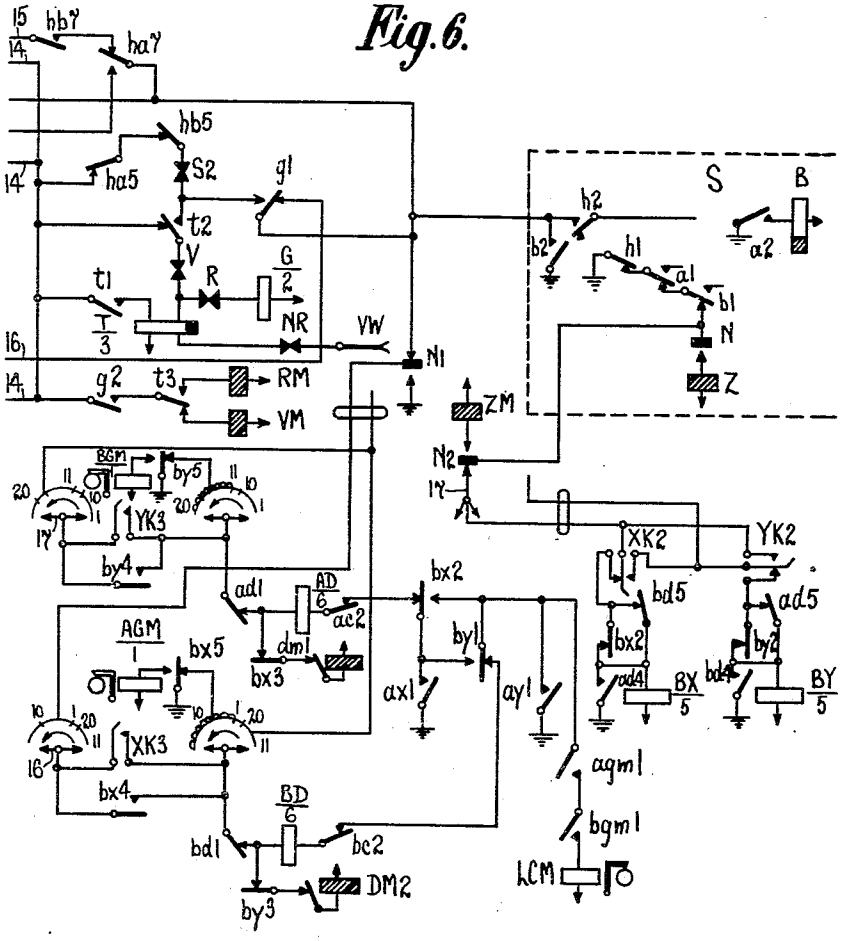

Inventor

Charles Gillings

Chas. M. Caudy Atty.

Jan. 19, 1932. C. GILLINGS 1,841,725

TELEPHONE SYSTEM

Filed April 14, 1930 14 Sheets-Sheet 10

Fig. 7.

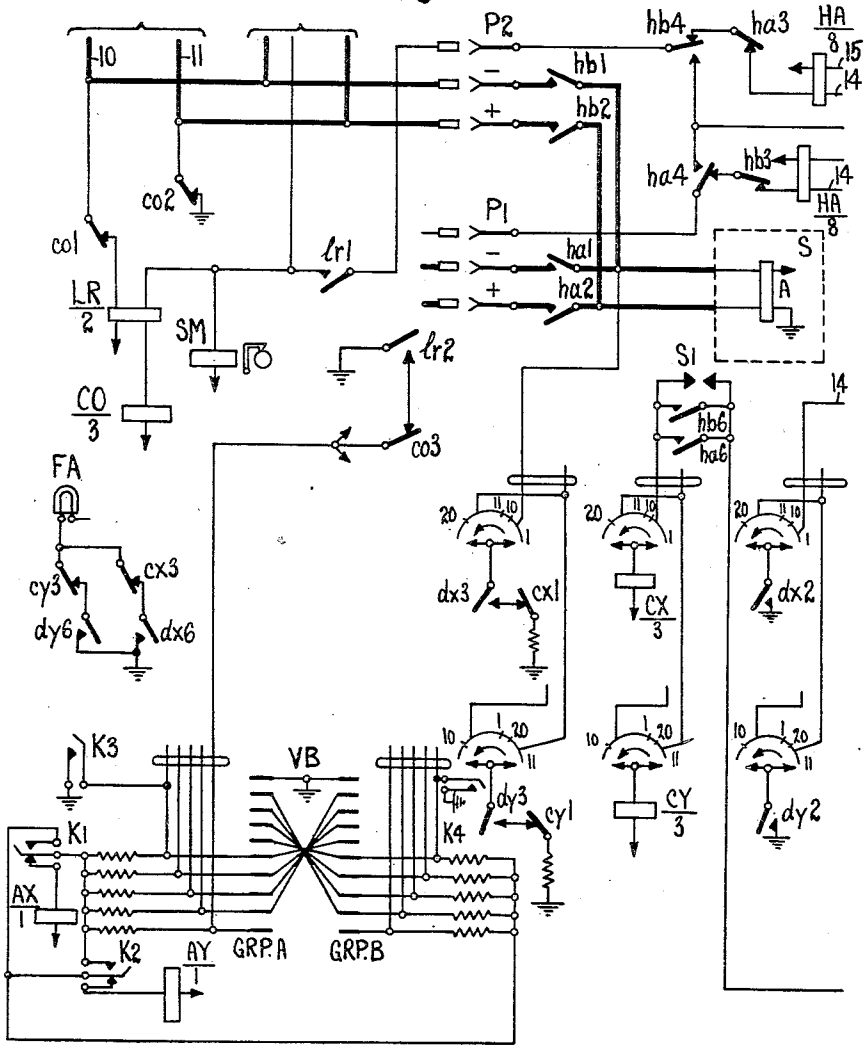

Inventor
Charles Gillings
Chas. M. Landy Atty.

Jan. 19, 1932. C. GILLINGS 1,841,725

TELEPHONE SYSTEM

Filed April 14, 1930 14 Sheets-Sheet 11

Fig. 8.

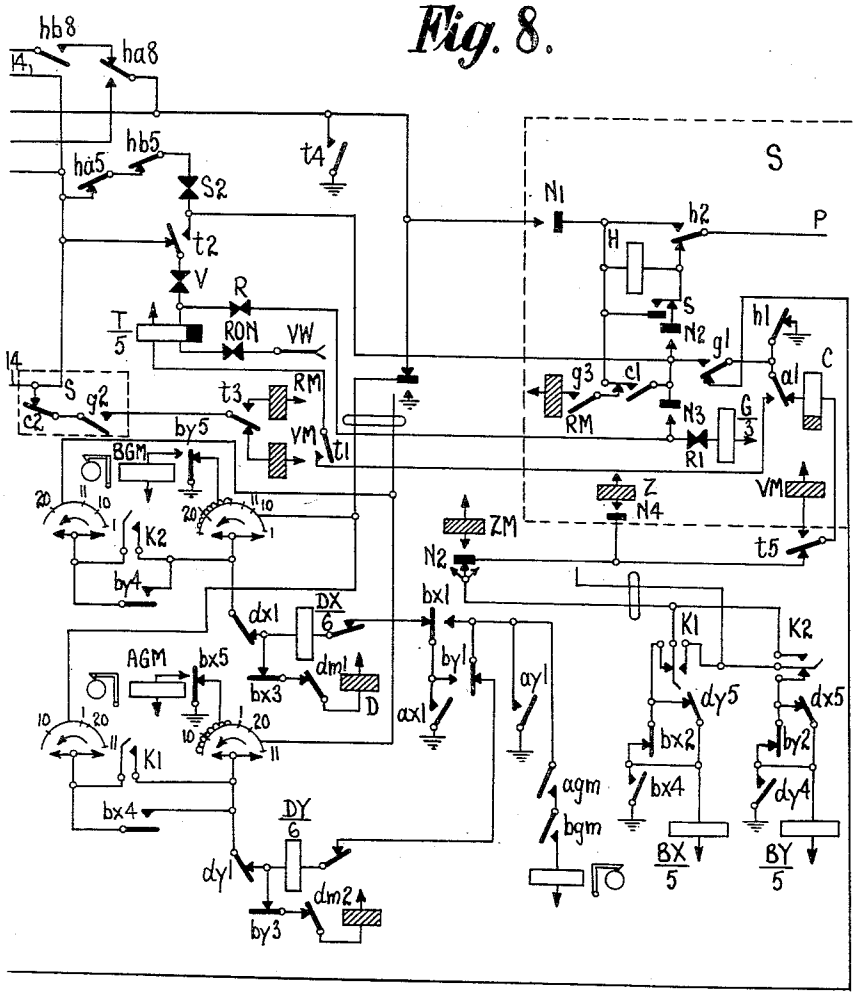

Inventor
Charles Gillings
Chas. M. Caudy Atty.

Jan. 19, 1932. C. GILLINGS 1,841,725

TELEPHONE SYSTEM

Filed April 14, 1930 14 Sheets-Sheet 12

Fig. 9.

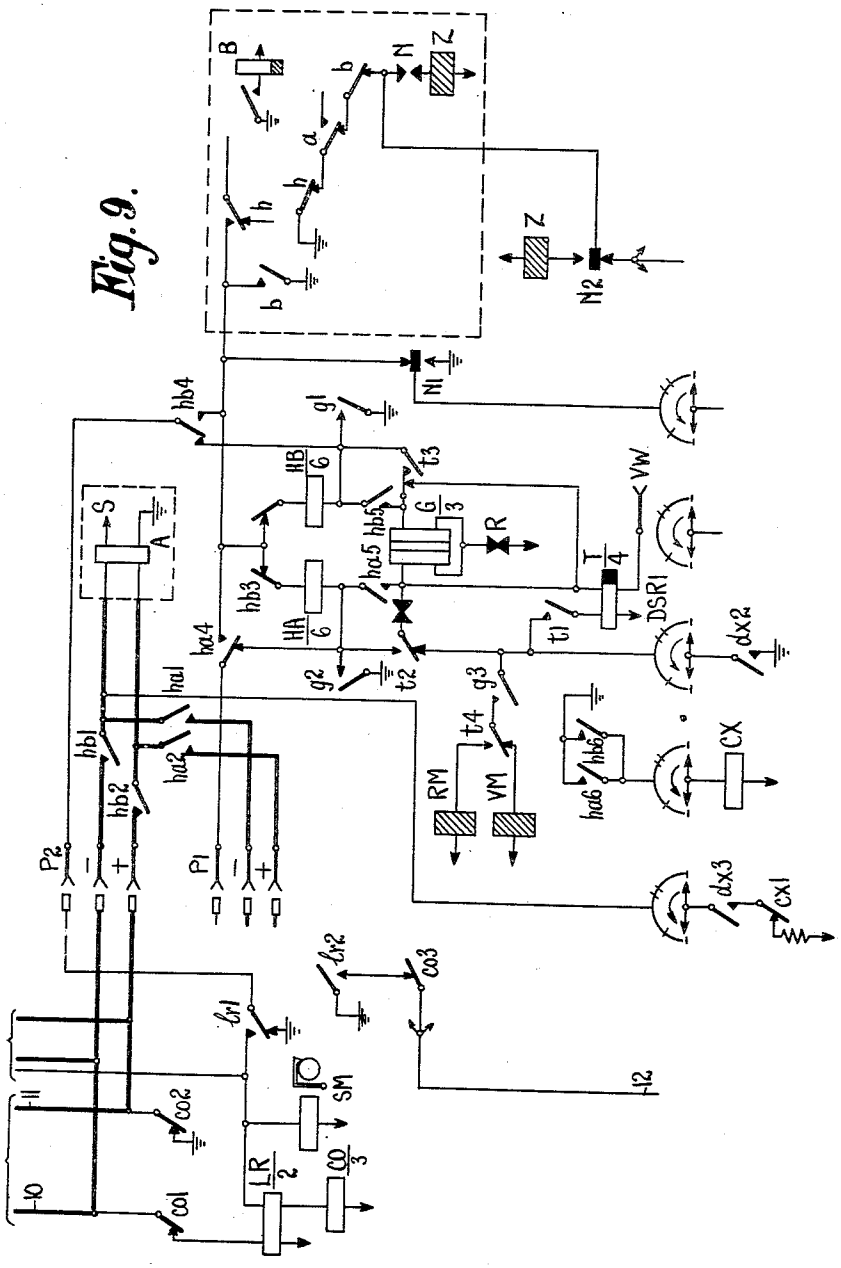

Inventor
Charles Gillings
Chas. M. Caudy Atty.

Jan. 19, 1932. C. GILLINGS 1,841,725

TELEPHONE SYSTEM

Filed April 14, 1930 14 Sheets-Sheet 13

Fig. 10.

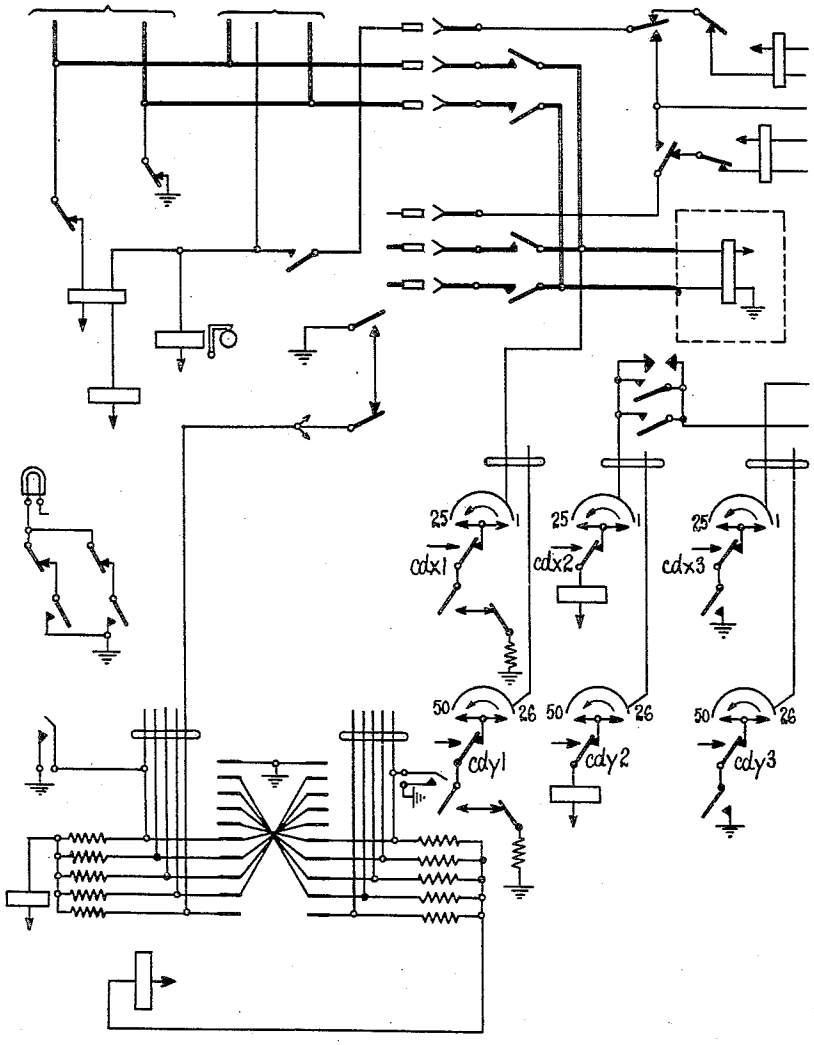

Inventor
Charles Gillings
Chas. M. Cundy Atty.

Jan. 19, 1932. C. GILLINGS 1,841,725

TELEPHONE SYSTEM

Filed April 14, 1930 14 Sheets-Sheet 14

Fig. 11.

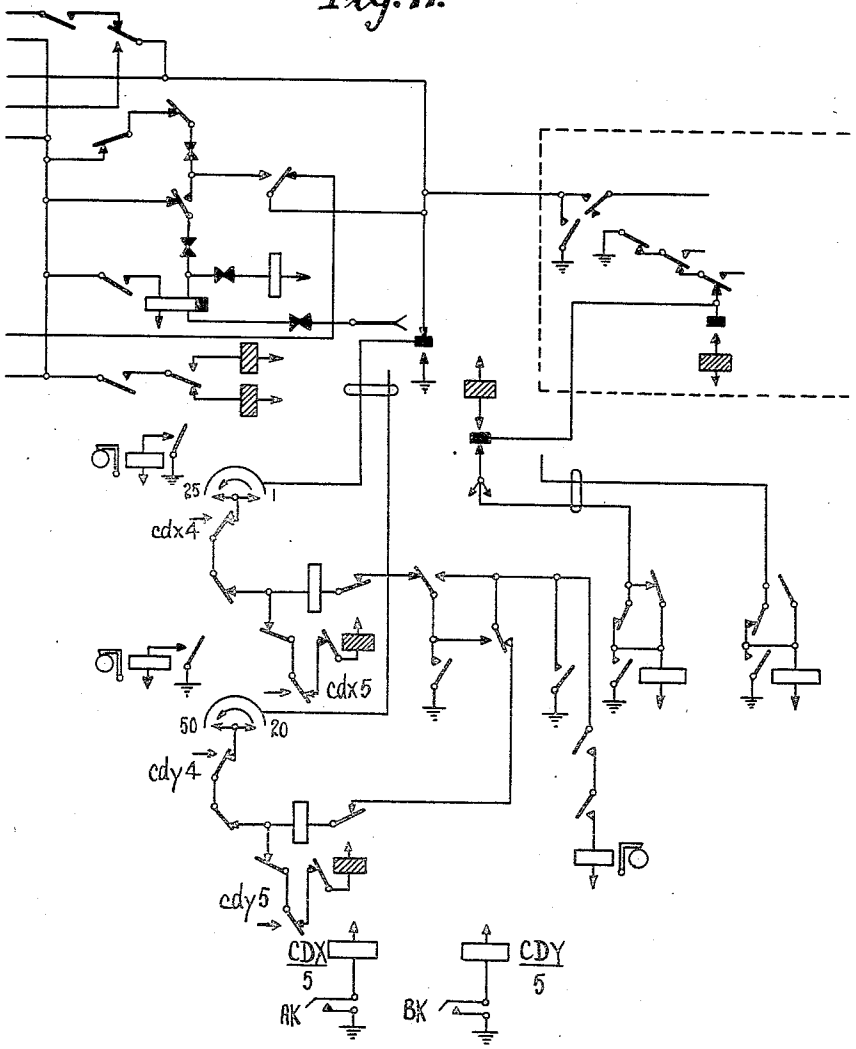

Inventor
Charles Gillings
Chas. M. Caudy Atty.

Patented Jan. 19, 1932 1,841,725

UNITED STATES PATENT OFFICE

CHARLES GILLINGS, OF LIVERPOOL, ENGLAND, ASSIGNOR TO ASSOCIATED TELEPHONE & TELEGRAPH COMPANY, OF CHICAGO, ILLINOIS, A CORPORATION OF ILLINOIS

TELEPHONE SYSTEM

Application filed April 14, 1930, Serial No. 443,972, and in Great Britain May 22, 1929.

The present invention relates to telephone systems and is more particularly concerned with telephone systems employing switches of the backwardly hunting type commonly known as finder switches. As is well known, the function performed by these switches is similar to that of switches of the forwardly hunting type commonly known as line switches, but the controlling arrangements must of course be different and the number of switches required will also be different. The most common use of both types of switch is for connecting a calling subscriber's line to an idle one of a group of first numerical switches accessible to all the subscribers of a group and for the sake of convenience the specification will refer to this particular use but it will be understood that similar arrangements apply wherever a connection is to be extended from a line to an idle one of a plurality of lines. Whilst a comparatively small number of finder switches are required to deal with the calls originating in a group of subscribers, line switches must be provided individual to each subscriber in the group so that a considerably larger number are required.

Line switches, however, are comparatively cheap and simple to manufacture and further the selector switches to which they have access can be arranged in comparatively large groups, for instance, groups of 25, so that the number of expensive selector switches required are reduced to a minimum. It will be realized, therefore, that if finder switches are to prove more economical than line switches when employed to extend calls from the same group of subscribers it is necessary that they should be of large capacity, although it is at the same time desirable that unduly long hunting time should be avoided. The number of lines which can be dealt with by a single level switch is limited by mechanical considerations and by the length of time required to move over all the bank contacts in succession and accordingly it may be desirable to make use of switches of the two-directional type whereby the switch wipers may be moved past groups of contacts in single short steps until the required group is reached.

It is usually desirable in telephone systems that the conditions determining the time taken for a calling line to be connected to a first selector shall be dependent only on the conditions existing at that time and shall not be dependent upon previous calls that have been set up from the calling line and in order to apply this principle it is necessary to employ switches of the homing type, that is to say, switches which return to a home position at the end of a call, in distinction to switches of the non-homing type, the wipers of which may stay on the contacts last used, or may move into engagement with the next idle switch. A possible objection to the use of large capacity homing finder switches is that the time taken to reach a line which is connected to contacts in an extreme position of the switch may be excessive, so that the subscribers will need to wait varying times before their line is extended to an idle first selector according to the position which their lines happen to occupy on the banks of the switches.

It is an object of the present invention to reduce the number of finder switches required whilst at the same time arranging that the time taken for a calling line to be extended to an idle first selector shall be small and substantially the same for all the subscribers. It will be realized, moreover, that the finder switch is usually linked to an expensive selector switch so that any reduction in the number of finder switches also provides a further economy by reducing the number of selector switches required. In order to carry out this object of the invention each group of finder switches serving each group of subscribers is divided into sub-groups. In order to reduce the time taken for a calling line to be extended to an idle first selector the banks of the sub-groups are differently wired, the bank wiring being arranged so that when a line is calling a finder switch is always started up in that sub-group of switches which will have the least number of steps to take to connect with the calling line. This is attained according to one feature of the invention by arranging

that in a telephone system employing a separate start relay associated with each sub-group of lines to which a finder switch has access a starting circuit is adapted to be extended by busy finder switches successively from one switch to another, the start relays being adapted to connect starting potential to different points in the said circuit so that different finder switches become first choice according to the starting relay which is operated.

In order to reduce the total number of finder switches required, finder switches of different capacity are employed, arranged in separate groups. According to another feature of the invention by which in a telephone system employing finder switches for establishing connections with lines over which calls are being set up, each of said lines is arranged to be accessible to finder switches of different capacity.

According to a further feature of the invention, in a telephone system employing finder switches for establishing connections with lines over which calls are being set up finder switches having different capacities are alloted to a group of lines the finder switches of smaller capacity being adapted to be taken into use in preference to the finder switches of larger capacity.

According to a still further feature of the invention in a telephone system employing finder switches for establishing connections with lines over which calls are being set up, said lines are divided into groups to which finder switches of one capacity have access and into sub-groups to which finder switches of a smaller capacity have access.

The invention will be better understood from a perusal of the following specification taken in conjunction with the accompanying drawings, comprising Figs. 1, 1A, 2, 2A, 2B, 2C, 3, 4, 4*a*, 5, 6, 7, 8, 9, 10 and 11 which illustrate various methods of carrying the invention into effect. It will be understood however, that these are given by way of example only, and that various modifications may be made by those skilled in the art without departing from the spirit of the invention. A general description of the switch layout and mechanical details will first be given in connection with Fig. 1. In this example, switches of the two-directional step-by-step type are employed; the operation of these switches as is well known is effected by the operation of a vertical magnet, indicated in Fig. 1, by the reference VM, which operates on each energization to raise the switch shaft carrying the switch wipers one step, thereby moving the switch wipers past successive levels of contacts until the required level is reached; and a rotary magnet indicated by the reference RM, which is then operated and on operation moves the wipers into engagement with the first set of contacts in the selected level, and is successively operated if necessary to move the wipers in a rotary direction until the wanted set of contacts is found. The release relay, indicated by the reference ZM is arranged on energization to release a detent from the switch shaft which thereupon restores to normal by re-tracing in the opposite direction its original motion. The switch is also provided with a vertical test wiper, shown in the drawing by reference VW near the rotary and vertical magnets, this wiper is arranged to engage with a separate bank of ten contacts placed vertically above one another, each contact corresponding to one level in the regular bank. These vertical banks are shown diagrammatically at the lower left-hand corner of the drawing under references VA, VC and VB.

Referring now to the upper portion of the Figure, the apparatus shown on the left-hand side is the calling subscriber's line circuit individual to his line, the apparatus shown in the centre is one of a group of finder switches serving the group of lines in which the calling subscriber is located and the apparatus on the right-hand side shows a first selector switch which is permanently linked to the finder switch shown, and is included in a dotted rectangle. Relay A shown in the dotted rectangle in the finder switch circuit also forms part of a selector circuit but for the sake of convenience is shown separated therefrom.

Referring now to the apparatus shown in the lower portion of the Figure, it will be understood that this is provided in common to the group of lines under consideration. The group of finder switches required to serve this group of lines is divided into three sub-groups, these being designated by the references A, B and C.

Reference will first be made to the finder allotters FA1 and FA2, each comprising a rotary line switch provided with five wipers adapted to be advanced step-by-step upon each de-energization of their respective driving magnets DM1 and DM2. These switches are provided with twenty-five contacts in each bank but in the present arrangement only the first twenty contacts are equipped. For the sake of example, the A group of finders is given as comprising finders 1—10, the B group as comprising finders 21—30, and the C group as comprising finders 11—20. It should now be mentioned that the C group of finders is only taken into use either when all the finders in the A group are busy or when all the finders in the B group are busy. For, referring to the finder allotter FA1 it will be noticed that wiper 18 extends connection from earth at off-normal contacts similar to N1 of busy finders to the driving magnet DM1 and the driving magnet DM1 will thereupon intermittently operate until wiper 18 engages with an idle find-

er; whereas the contacts corresponding to finders 11—20 are permanently connected to earth to cause the switch to step past these contacts and into engagement with the first idle finder of the A group. A similar circuit is provided to magnet DM2 of the finder FA2 for preselecting an idle finder in the B group and for stepping past contacts allotted to the finders in the C group.

Two hundred subscribers are placed in each group and each group is divided into ten sub-groups of twenty subscribers each. The finders in the A and B groups have access to 100 lines each and finders in the C group have access to 200 lines each. The same circuit arrangements are provided for all the finders but the connections to the bank contacts of the finders in each sub-group are arranged differently. The bank contacts of the finders in the A group are connected to five sub-groups of lines, the bank contacts of the finders in the B group are connected to the other five sub-groups of lines and the bank contacts of the finders in the C group are connected to all the sub-groups of lines.

A brief description will now be given of the C group. The finders in the C group are provided with two line banks of 200 contacts which are arranged in ten levels of ten double contacts each; two wipers being allotted to each bank and are arranged to make contact simultaneously each with a corresponding one of a double contact. The test bank similarly consists of 200 points arranged in ten levels of ten double contacts each and two test wipers are provided shown in the drawing by P1 and P2, arranged so as to engage simultaneously each with a corresponding one of a double test contact. It will be seen that these finders have access to all the lines in the group, access being had to one hundred over one set of wipers and to the other hundred over the other set of wipers.

As will be shown later, the operation of a finder switch is initiated by earth connected to a common start lead similar to lead 16 shown connected to level 3 of the vertical bank of the finders of the C group.

When a call is initiated earth is connected to that contact of the vertical bank which corresponds to the level to which the calling subscriber's line is connected. At the same time, the operation of the start relay AX is effected for setting in operation the finder which is to connect with the calling line. Interaction then takes place between magnet RM and relay G of the hunting finder until wiper VK encounters earth on the marked contact of the vertical bank. When this level is reached relay T operates to disconnect the vertical magnet and connect up the rotary magnet whereupon inter-action takes place between relay G and magnet RM to rotate the wipers over the selected level. Simultaneous hunting then takes place over wipers P1 and P2 until the calling line is found.

The operation of a finder in the C group in this manner, however, only takes place under conditions of heavy traffic and in general, use will be of a finder in the A group or in the B group according as to whether the calling line is located in sub-groups 1—5 or in sub-groups 6—10. In the case of the finders in the A and B groups two sets of wipers are employed in the same manner as in the C group but since only five levels are required it is possible to dispense with one line bank and to arrange for both sets of line wipers to engage with the other line bank, the wipers then being arranged five steps apart. In the case of the A group of finders, one set of wipers is arranged to engage with ten lines in each of the sub-groups 1—5 and the other set of wipers is arranged to connect with the other ten lines in those sub-groups. In the same way, the line wipers in the B group of finders are arranged to have access in a single bank to calling lines in sub-groups 6—10. This arrangement is for the sake of economy, although if it is desirable to use the same switch mechanism and bank arrangements for all the finder switches this may readily be done by leaving the upper five levels in each bank unequipped. It will be noticed that earth is shown directly connected to the fifth vertical bank contact of groups A and B, and to the tenth vertical bank contact of group C. This is provided so that in the case of a false call being initiated due to a fault then the finder set in operation will not be operated past these levels.

Referring now to the bottom right-hand corner of Fig. 1, relay AB is provided in common to finders of the A group, and is normally energized as long as an idle finder is available in this group. Similarly relay BB common to finders of the B group and relay CB common to finders of the C group are also normally energized. In order that the circuits including armatures of these relays may be more readily understood these armatures have been placed either in a vertical position or in a horizontal position in the drawing in order to distinguish them from the armatures of other relays, these latter being shown in a slanting position.

When all the finders in the A group become busy, relay AB releases and causes relay AY to operate, thereby at armature *ay*3 causing the finder allotter FA1 to select an idle finder in the C group. In a similar manner when all the finders in the B group become busy, relay BY4 is operated to cause the finder allotter FA2 to select an idle finder in the C group. By referring to the cross connection of the vertical bank contacts between the C group and A and B groups shown at the bottom left-hand corner of Fig. 1 or in the more complete form in Fig. 1A it will be

seen that under normal conditions a maximum of five vertical steps is necessary to reach the required level, and that 6—10 steps are only required if a finder in a common group is taken into use.

In the arrangements shown in Fig. 1*a* the finders in the common group are further subdivided into two groups and the connections to the allotters FA1 and FA2 are arranged so that if the calling line is in sub-groups 1—5 and all the finders in the A group are busy the finders in the common group that will generally first be taken into use will also only have to be operated to a maximum of five vertical steps, and only, therefore, when the finder allotter selects finders 16–20 will it be necessary for more than five vertical steps to be taken. Similar arrangements are also made for the interworking of the B and C groups.

Referring now to Fig. 2, the circuit arrangements of the finders may be similar to those shown in Fig. 1, but the vertical bank contacts are not provided with the reversal connections shown in Figs. 1 and 1A, that is to say, no arrangements are provided for reducing the time required for a finder to establish connection with the lines of subscribers in sub-groups 6—10. The finders in the A and B groups each have access to 100 lines but in this case only one set of wipers is provided and one line bank of 10 levels.

The finders in the A group may be considered as having access to subscribers having an odd hundred digit and finders in the B group as having access to subscribers having an even hundreds digit. The finders in the C group have access to 200 lines and are provided with two sets of wipers over which simultaneous hunting takes place. If all the finders in the A group become busy, relay OA is operated to extend the starting connection through to the vertical bank of the common group, and similarly if all the finders in the B group become busy, relay EB is operated to extend the starting connection through in a similar manner.

A further modification employing similar arrangements is to provide the finders of the common group with two vertical test wipers and to arrange the operation of the all-finders-busy relay of the A group or the B group to cause the selection of one set of wipers of the finder of the common group taken into use so that simultaneous hunting is not then necessary. The arrangement of the vertical banks is then as shown in Fig. 2C, the circuits of the finders in the A and B groups are as shown in Fig. 2*a* and the circuits of the finders in the C group are as shown in Fig. 2*b*. The finders in the A and B groups have access to 100 lines, and are provided with only one set of wipers. The circuit arrangement of these finders is similar to that shown in Fig. 1, but has been slightly modified as shown in Fig. 2*b*, by dispensing with the relay S which is arranged to change over connections from one set of wipers to the other. The arrangement of the finder allotters is similar to that already described and these are shown in Fig. 2*b*, but in order to avoid complicating the drawings the connections to the banks of the finder allotter FA2 have been omitted.

The finders employed in the common group have access to 200 lines and are fitted with two sets of wipers. The circuit arrangement again is similar to that shown in Fig. 1, but has been modified as shown in Fig. 2*b* by arranging that when a finder is taken into use by a calling subscriber normally served by a finder in the A group, that is to say, when the finder is taken into use over the wipers of the finder allotter FA1, the discriminating relay D is operated before hunting takes place and remains locked operated while the finder is in use. The operation of this relay connects up the set of wipers including wiper P2 and in addition changes over the circuit of the right-hand winding of relay T from vertical wiper VW1 to vertical wiper VW2. If, however, the finder in the common group is taken into use by a calling subscriber normally served by a finder in the B group, that is to say, when the finder is taken into use over the wipers of the finder allotter FA2, earth is not connected forward to operate relay D and hence wiper VW1 and wiper P1 with its associated line wipers will be employed.

Referring now to Figs. 3 and 4, these show a finder system employing finders similar to those employed in the system shown in Fig. 1, but arranged with relay distribution, that is to say, relays are provided to take the place of the rotary line switch finders allotters FA1 and FA2. The circuit shown in Fig. 3 is similar to that shown in Fig. 1, with the exception of the provision of relay HR and the circuit shown in the lower portion of the figure in the dotted rectangle, which corresponds to Fig. 4. Instead of providing a start relay common to sub-groups 1—5 and a start relay common to sub-groups 6—10 a separate start relay is provided for each sub-group. The finders in the A and B groups are divided into five sub-groups and the finders in the C group are divided into ten sub-groups; the finders in each sub-group are normally operated to connect with calling lines terminating in their first level.

Referring to Fig. 4, the A group of finders AG is shown diagrammatically divided into five sub-groups L1, L2, L3, L4 and L5, and the finders in each sub-group are numbered from F1 to FN. It will be seen from Fig. 3 that if the calling subscriber is located in level 1 of the A group, relay AX will be operated and at armature *ax*1 will mark the first vertical bank contact and at armature *ax*2 will extend earth to armature *hr*3 of the

first finder in the first sub-group. This finder will then be operated one step vertically to select the wanted line.

If all the finders in the first sub-group are busy, the earth connection will be extended to the first idle finder in the second sub-group. The bank multiplying to the finders in this group is arranged so that only one vertical step is necessary to connect with subscribers in the second sub-group but two vertical steps are necessary to connect with subscribers in the first sub-group. If, however, all the finders in this sub-group are busy, the earth connection will be extended to the third sub-group and if an idle finder is available it will take three vertical steps to connect with the calling level. Similarly, if successive sub-groups are busy, the successive finders available in the sub-groups will take further vertical steps to select the calling level.

In the majority of cases, however, a finder will be available in the first sub-group and only one step will be necessary, the general principle of operation being that the large number of steps are only necessary under exceptional circumstances, the number of steps becoming progressively larger as the probability that the corresponding switch will be taken into use becomes less.

As already mentioned, if the finder set in operation is in the sub-group corresponding to the sub-group in which the calling subscriber is located, only one vertical step will be necessary. This may be further illustrated by relating to the operation of relay AZ, which takes place when a subscriber in the fifth sub-group is calling; under conditions of light traffic a finder in sub-group L5 will then be operated and as the line bank contacts corresponding to the fifth vertical bank contact are multiplied to the first level in the banks of finders in group L5 only one vertical step is necessary. Similar arrangements are also made in the R and C groups. If all the finders in group A become busy relay AB will be operated and will extend the starting circuits, to the common group of finders. Similarly, if all the finders in the B group become busy, relay BB will be operated and will extend the starting circuits to the common group of finders.

Referring now to Figs. 5 and 6, these show a modification of the circuits of the finders arranged so that the finders instead of hunting in a rotary direction for the absence of earth potential, will hunt until battery potential is encountered on the private contact of the calling line. The arrangement of the finder allotters and vertical bank contacts is also somewhat different from that shown in Fig. 1, but it will be understood that the arrangement of the finder allotters and vertical bank contacts shown in Fig. 1 may be used in this case also.

Referring now to Figs. 7 and 8, these show a modification of Figs. 5 and 6, the number of relays necessary having been reduced by combining the stepping relays of the selector and the finder and by arranging that the relay which operates when the calling level is reached also acts as a guard relay for the selector. For the sake of convenience, the finder allotters and vertical bank connections are identical with that shown in Figs. 5 and 6, but it will be understood that the circuits of the finder selector link may be used with any other kind of allotting arrangements.

Referring now to Fig. 9, this shows a finder having access to 200 lines and arranged to hunt simultaneously in two levels in which a shunt field relay is employed as a stepping relay in conjunction with two switching relays.

Referring now in Figs. 10 and 11, this shows an arrangement for use under exceptionally heavy traffic conditions where it may be necessary to provide up to 50 finders to deal with the traffic from a group of 200 subscribers. It will be realized that this example represents the limit of that shown in Fig. 1, for by increasing the number of finders it becomes necessary to reduce the number of finders in the common group if use is still to be made of 25-point allotting switches and in the limit shown in Figs. 10 and 11 the number of finders in the common group is reduced to zero. If all the finders accessible to either finder allotter should become busy, finders in the other group are taken into use and if either of the finder allotters develops a fault the attendant by the operation of a key is able to switch in an auxiliary finder allotter.

Having now given a general description of a layout of the switches, and their operation, a detailed description of the operation of the circuits will now be given.

Referring now to Fig. 1, it will be assumed that conductors 10 and 11 terminate at the substation of a subscriber in sub-group 3 and also terminate at the third set of bank contacts in the third level accessible to the upper set of wipers. When the subscriber initiates a call by removing his receiver from the switch hook, a loop is completed across conductors 10 and 11, thereby completing circuit for the left-hand winding of relay LR as follows: battery, left-hand winding of relay LR, armature *co*1, conductor 10, through a loop circuit at the calling subscriber's substation, conductor 11, armature *co*2, to earth.

Relay LR thereupon operates, at armature *lr*1 disconnects earth from the private bank contact terminating a line of the calling subscriber in order to mark this contact as that of the calling line and at armature *lr*2 connects earth to the start lead 16, which is common to all the twenty subscribers in sub-group 3. A circuit is thereby completed for relay

AX through resistance 12 and relay AX thereupon operates. At the same time, direct earth is connected to the third vertical bank contact of the finders in the A group, and the finders is the C group.

As the resistance 12 is comparatively high in value the earth potential connected through two of these resistances in series to the other vertical bank contact is insufficient to mark these bank contacts to indicate that the calling subscriber is located in the corresponding sub-group. Upon the operation of relay AX a circuit is completed for relay AD as follows: earth, armature *ax*1, armature *ae*2, winding of relay AD, armature *ay*1, interrupter springs of driving magnet DM1, winding of driving magnet DM1 to battery. Magnet DM1 does not energize in this circuit, owing to the relatively high resistance of relay AD, but relay AD operates and at armature *ad*2 connects up earth to start the operation of a finder. At armature *ax*2, relay AX closes a point in the circuit of the overflow meter OM, which is employed to indicate the number of calls initiated during periods when all the finders are busy.

It will be assumed first of all that the wipers of the finder allotter FA1 are resting in engagement with bank contacts corresponding to a free finder in the A group, and that this is the finder shown in the upper portion of Fig. 1. At armature *ad*3 a circuit is completed for the upper winding of relay A as follows: earth, resistance 14, armature *ae*1, armature *ad*3, wiper 15 and the contact on which it is resting, upper winding of relay A to battery. Relay A operates, at armature *a*1 opens a point in the circuit of the release magnet ZM and at armature *a*2 completes a circuit for relay B which in turn operates, at armature *b*1 connects earth to the release trunk conductor and at armature *b*2 opens a further point in the circuit of the release magnet ZM. Earth at armature *b*1 also extends over the normally closed off-normal springs N1 and the bank contact engaged by wipers thereby closing a point in the circuit of magnet DM1, this circuit, however, is maintained open at armature *ad*1. At armature *ad*2 earth is extended over wiper 13 and the bank contact on which it is resting, back contact of armature *t*2 and said armature, interrupter springs V controlled by the vertical magnet VM, interrupter springs R controlled by the rotary magnet RM, winding of stepping relay G to battery. Relay G operates in this circuit and at armature *g*2 completes a circuit for vertical magnet VM as follows: earth, armature *ad*2, wiper 13 and the bank contact on which it is resting, armature *g*2, armature *t*4 and its back contact, winding of vertical magnet VM to battery. Vertical magnet VM thereupon energizes and upon energizing raises the switch shaft and wipers one vertical step, thereby bringing the vertical wiper VW into engagement with first vertical bank contact.

The off-normal springs N1 and N2 are operated, when the switch shaft moves off-normal; at springs N1 earth is maintained connected to the corresponding bank contact of the finder allotter FA1 to mark the finder busy whilst at springs N2 an earth connection is disconnected from the common lead to relay AB and a point is closed in the circuit of the release magnet ZM. Since it has been assumed that the third vertical bank contact has been marked by the connection of earth thereto, the potential encountered on the first vertical bank contact by wiper VW will be insufficient to cause any operation to take place in the finder. Shortly after wiper VW has been moved into engagement with the first vertical bank contact the interrupter springs V are opened thereby opening the circuit of relay G, which thereupon de-energizes and at armature *g*2 opens the circuit of the vertical magnet VM. Magnet VM thereupon de-energizes and allows the interrupter springs V to open.

The circuit previously traced for relay G is then again completed, relay G again operates to close the circuit of the vertical magnet VM, which thereupon operates to step the vertical wiper VW into engagement with the second vertical bank contact. Since, however, direct earth is not encountered, the operation of the finder continues as before, and the vertical magnet is again energized to step the vertical wiper into engagement with the third vertical bank contact, where it encounters direct earth which short-circuits the right-hand winding of relay T. Shortly after the vertical wiper VW has stepped into engagement with the third vertical bank contact, the interrupter springs V are opened and the following circuit becomes effective: earth, armature *lr*2, armature *co*3, conductor 16, third vertical bank contact, vertical wiper VW, rotary off-normal springs RON, right-hand winding of relay T, rotary interrupter springs R, winding of relay G to battery. Relay G is maintained operated in this circuit whilst relay T operates and at armature *t*1 completes a locking circuit for itself over its left-hand winding to earth at armature *ad*2. At armature *t*4, relay T opens the circuit of the vertical magnet VM and completes an operating circuit for the rotary magnet RM as follows: earth, armature *ad*2, wiper 13 and bank contact on which it is resting, armature *g*2, armature *t*4 and its front contact, winding of magnet RM to battery. Magnet RM thereupon operates and rotates the switch wipers into engagement with the first set of bank contacts in the selected level.

The rotary off-normal springs RON are opened as soon as the switch shaft begins to rotate, thereby disconnecting the vertical

wiper VW to prevent any false operation occurring due to earth being subsequently connected to the bank contact on which it is resting, by the initiation of another call for the same level. Shortly after the wipers have been stepped onto the first set of bank contacts the interrupter springs R are opened thereby opening the circuit of relay G. Relay G releases and at armature *g*2 opens the circuit of the rotary magnet RM which in turn releases and allows springs R to close.

Since it has been assumed that the line of the calling subscriber is connected to the third set of bank contacts in the third level test wiper P1 will encounter earth on the first bank contact over the back contact of an armature similar to *lr*1. A circuit is thereby completed over armature *t*3 for the lower winding of relay S. Relay S thereupon operates and at armature *s*1 connects earth to the right-hand terminal of its upper winding, this winding, however, being short-circuited at this time by earth picked up over wiper P1. At armatures *s*2 and *s*3 the line conductors are transferred to the upper set of wipers and at armature *s*4 the testing circuit is transferred from wiper P1 to wiper P2. It will be seen, that as long as wiper P2 encounters earth, relay H will remain short-circuited, by earth connected to its left-hand terminal over armatures *s*4 and *h*6 and by earth connected to its right-hand terminal over armature *b*1, and as long as wiper P1 encounters earth the upper winding of relay S will be short-circuited.

When wiper P2 is connected up the following circuit is completed: earth, armature similar to *lr*1, bank contact and wiper P2, armature *s*4, armature *h*6, and its back contact, back contact of armature *t*2, and said armature, springs V, springs R, winding of relay G to battery. Relay G thereupon again operates, completes a locking circuit for itself at armature *g*1, and at armature *g*2 closes the circuit of the rotary magnet. The rotary magnet operates and steps the wipers into engagement with the second set of bank contacts and towards the end of its stroke opens the circuit of relay G at interrupter springs R; relay G then releases and at armature *g*2 opens the circuit of the rotary magnet. Earth is again picked up over wiper P2 and relay G again operates to complete the circuit of the rotary magnet RM, whereby the wipers are stepped into engagement with the third set of bank contacts.

It is being assumed that the contacts of the calling line are then encountered by the upper set of wipers. In this case, the short-circuit is removed from relay H, which thereupon operates in the following circuit: earth, armature *b*1, winding of relay H, front contact of armature *t*2 and said armature, springs V, springs R, winding of relay G to battery. Relay G does not operate in this circuit owing to the relatively high resistance of relay H.

If, however, the contacts of the calling line are encountered by the lower set of wipers, wiper P1 will fail to encounter earth and the short-circuit about the upper winding of relay S will be removed. The windings of relay S are arranged in opposition so that when current flows through both windings in series relay S releases. Due to the release of relay S the lower set of line wipers are connected up and the earth picked up over wiper P2 is disconnected from the left-hand terminal of relay H, whereupon relay H operates in the circuit previously described.

Relay H, upon operating, closes a locking circuit for itself at armature *h*1, independently of armature *t*2, at armature *h*2 completes a locking circuit for the lower winding of relay S independently of armature *t*3, assuming that the calling line has been encountered over the upper set of wipers, at armatures *h*4 and *h*5 extends the calling loop to relay A to maintain this relay operated, and at armature *h*6 extends earth over wiper P2 thereby completing the following circuit: earth, armature *b*1, front contact of armature *h*6 and said armature, front contact of armature *s*4 and said armature, wiper P2 and the bank contact which it is engaging, armature *lr*1 and its front contact, right-hand winding of relay LR, winding of relay CO to battery. Relay LR is maintained operated in this circuit: relay CO now operates at armatures *co*1 and *co*2 removes the normal battery and earth connections from the calling loop, and at armature *co*3 removes the earth connection from armature *lr*2, to the start conductor 16, so that if no other subscribers are calling in sub-groups 1—5 relay AX will release. Due to the operation of relay H earth is connected over armature *h*3 and wiper 17 to operate relay AE.

Relay AE thereupon operating opens the circuit of relay AD at armature *ae*2 and at armature *ae*1 removes the earth connection extending over wiper 15 to the upper winding of relay A. Due to the release of relay AD a circuit is completed for driving magnet DM1 as follows: earth, operated off-normal springs N1 of the finder, bank contact and wiper 18, back contact of armature *ay*3 and said armature, armature *ad*1, armature *az*1, interrupter springs and winding of magnet DM1 to battery. Magnet DM1 thereupon operates and opens its own circuit at its interrupter springs, and upon releasing steps the wipers of the finder allotters FA1 into engagement with the next set of bank contacts. If the finder connected to this bank contact is busy, earth will again be encountered by wiper 18 and the driving magnet DM1 will again be operated and on release will step the wipers into engagement with the next set

of bank contacts. When wiper 13 leaves the bank contact associated with the finder shown the circuit of the left-hand winding of relay T is opened and this relay releases but without effect.

The intermittent operation of driving magnet DM1 will continue until wiper 18 no longer encounters earth, and the wipers of the finder allotter FA1 are thus engaging an idle finder in readiness for the next call. It will be noticed that relay AE is maintained operated by earth picked up over wiper 17 as long as busy finders are encountered, and relay AE therefore at armature *ae*2 maintains open the circuit of relay AD until an idle finder has been selected, whereupon relay AE releases and prepares a circuit for relay AD which will then operate, if relay AX is already operated or when relay AX operates due to a calling subscriber in sub-groups 1—5 initiating a call.

It should be mentioned that the selector is of well-known step-by-step two-directional type and that dial tone is transmitted back when the calling loop has been extended to relay A. The calling subscriber may then dial the digits of the wanted number to extend a connection in the well-known manner. When the called subscriber replies a speaking connection is completed between the calling and called subscribers and the calling subscriber's meter SM is operated. When the calling subscriber releases the connection by hanging up his receiver, earth is removed from the release trunk conductor and the switching relay of the selector releases, whereupon earth is connected up over the back contact of an armature of this relay, armature *a*1, armature *b*2, off-normal springs N, winding of release magnet Z to battery, and in a parallel circuit, off-normal springs N2, winding of release magnet ZM to battery. Release magnets Z and ZM thereupon operate and cause the finder switch and its associated selector switch to restore to normal.

Referring now to relay AB, it has already been mentioned that this relay is normally maintained operated as long as an idle finder is available in the A group. Its circuit may be traced as follows: battery, winding of relay AB, off-normal springs N2, armature *b*2, armature *a*1, armature of the switching relay of the selector, to earth. When the last idle finder in the A group is taken into use this circuit of relay AB will be opened.

Relay AB is however maintained locked operated over the following circuit: battery, winding of relay AB, operated armature *ab*1, armature *ad*4 to earth. This circuit is maintained until the last available finder which has just been taken into use in the A group has found the calling line, and relay AD has released, provided that in the meantime none of the finders in the A group have restored to normal.

It may be mentioned at this point that if a finder is set in operation by a calling subscriber momentarily lifting his receiver it will continue to operate and will step vertically until it reaches the fifth level in the case of the A and B group and the tenth level in the case of the C group. The finder will then rotate over the contacts of this level and since it does not find a calling line it will step clear of the bank contacts, as earth is thereby disconnected from the test wipers relay H will operate to operate relay AE thereupon the finder allotter will step into engagement with the next idle finder. The circuit of relay A is thereby opened and as this relay is not maintained over a calling loop it will release and open the circuit of relay B which will in turn release and complete a circuit for the release magnet ZM whereupon the finder switch restores to normal.

When all the finders in the A group are busy and relay AB is normal, a circuit is prepared for relay AX at armature *ab*4. The effect of the operation of relay AY is to cause the finder allotter FA1 to preselect an idle finder in the common group comprising finders 11—20, that is to say, wiper 23 now hunts over its associated bank in a manner similar to that in which wiper 18 hunted over its associated bank, contacts 1—10 and 20—25 in the bank associated with wiper 23 being connected to earth. Except for the arrangement of the wipers and banks the finder switches in the common group are similar to those in the A group and the finder taken into use hunts for the calling level and then for the contacts of the calling line in that level in the manner already described.

When a call is initiated by a subscriber in sub-groups 1—5, relay AX operates and at armature *ax*3 causes the operation of relay AY which relay upon operating prepares a locking circuit for itself at armature *ay*1 which is almost simultaneously completed at armature *ad*5, and at armature *ay*3 transfers the preselecting circuit of the driving magnet DM1 to wiper 23. At armature *ay*1 relay AY completes the locking circuit for itself so that relay AY will remain operated until the hunting finder has connected with contacts of the calling line, so that even if finders become idle in the A group, relay AY will be maintained operated to hold armature *ay*5 closed to allow the hunting finder to complete its operation.

In a similar manner calls originating from subscribers in sub-groups 6—10 are normally extended by the operation of finders in the B group, these finders comprising finders 21—30 are taken into use by the finder allotter FA2 which operates to preselect an idle finder in a manner similar to that already described in connection with finder allotter FA1. When the calling subscriber lifts his receiver, earth is connected to corresponding

vertical bank contact and relay BX is operated. Relay BX in turn operates relay BD which extends earth over armature *bd*2 to set in operation a finder in the B group, the operation of this finder being the same as that already described.

Relay BB which is normally operated has its common circuit opened if all the finders in the B group are busy but is locked operated over armatures *bb*1 and *bd*5 until the hunting finder has found the calling line. When relay BB releases, it prepares a circuit at armature *bb*4 for relay BY which operates. If a call is then received to operate relay BX relay BY operates and at armature *by*1 prepares a locking circuit for itself which is almost simultaneously completed at armature *bd*5, and at armature *by*3 changes over the preselecting circuit of the driving magnet DM2, so that the wipers of the finder allotter FA2 will be advanced into engagement with an idle finder in the C group. The operation of this finder is similar to that already described but in this case it will be necessary for the switch to take five more vertical steps to connect with the calling line. It will be noticed that relay BY is locked operated to hold closed the circuit of relay BD at armature *by*5 as long as a finder is hunting so that even if a finder becomes available in the B group, it will not be taken into use until the hunting finder has completed its operation.

In exceptional circumstances, it may happen that all the finders in the common group become busy, in this case when the last finder in the common group has finished hunting relay CB as well as either relay AB or relay BB or both relays AB and BB will be released. Upon the release of relay CB, a circuit is completed at armature *cb*2 for relay AZ if all the finders in the B group are operated, that is, if relay BB is released.

If further calls are initiated causing the operation of either relay AX or relay BX at a time when all the finders are in use, that is, when both relays AZ and BZ are operated, a circuit will be completed for the overflow meter OM as follows: earth, armature *az*2, armature *bz*2, armature *ax*2 or armature *bx*2, winding of overflow meter OM to battery. In order to provide a record of the number of times all the finders in each group are busy, separate meters are provided one for each group. The release of relay AB causes a circuit to be completed for the meter connected to conductor 19, by actuating armature *ab*3. At armature *bb*3 a circuit is completed for the meter of the B group over conductor 20, while at armature *cb*3 a circuit is completed for the meter of the C group over conductor 21.

If all the finders accessible to the finder allotter FA1 are busy, that is, if all the finders in the A and C groups are busy, relays AY and AZ will be operated and the circuit of the driving magnet DM1 will be held open at armature *az*1 thereby preventing unnecessary rotation of the wipers of the allotter and at the same time preventing the operation of relay AD. It is necessary to prevent relay AD being maintained operated by opening its circuit at armature *az*1 as otherwise it would be possible for relay AY to be held operated at armature *ad*5 even when idle finders were available in the B group and relay AB had again operated. Similar remarks apply if all the finders accessible to the finder allotter FA2 are busy.

A condition that will occur during busy periods is that all the finders in both the A and B groups are busy and calls from each group of lines normally served by the A and B groups respectively will be served by finders of the C group. When employing the simplest form of circuits it would be possible therefore in the case of calls initiated simultaneously by a subscriber in sub-groups 1—5 and by a subscriber in sub-groups 6—10 for two finders in the C group to be set in operation simultaneously. Both these finders will cut in on the lowest level marked by the connection of earth to the corresponding vertical bank contact, i. e. on the level in sub-groups 1—5, the possibility then exists of both finders connecting with the same calling line but generally one switch will seize the calling line and the other will be rotated clear of the bank and will restore to normal thereby stepping the finder allotter into engagement with the next idle finder. This finder will then be started up but it is possible that at the same time another finder is started up in the C group over the allotter FA2 so that the same sequence of operations will take place; the effect therefore will be that the subscribers in sub-groups 6—10 will be crowded out. It will be seen that this disadvantage is overcome as shown in Fig. 1, by arranging that the five lower vertical bank contacts are disconnected when a finder in the C group is taken into use by the finder allotter FB. The possibility of double connections and useless hunting of finder switches set in operation simultaneously is avoided by arranging that if calls are initiated in the A and B groups simultaneously either relay AD or relay BD will be operated so that only one finder will be set in operation. The exact operation will now be described in detail.

Relays AB and BB which are normally operated, release when the last idle finders in the A and B groups respectively have found. A circuit is prepared for relay AY at armature *ab*4 and for relay BY at armature *bb*4. If a subscriber in sub-groups 1—5 now calls relay AX operates and at armature *ax*3 completes the circuit of relay AY which operates, prepares a locking circuit for itself at armature *ay*1 and completes a circuit for relay AD as follows: battery,

winding of magnet DM1 and interrupter springs, armature *az*1, winding of relay AD, armature *ae*2, armature *ay*5, armature *a*1 to earth. Relay AD operates and thereby starts the operation of a finder which hunts as already described; the vertical marking earth is extended to the common group by the operation of relay AY at armatures *ay*7—*ay*11. Relay AY also at armature *ay*6 opens the circuit of relay BY to prevent this relay operating if a call is initiated in sub-groups 5—10 whilst the finder taken into use over finder allotter FA1, is hunting.

Considering the case in which relays AB, BB, AY and BY are released and a call is initiated and operates relay BX. Relay BY then operates, prepares a locking circuit for itself at armature *by*1, opens a point in the circuit of relay AY at armature *by*6 and at armature *by*5 completes a circuit for relay BD as follows: battery, winding and interrupter springs of relay DM2, armature *bz*1, winding of relay BD, armature *bc*2, armature *by*5, armature *bx*1 to earth. Relay BD operates to cause a finder to hunt for the calling line as already described, and at armature *bd*5 completes the locking circuit of relay BY. It will be realized that calls initiated in sub-groups 1—5 at this time will not affect the operation of the hunting finder as the circuit of relay AY is held open at armature *by*6 to prevent the finder in the common preselector over the finder allotter FB from operating; and at the same time the starting earth connections to the lower five vertical bank contacts are disconnected at armatures *ay*7 to *ay*11, this latter disconnection could equally well be effected by the opening of normally closed armatures on relay BY.

It may happen that due to a faulty operation the finder taken into use will fail to establish connection with the calling line, so that relay AE will not be operated. A circuit is then completed over armatures *ad*6 and *ae*3 for the fault alarm lamp FA and at the same time a circuit is completed for the slow-acting alarm over conductor 22 for attracting the attention of an attendant if undue delay occurs. A similar parallel circuit is provided for the finder allotter FA2 at armatures *bd*6 and *be*3.

A modification in the method of grouping the finders is shown in Fig. 1*a*. In this case, the common group is divided into two sub-groups as shown in Fig. 1*a*, the common group comprising finders 11—20 is divided into two sub-groups 11—15 and 16—20; the connections between the upper and lower halves of the banks of these two sub-groups are reversed in the manner shown, and at the same time the connections to the finder allotter FA2 are reversed as regards each of the B and C groups separately. It will generally happen that if all the finders in the A group are busy, the next finder taken into use by the allotter FA1 will be finder No. 11 and it will be seen that the number of vertical steps to be taken by this finder will be the same as if a finder in the A group had been employed. This also applies to finders 12, 13, 14 and 15, and it is only when finders 16—20 are taken into use that more than five vertical steps will be required to find the calling level. Similarly, if all the finders in the B group are busy, the next idle finder generally taken into use will be finder No. 20, and this finder will only be required to take the same number of vertical steps as if a finder in the B group had been employed. In the majority of cases, therefore, even when a finder in the common group is taken into use the number of vertical steps to be taken will not be greater than five.

Referring now to Fig. 2, as already explained this modification employs finders all arranged to hunt over 10 levels; the finders in the A and B groups are each provided with only one set of wipers and have access to 100 lines and the finders in the C group are each provided with two sets of wipers and are arranged to hunt simultaneously over two banks so that they have access to 200 lines. The circuit arrangement of the finders in the C group may be the same as that shown in Fig. 1, the circuit of the finders in the A and B groups may be that shown in Fig. 2*a*. This circuit is in general the same as that shown in Fig. 1, except that relay S has been dispensed with and only one set of wipers is required, the overflow and fault arrangements have not been shown, while for the purpose of avoiding complication of the figure, the connection to the banks of the allotter FA2 have not been shown as these are the same as those shown in Fig. 1.

If all the finders in the A group are busy, relay AB releases and prepares a circuit for relay AY. If a further call is then initiated, to operate relay AX the circuit of relay AY is completed at armature *ax*3, relay AY thereupon operates and causes the finder allotter FA1 to select an idle finder in the C group. At armatures *ay*7 to *ay*15 the vertical bank contacts of the A group are connected to the vertical bank contacts of the C group, and the selected idle finder in the C group then operates in the manner already described in connection with Fig. 1. Similarly, if all the finders in the B group are busy, and a call is initiated to operate relay BX, relay BY is operated over armatures *bb*4, *ay*6 and *bx*3 and upon operating at armatures *by*7—*by*15 connects the vertical bank contacts of the B group to the vertical bank contacts of the C group. If calls are initiated simultaneously to cause both relay AX and relay BX to operate when relays AB and BB are released, then either relay AY or relay BY is operated so that only one finder is set in operation; this has already been described in

detail in connection with Fig. 1, and need not therefore be described here.

Another modification of this arrangement is shown in Fig. 2*c*. In this arrangement the finders in the A and B groups are the same as before, namely, as shown in Fig. 2*a*. The finders in the common group, however, are not arranged to hunt in two levels simultaneously but are provided as shown in Fig. 2*b* with a discriminating relay D which is operated before hunting takes place and determines which set of wipers is to be used. In this case two vertical wipers VW1 and VW2 are necessary together with their associated vertical banks VC1 and VC2; the vertical banks VA and VC1 are connected together and the vertical banks VC2 and VB are connected together.

It should be made clear at this point that when the finders in the common group are provided with two vertical wipers no harm will result if two of these finders are hunting simultaneously so that the arrangement of relays AY and BY for ensuring that only one finder can hunt at a time are no longer necessary. These relays have therefore been dispensed with in Fig. 2*b* and moreover relay AD now when once operated to start a finder hunting remains operated until its circuit is opened by the operation of relay AE when the finder has found, and it is not necessary therefore to provide a locking circuit for relay AB, for the same relay it is not necessary to provide a locking circuit for relay BB.

If a call is initiated when all the finders in the A group are busy, at armature *ay* earth is extended over a wiper of the allotter FA1, which is now resting in engagement with an idle finder in the C group, and thereby causes the operation of relay D which thereupon locks up to earth on the release trunk conductor. Relay D upon operating switches over the connections to the upper set of wipers and connects up wiper VW2 instead of wiper VW1. Subsequent operation of the finder takes place as previously described except that hunting takes place over the wipers VW2 and P2 only.

If, however, a call is initiated when all the subscribers in the B group are busy, relay D will not be operated since the corresponding earth connection is not made owing to the fact that the additional wiper has been omitted from the finder allotter FA2. The lower set of wipers will therefore remain connected up and wiper VW1 will hunt over the vertical bank VC1 to select a calling level and thereafter the wiper P1 will hunt in the calling level to find the calling line. If calls are initiated simultaneously in the A and B groups at a time when all the finders in the A and B groups are busy, two finders of the common group will be set in operation, but no interference between them will be experienced since one finder will hunt over one set of wipers and the other finder will hunt over the other set of wipers. It will be realized that it may be desirable to employ the arrangement shown in Fig. 2*b* of having two vertical test wipers for finders in the common group in conjunction with the arrangement shown in Fig. 1, for the finders in the A and B group; this combination may be most easily considered by taking Fig. 2*b* in conjunction with the finder shown at the top of Fig. 1, and the vertical bank connections shown in the lower left-hand corner but with direct connections substituted for the *ay* armatures. In this case the vertical bank contacts VC will be arranged so that wiper VW1 will engage the first five vertical bank contacts and wiper VW2 will engage the last five vertical bank contacts. The hunting finder will then hunt for the calling level over wiper VW1, if it has been taken into use by the finder allotter FA1, and over wiper VW2 if it has been taken into use by the finder allotter FA2. Simultaneous hunting will then take place as described in connection with Fig. 1. It will be understood that by suitably arranging the discriminating earth connection in the banks of the finder allotters, this arrangement may be extended to the vertical bank connections shown in Fig. 1A.

It will be noted that in Fig. 2*b*, the locking circuits of relays AB, BB and BC have been omitted and relay AY and BY have also been omitted but the circuits of relay AZ and BZ have been modified. It will be seen that, as is the case in Fig. 1, relay AZ is prevented from operating when a finder is hunting but in the present case this object is attained by opening the circuit of relay AZ at armature *ad*4 and as relay AD is held operated until the hunting finder has completed its operation the circuit of relay AZ will be maintained open at armature *ad*4 to prevent relay AZ operating its armature *az*1. Similarly the circuit of relay BZ is controlled by armature *bd*4 to prevent relay BZ operating until the last available finder in the combined B and C groups has completed its operation. It will, however, be understood that the arrangement of relay AB, BB, BC, AY, BY, AZ and BZ may be identical with that shown in Fig. 1, and in this case it is only possible for one finder in the common group to be hunting at a time.

Referring now to Figs. 3 and 4, the general arrangement of the finder circuit is similar to that shown in Fig. 1, and it need not therefore be described in detail, but in place of the rotary line switch allotters relays are employed, for preselecting an idle finder. A separate start relay is provided for each subgroup of subscribers, instead of for each five sub-groups. It will be seen from Fig. 3 that an extra relay HR is provided for each and

this relay upon operating extends the starting connection to the next idle finder over a chain circuit of armatures similar to *hr*3. When a call is initiated by a subscriber in the first sub-group, relay AX is operated and at armature *ax*2 connects earth to the upper winding of relay A, thereby effecting the operation of relay A and also closes a circuit for relay G, thereby causing the finder to step up to the calling level in the manner previously described. Relay T then operates and the finder rotates over the calling level until the calling line is found, whereupon relay H operates in the manner previously described. Relay H upon operating, completes a circuit at armature *h*3 for relay HR. Relay HR thereupon at armature *hr*1 closes a locking circuit for itself over the operated off-normal springs N1, at armature *hr*2 opens the locking circuit of the left-hand winding of relay T, while at armature *hr*3 disconnects the direct earth connection from the upper winding of relay A, which is now maintained operated over the calling loop and extends the starting lead through to an armature similar to *hr*3 of the second finder in the sub-group L1, to prepare for the operation of this finder if it is not already busy, if it is busy the starting connection will be extended over the front contact of armature *hr*3 of the finder.

At the end of the call, when the calling subscriber hangs up, relay H releases, the initial energizing circuit of relay HR is open at armature *h*3 and a circuit is completed for the release magnet ZM of the finder switch which operates and causes the switch shaft to restore to normal. The locking circuit of relay HR is momentarily opened at the off-normal springs N1, but if a subscriber in sub-group L1 is calling, and armature *ax*2 is therefore closed, the locking circuit of relay HR will be re-established before this relay has had time to release.

It will thus be seen that as long as any finders are hunting dependent upon earth connected up at armature *ax*2 the chain circuit to the hunting finder will be maintained until it has completed its operation, since as just described, relays HR which are released in the meantime will be maintained energized by a circuit extending over armature *hr*1 and off normal springs N1. This is true even if the finder being operated is in another sub-group, for example, if the finder FN in sub-group L2 is being operated by earth connected up at armature *ax*2 and the finder F1 in sub-group L2 has been set in operation by earth connected up at armature *ay*2; then if at this time the finder FN in sub-group L1 restores to normal, earth will still be connected from armature *ax*2 over the front contact of armature *ab*4 to the finders in sub-group L1. maintain operated the HR relay of finder F1 in sub-group L2, and will be extended over the front contact of armature *hr*3 of this finder to maintain relay HR of the finder FN of sub-group L2 operated.

It will be noted that the starting circuit takes the form of a closed circuit so that if a subscriber calls and operates relay AZ, when all the finders in sub-group L5 are busy, a circuit is completed over the front contacts of armatures *hr*3 of these finders, and over armature *ab*4 to the finders in sub-group L1.

The circuits of relays AB, BB and BC are arranged in the manner described in connection with Fig. 1, and these relays are released when the last available finder in the corresponding group has completed its operation. If all the finders in either the combined A and C groups or combined B and C groups become busy, relays AB and CB or relays BB and CB respectively become operated; in the former case armatures *ab*7 and *cb*1 are operated to remove the starting earth for calls initiated in sub-groups 1—5 and in the latter case armatures *bb*7 and *cb*2 are operated to remove the starting earth for calls initiated in sub-groups 6—10. The disconnection of either of these starting earths prevents the operation of any of the corresponding start relays due to calls being initiated at a time when all the finders arranged to handle the call are busy; this is necessary as otherwise a starting earth would be able to hold all the finders artificially busy, even after some of the finders had restored to normal. Due to the release of relay AB a circuit is prepared for relay AY at armature *ab*4 and similarly due to the release of relay BB a circuit is prepared for relay BY at armature *bb*4. If then a call is initiated in sub-groups 1—5, when all the finders in the A group are busy, relay AY will be operated in the following circuit: earth, armature *aw*1, armature *by*2, armature *ab*4, winding of relay AY to battery, and relay AY upon operating closes a locking circuit for itself at armature *ay*1 independently of relay AB. At armatures *ay*5 — *ay*7 relay AY extends the starting earths to the vertical bank contacts of the common group, at armatures *ay*8 —*ay*12 connects up the auxiliary starting earths for the C group. The operation of any of the start relays AX, AY—AZ then initiates the hunting of a finder in the C group in a manner similar to that already described in connection with the A group. Similarly, if calls are initiated in sub-groups 6—10 at a time when relay BB is released, relay BY will be operated to connect up auxiliary starting earths to the C group and a finder in the C group will be set in operation to hunt for the calling line. If both relays AB and BB are released and calls are initiated simultaneously in sub-groups 1—5 and 6—10, then either relay AY or relay BY will be operated, both these relays cannot be operated at the same time because they open one

anothers circuits. If relay BY is operated the call initiated in sub-groups 6—10 will be dealt with first and a finder in the C group will be taken into use; since the lower five vertical bank contacts are disconnected at this time because relay AY is not operated the finder can only hunt over the upper five levels.

It should be made clear at this point that although several calls may be initiated simultaneously in, for example, the A group to cause the simultaneous operation of several start relays, no confusion will arise. This will be better understood by referring to Fig. 4 showing the chain of *hr*3 armatures and Fig. 4*a* showing the method of slip multiplying. From Fig. 4, it will be seen that the operation of a start relay can only start a finder hunting if the first reached *hr*3 armature which is not operated is not that of a finder which is already hunting. In other words, the connection of starting earth to the chain circuit is only effective up to the point in the circuit in a forwards direction to which the next starting earth is connected. Now taking this in conjunction with Fig. 4*a*, it will be realized that earth connections made to the vertical bank of any sub-group by start relays which have not set in operation the finder in that sub-group will of necessity be made to the bank contacts situated above the one marked by the start relay which set the finder hunting and that therefore in all cases a hunting finder by taking the first marked level will be taking the level in which the calling line is situated. It is impossible for two finders to be caused to hunt simultaneously in the same sub-group of lines, although on the other hand two or more finders may hunt simultaneously in the same level but these levels will correspond to different sub-groups of lines because it is impossible for two finders in the same sub-group to hunt simultaneously.

Referring now to Figs. 5 and 6, these show a modified arrangement of the finder circuit and for the sake of simplicity a modified arrangement of the finder grouping is also employed. Only two groups of finders are used and the finder allotters are arranged so that if all the finders in one group are busy the call will be dealt with by the finder in the other group.

It will be understood, however, that the modified finder circuit may be advantageously used in connection with the finder grouping shown in Fig. 1. The finders employed in the present arrangement have access to 200 lines and are arranged to test in two banks simultaneously. The finders in the A group normally hunt over the first five levels only for the subscribers in the first five sub-groups while the finders in the B group normally hunt over the first five levels for subscribers in the last five sub-groups. The finder circuit has been modified so that the circuit for intermittently operating the rotary magnet is local to the switch and is opened when battery potential on the calling line is picked up by the test wiper.

When the calling subscriber lifts his receiver a loop is completed across conductors 10 and 11 whereupon relay LR operates; at armature *lr*1 connects battery through the winding of relay CO and its own right-hand winding to the test contact of the calling line and at armature *lr*2 connects earth to the first vertical bank contact, while at the same time operating relay AX. Relay AX at armature *ax*1 completes a circuit for relay AD which is similar to those already described; relay AD upon operating connects earth at armature *ad*2 over wiper 13 and conductor 14, back contact of armature *t*2 and said armature, interrupter springs V, interrupter springs R, winding of relay G to battery.

The interrupter relay G thereupon operates and at armature *g*2 completes a circuit for the vertical magnet VM. At armature *ad*3 a circuit is completed for the upper winding of relay A of the selector which thereupon operates and at armature *a*2 completes a circuit for relay B which in turn operates and connects earth to the release trunk conductor at armature *b*2. Due to the operation of the vertical magnet VM the switch shaft and wipers are stepped opposite the first level of bank contacts; wiper VW encounters earth on the first vertical bank contact, relay T then operates in a manner similar to that already described and locks operated over armature *t*1.

The stepping circuit is thereby transferred at armature *t*3 from vertical magnet VM to the rotary magnet RM and at armature *t*2 a circuit is completed for maintaining the interrupter relay G operated as follows: battery, winding of relay G, interrupter springs R, interrupter springs V, armature *t*2, and its front contact, eleventh step cam springs S2, armature *hb*5, armature *ha*5, conductor 14, wiper 13, armature *ad*2 to earth. The rotary magnet operates and towards the end of its stroke opens the circuit of relay G at springs R. The interaction between relay G and the rotary magnet continues in the manner previously described until either the test wiper P1 or the test wiper P2 encounters battery potential connected to the test contact of the calling line.

Assuming that wiper P2 encounters battery first, a circuit is completed for the lower winding of relay HB as follows: battery, winding of relay CO, right-hand winding of relay LR, armature *lr*1, back contact and wiper P2, armature *hb*4, and its back contact, armature *ha*3, lower winding of relay HB, conductor 14, bank contact and wiper 13, armature *ad*2 to earth. Relay HB thereupon operates and completes a locking circuit for

itself as follows: battery, upper winding of relay HB, conductor 15, armature *hb*7, back contact of armature *ha*7 and said armature, armature *b*2 to earth.

Relay HB upon operating extends the calling loop to line relay A of the selector at armatures *hb*1 and *hb*2, opens a point in the circuit of the lower winding of relay HA at armature *hb*3, opens the circuit of its own lower winding at armature *hb*4, opens a point in the locking circuit of the upper winding of relay HA at armature *hb*5 and at armature *hb*6 completes a circuit for relay AE extending over the back contact of armature *g*1 to earth on the release trunk conductor.

Relay AE thereupon operates and causes the finder allotter to step into engagement with the next idle finder in the manner already described. At the front contact of armature *hb*4, earth is extended from the release trunk conductor over wiper P2 and armature *lr*1 through the right-hand winding of relay LR and the winding of relay CO in order to maintain relay LR operated and to cause relay CO to operate. Relay CO upon operating disconnects the normal battery and earth connections from the calling loop at armatures *co*1 and *co*2 and at armature *co*3 disconnects the starting earth. The connection may then be completed by impulses transmitted by the calling subscriber, relay HB being maintained operated over its upper winding.

At the end of the call when the calling subscriber hangs up his receiver, earth is disconnected from the release trunk conductor; relay HB and the switching relay of the selector thereupon release and a circuit is completed for the release magnets of the finder and the selector whereupon these switches restore to normal.

Relay BX is normally operated but releases after the last idle finder in the A group has been operated. When relay BX releases, a point is opened in the circuit of relay AD at the back contact of armature *bx*1 to prevent this relay operating if a call should be initiated at this time, to operate relay AY, at the same time transferring the circuit from armature *ax*1 to relay BD. At armature *bx*3 the stepping circuit of the driving magnet DM1 of the finder allotter FA1 is opened to prevent operation of the finder allotter FA1 until an idle finder becomes available in the A group. At armature *bx*5 a circuit is completed for the overflow meter AGM of the A group, and meter AGM on operating prepares a point in the circuit of the meter LCM at armature *agm*1. It should be made clear at this point that the last five contacts of the right-hand banks of the finder allotters are permanently connected to earth, the corresponding contacts in the other banks being left disconnected, and for spare positions. At the front contact of armature *bx*5, earth is disconnected from the common earth connection connected to the contacts associated with the finders 1—10 in the A group, but at the same time at armature *bx*4 the preselecting circuit is extended to the bank associated with wiper 16 so that as long as all the finders in the A group are busy, wiper 16 will encounter earth. The circuit of relay BX is maintained open at armature *bd*5 as long as a finder is hunting so that even if a finder becomes available in the A group the finder allotter FA2 will remain in engagement with that finder to allow it to complete its operation. The operations which take place when all the finders in the B group are busy are similar to those just described, relay BY then being released; at armature *by*5 earth is disconnected from the bank contacts associated with finders in the A group and a circuit completed for the meter BGM, at armature *by*4 the preselecting circuit of magnet DM1 is extended to wiper 17 and at armature *by*1 the starting circuit extending from armature *ay*1 is transferred from relay BD to relay AD and a point closed in the circuit of meter LCM. If both groups of finders are busy simultaneously, the circuit for lost calls meter LCM is completed over contacts AGM1 and BGM1 whenever relay AX or relay AY operates, to record the number of calls initiated at this time.

If either finder allotter should become faulty, the attendant is able to cause all the calls to be handled by finders taken into use over the other allotter of the other group; this is accomplished by the operation of key XK if the finder allotter FA1 is faulty and by the operation of key YK if the finder allotter FA2 is faulty. If the key XK is operated, relay AX is disconnected at springs XK1, and the common connection from the vertical bank of the A group is extended to relay AY; at spring XK2, relay BX is disconnected and the common busy lead is extended to relay BY. Relay BX releases and performs the functions already described, the conditions, however, are different since finders are available in the A group and are therefore selectable over wiper 16. It will be seen therefore that both groups of finders will be taken into use by the allotter FA2 independently of the sub-group in which the calling line is located.

A routine test may be made by the finders in the A group by operating key RK thereby connecting earth to the fifth vertical bank contact. The finder engaged by finder allotter FA1 thereupon operates to the fifth level and rotates in search of the calling line. On operating to the eleventh step, cam springs S1 and S2 operate thereby operating relay AE at springs S1 and opening the circuit of relay G at springs S2. The finder allotter thereupon steps into engagement with the

next idle finder and at wiper 15 a circuit of the upper winding of relay A is opened. Relay A thereupon releases and by opening armature *a*1 allows relay B to release. A circuit is thereupon completed for the release magnets of the finder and selector whereupon these restore to normal. The next finder is thereupon operated in a similar manner, and the test continues until all the finders have been tested. The finders in the B group may be routined in a similar manner by the operation of routine key SK.

Referring now to Figs. 7 and 8, the general arrangements shown are similar to those shown in Figs. 5 and 6 but the number of relays required for the finder selector link has been reduced by combining the functions of certain of the relays, the grouping of the finders and allotting arrangements may be similar to that shown in Fig. 1, but for the sake of convenience the arrangement actually shown is identical with that shown in Figs. 5 and 6. Upon the initiation of a call relay A is operated and at the same time earth is connected to conductor 14 in the manner previously described a circuit is thereby completed over the interrupter springs V of the vertical magnet of the finder switch, interrupter springs R of the rotary magnet of the finder switch, interrupter springs R1 of the rotary magnet of the selector switch, winding of relay G to battery. Relay G thereupon operates and at armature *g*2 completes the circuit of the vertical magnet VM. The operation of the vertical magnet opens the circuit of relay G at interrupter springs V whereupon relay G releases and opens the circuit of the vertical magnet VM at armature *g*2. When the vertical magnet releases, the springs V again close, relay G then operates and re-closes the circuit of magnet VM. The vertical stepping continues until wiper VW encounters earth whereupon a circuit is completed as follows: earth on the vertical bank contact, wiper VW, rotary off-normal springs RON, right-hand winding of relay T, interrupter springs R, interrupter springs R1, winding of relay G to battery. Relay T thereupon operates and locks up over its left-hand winding in the following circuit: battery, left-hand winding of relay T, armature *t*1, front contact of armature *a*1, and said armature, armature *h*1 to earth. Relay T upon operating, in addition to performing the operation already described in connection with Fig. 6 connects earth to the release trunk conductor at armature *t*4, and at armature *t*5 opens a point in the circuit of the release magnets of the finder and the selector and prepares the circuit of the vertical magnet VM of the selector. It will be seen therefore that relay T in this case takes over the functions previously performed by relay B of the selector, and is locked operated dependent upon relay A and not, as in the previous case, upon earth connected up over a wiper of the finder allotter.

At armature *t*3, the interrupter circuit is completed to the rotary magnet RM which thereupon operates and at its interrupter springs R opens the circuit of the interrupter relay G; relay G again interacts with the rotary magnet to control the rotary stepping of the wipers of the finder until the bank contacts of the calling line are reached. Relay AE is then operated and the finder allotter steps into engagement with the next idle finder.

The calling loop is extended by the operation of relay HA or relay HB to relay A of the selector and the calling subscriber will then operate his impulse sender to operate the selector switch. Relay A releases upon the reception of each impulse and due to the intermittent operation of its armature *a*1, an impulsing circuit is completed as follows: earth, armature *h*1, armature *a*1, and its back contact, winding of relay C, armature *t*5 and its front contact, winding of vertical magnet VM of the selector switch to battery. Relay C remains operated in this circuit throughout the train of impulses and at armature *c*2 holds open the circuit of the rotary and vertical magnets of the finder switch. Upon the first vertical step of the switch the off-normal springs are closed, thereby closing a point at springs N4 in the circuit of release magnet Z; at springs N1 earth is connected to the left-hand terminal of relay H and at springs N3 a circuit is completed for relay G as follows: battery, winding of relay G, interrupter springs R1, off-normal springs N3, armature *c*1, and its front contact, off-normal springs N1, armature *t*4 to earth. Relay G upon operating completes a locking circuit for itself as follows: earth, armature *h*1, armature *g*1 and its front contact, off-normal springs N3, interrupter springs R1, winding of relay G to battery.

Shortly after the end of the first series of impulses when relay C releases, a circuit is completed for the rotary magnet RM, at the springs controlled by armature *a*1. The rotary magnet upon energizing advances the switch wipers into engagement with the first set of bank contacts in the selected level and towards the end of its stroke opens the interrupter springs R1 thereby opening a circuit of relay G. The interaction between the rotary magnet RM and interrupter relay G then continues in the well known manner until the test wiper (connected to conductor P) no longer encounters earth whereupon relay H operates in the following circuit: earth, armature *t*4, off-normal springs N1, winding of relay H, normally closed cam springs S, off-normal springs N2, off-normal springs N3, interrupter springs R1, winding of relay G to battery. Owing

to the relatively high resistance of relay H, relay G does not operate in this circuit.

Relay H, upon operating, connects direct earth forward at armature *h*2 and at armature *h*1 opens a further point in the circuit of release magnet Z. At other armatures, not shown, relay H opens the circuit of relay A which releases and is followed shortly afterwards by relay T, in the interval however earth is connected back over the release trunk conductor by the succeeding switch in the well known manner to maintain relay H operated. Subsequent series of impulses control the completion of the connection in well known manner, relay H being maintained operated in series with relay G by earth fed back over the release trunk conductor. At the end of the conversation when the calling subscriber hangs up his receiver, earth is removed from the release trunk conductor, relay H releases and at armature *h*1 completes a circuit for the release magnets of the finder switch and selector switch, whereupon these switches restore to normal. Relay C operates in series with the release magnets, at armatures *c*1 opens the circuit of magnet RM and at armature *c*2 opens the circuit of magnets RM and VM to prevent false operation of these magnets while the switch is restoring to normal.

Referring now to Fig. 9, this shows a modified circuit for the finder switch the arrangement of the allotters and vertical bank contacts is not shown but may be similar to those already described. In this modification, the interrupter relay takes the form of a shunt field relay, this type of relay is well known and is provided with two windings arranged on parallel cores arranged so that when the circuits of both windings are completed the magnetic fields oppose one another and produce a resultant field which operates the armature but if only one winding is energized the armature is not operated. The vertical stepping operation of the switch is similar to that already described, relay G being operated intermittently over both its windings. Upon the operation of relay T the windings of relay G which have hitherto been connected directly in parallel are now connected each to a test wiper of a switch.

The rotary magnet is then energized over armature *t*4 and armature *g*3 and steps the wipers into engagement with the first set of bank contacts in the selected level, and at its interrupter springs R opens the circuits of both windings of relay G. It will be noted that when relay G is operated, switching relays HA and HB are short-circuited by earth connected up at armatures *g*2 and *g*1 respectively but when relay G releases the direct short-circuits are removed; relay HA is then connected to test wiper P1 and relay HB is connected to test wiper P2. If wipers P1 and P2 encounter earth, relays HA and HB will remain short-circuited and the circuits of both windings of relay G will again be completed when the interrupter springs R close upon the de-energization of the rotary magnet RM.

If, however, the test wiper P2 fails to encounter earth, the circuit for the right-hand windings of relay G will not be completed and the relay will fail to operate. Relay HB is thereupon operated, and at armature *hb*5 closes a locking circuit for itself in series with the right-hand winding of relay G, while at armature *hb*3 it opens a point in the initial energizing circuit for relay HA. At armatures *hb*1 and *hb*2 the calling loop is extended to relay A of the selector and the call may then proceed in the manner already described. Similarly, if wiper P1 engages with the calling line the circuit of the left-hand winding of relay G will not be completed and relay HA will operate to open the circuit of relay HB and extend the calling loop to relay A in the selector.

If both sets of wipers encounter calling lines simultaneously, the circuits will be completed for both relay HA and relay HB. As, however, relay HA is adjusted so that its armature *ha*3 will open before the corresponding armature of relay HB, relay HA is given preference and will energize and open the circuit of relay HB.

Referring now to Figs. 10 and 11, the circuit of the finder switch shown is identical with that shown in Figs. 5 and 6, but in the present case the finder allotters are arranged to establish connection with up to fifty finders in order to provide for exceptionally heavy traffic. It will be realized that the arrangement shown, in which 25 finders are dealt with by the allotter FA1 and 25 different finders are dealt with by the allotter FA2 is the ultimate development of the arrangements shown in Fig. 1, where the number of finders has been increased to the maximum capacity of the allotters, and the common group of finders is reduced to zero. Arrangements similar to those already described in connection with Figs. 5 and 6 are provided for completing the call over the finders of the B group if all the finders in the A group are busy and for completing calls over the A group if all the finders in the B group are busy.

At the same time, arrangements are provided whereby if either finder allotter develops a fault an attendant may by the operation of the corresponding key shown at the bottom of Fig. 11 cause a spare finder allotter connected to the same finders as the faulty allotter to be employed.

If the finder allotter FA1 develops a fault the attendant will throw key A thereby causing the operation of relay CDX which by operating armatures *cdx*1–*cdx*5 inclusive will connect up a spare finder allotter having

its bank contacts commoned to those of the finder allotter FA1. In a similar manner if the finder allotter FA2 develops a fault the attendant will throw key BK thereby causing relay CDY to operate and relay CDY upon operating will connect up at armatures *cdy*1–*cdy*5 inclusive the spare allotter which has its bank contacts commoned to those of the finder allotter FA2.

What I claim as new and desire to secure by Letters Patent is:

1. In a telephone system, a first group of finders having a predetermined capacity, a first group of subscribers' lines of said predetermined capacity accessible to each finder in the first group, a second group of finders having double the capacity of the first group of finders, a second group of subscribers' lines of said predetermined capacity and said first group of lines accessible to each finder in the second group, a step-by-step allotter having wipers for selecting idle finders in said first and second groups, and means in said allotter responsive to the initiation of a call by one of said lines in the first group for initiating the operation of an idle finder in either of said groups over a wiper of said allotter.

2. In a telephone system, a first group of finders having a predetermined capacity, a first group of subscribers' lines of said predetermined capacity accessible to each finder in the first group, a second group of finders having double the capacity of the first group of finders, a second group of subscribers' lines of said predetermined capacity and said first group of lines accessible to each finder in the second group, a step-by-step allotter having wipers for selecting idle finders in said first and second groups, and means in said allotter responsive to the initiation of a call by one of said lines in the first group for initiating the operation of a finder in the first group over a wiper of said allotter and for initiating the operation of a finder in the second group over said wiper only in case all the finders in the first group are busy.

3. In a telephone system, a first group of finders having a predetermined capacity, a first group of subscribers' lines of said predetermined capacity accessible to each finder in the first group, a second group of finders having double the capacity of the first group of finders, a second group of subscribers' lines of said predetermined capacity and said first group of lines accessible to each finder in the second group, a step-by-step allotter having wipers for selecting idle finders in said first and second groups, means in said allotter responsive to the initiation of a call by one of said lines in the first group for initiating the operation of an idle finder in either of said groups over a wiper of said allotter, and means in the finders of the second group for simultaneously testing a plurality of said lines when hunting for a calling line.

4. In a telephone system, a first group of finders having a predetermined capacity, a first group of subscribers' lines of said predetermined capacity accessible to each finder in the first group, a second group of finders having double the capacity of the first group of finders, a second group of subscribers' lines of said predetermined capacity and said first group of lines accessible to each finder in the second group, a step-by-step allotter having wipers for selecting idle finders in said first and second groups, means in said allotter responsive to the initiation of a call by one of said lines in the first group for initiating the operation of a finder in the first group over a wiper of said allotter and for initiating the operation of a finder in the second group over said wiper only in case all the finders in the first group are busy, and means operative after the initiation of a finder in the second group for maintaining such finder in use until a calling line has been found independently of whether finders in the first group in the interim become idle.

5. In a telephone system, a first group of finders, a first group of subscribers' lines accessible to each of the finders in said first group, a second group of finders, a second group of subscribers' lines accessible to each of the finders in said second group, a third group of finders, each finder in the third group having access to all said lines in the first and second groups, a first step-by-step allotter including wipers controlled by said lines for selecting idle finders in said first and third groups over a wiper of said allotter, a second step-by-step allotter including wipers controlled by said lines for selecting idle finders in said second and third groups over a wiper of said allotter, means in said first allotter responsive to the initiation of a call by one of the first group lines for initiating the operation of a finder in either the first or third groups over a wiper of said first allotter, and means in said second allotter responsive to the initiation of a call by one of the second group lines for initiating the operation of a finder in either the second or third group over a wiper in the second allotter.

6. In a telephone system, a first group of finders, a first group of subscribers' lines accessible to each of the finders in said first group, a second group of finders, a second group of subscribers' lines accessible to each of the finders in said second group, a third group of finders, each finder in the third group having access to all said lines in the first and second groups, a first step-by-step allotter including wipers controlled by said lines for selecting idle finders in said first and third groups over a wiper of said allotter, a second step-by-step allotter including wipers controlled by said lines for selecting idle finders in said second and third groups

over a wiper of said allotter, means in said first allotter responsive to the initiation of a call by one of the first group lines for initiating the operation of a finder in either the first or third groups over a wiper of said first allotter, means in said second allotter responsive to the initiation of a call by one of the second group lines for initiating the operation of a finder in either the second or third group over a wiper in the second allotter, and means in the finders in the third group for simultaneously testing a plurality of said lines when hunting for a calling line.

7. In a telephone system, a group of subscribers' lines, a group of finders, each finder thereof having access to all the lines in said group, said group of lines divided into two subgroups, a second group of finders and each finder thereof having access to only the lines in one subgroup, a third group of finders and each finder thereof having access to only the lines in the other subgroup, a step-by-step allotter having wipers for selecting idle finders in said first and second groups, a second step-by-step allotter having wipers for selecting idle finders in said first and third groups, and means in either of said allotters responsive to the initiation of a call by a line in said group for initiating the operation of an idle finder over a wiper of the first allotter in case said calling line is in the first subgroup or for initiating the operation of an idle finder over a wiper of the second allotter in case said calling line is in the second subgroup.

8. In a telephone system, lines, test contacts for said lines, a finder, wipers on said finder having access to the contacts of said lines, a stepping magnet in said finder for operating said wipers, a stepping relay in said finder, an allotter having wipers for selecting said finder if idle, means for initially operating said relay over a wiper of said allotter, means controlled by the operation of said relay for operating said magnet to step said finder wipers to simultaneously test a plurality of said lines over said contacts, and said relay thereafter intermittently operated over said allotter wiper dependent upon the absence of a predetermined potential on the test contacts of the lines being simultaneously tested.

9. In a telephone system, a finder, lines accessible to said finder, an allotter having wipers for selecting said finder if idle, a shunt-field relay in said finder, a circuit for initially energizing said relay over a wiper of said allotter, a stepping magnet in said finder energized responsive to the energization of said relay, said magnet having means for operating said finder and for deenergizing said relay, and means in said finder for thereafter simultaneously testing a plurality of said lines and for thereafter controlling the intermittent energizations of said relay in response to the operation of said finder.

10. In a two-directional finder combined with a selector, the combination of a test wiper in the finder, a release magnet and circuit therefor in said selector, and a change-over relay in said finder having contacts for controlling the change over from one direction of motion to the other, for connecting guarding potential to said wiper, and for opening said circuit.

11. In a step-by-step finder combined with a step-by-step numerical switch, of a stepping magnet in said finder, of a stepping magnet in said switch, of a stepping relay in said finder, and circuits controlled by said relay for first intermittently operating the magnet of said finder to operate the same step-by-step and for later intermittently operating the magnet of the switch to operate the same step-by-step.

12. In a telephone system, a finder having a plurality of sets of wipers for controlling the hunting operation thereof, lines, each line terminating in a bank contact set in the finder, means for selecting one of said sets of wipers prior to the hunting operation of the finder, means for operating all said wipers during the hunting operation, said plurality of sets of wipers thereby simultaneously engaging corresponding sets of bank contacts, and means controlled solely over said selected set of wipers for controlling the said hunting operation.

13. In a telephone system, a group of lines, a corresponding group of finders normally serving said group of lines as long as an idle finder thereof is available, a second group of lines, a corresponding second group of finders normally serving said second group of lines as long as an idle finder thereof is available, a third group of finders, a first and a second set of wipers in each finder of the third group, said first set having access to lines in the first group and said second set having access to lines in the second group, and means for controlling the finders in the third group over the set of wipers corresponding to the group of lines in which a call originates when the finders of such corresponding group are unavailable.

14. In a telephone system, a group of lines, a corresponding group of finders normally serving said group of lines as long as an idle finder thereof is available, a second group of lines, a corresponding second group of finders normally serving said second group of lines as long as an idle finder thereof is available, a third group of finders for serving said groups of lines when the finders of their corresponding groups are unavailable, a first and a second primary test wiper in each finder of the third group for controlling the primary movements of the finders, means for selecting one of said wipers of a third group finder

prior to the hunting operation of such finder in response to a call by a line in one of said groups when the corresponding finders of the calling group are unavailable, and the wiper selected being dependent upon the group of lines in which the call originates.

15. In a telephone system, a group of lines, a corresponding group of finders normally serving said group of lines as long as an idle finder thereof is available, a second group of lines, a second group of finders serving both groups of lines, a first and a second set of wipers in each finder of the second group, said first set having access to lines in the first group and said second set having access to lines in the second group, means for operating all the wipers of a second group finder to simultaneously engage a plurality of lines in said groups during its hunting operation, and means for controlling the finders in the second group solely over the first set of wipers in case a call originates in the first group of lines when the finders of the first group are unavailable and for controlling the finders in the second group solely over the second set of wipers in case a call originates in the second group of lines.

16. In a telephone system, a group of lines, a group of finders normally serving said group of lines as long as an idle finder thereof is available, a second group of lines, a second group of finders serving both groups of lines, a first and a second set of wipers in each finder of the second group, said first set having access to lines in the first group and said second set having access to lines in the second group, means for operating all the wipers of a second group finder to simultaneously engage a plurality of lines in said groups during its hunting operation, means for selecting a first set of wipers of a second group finder prior to its hunting operation in case a call originates in the first group of lines when all the finders of the first group are unavailable and for selecting a second set of wipers of a second group finder in case the call originates in the second group of lines, and means for controlling the hunting operation of said finder solely over the selected wiper set.

17. In a telephone system, a first group of lines having a primary test contact for each subgroup of lines therein, a group of finders having access to said contacts for controlling their primary movement, a second group of lines having a primary test contact for each subgroup of lines therein, a second group of finders having access to said second primary contacts for controlling their primary movement, a third group of finders having a primary movement, primary test contacts for said third group finders normally disconnected from the primary test contacts of the first and second groups, means responsive to a call in said first group of lines when all the finders of the first group are unavailable for connecting the primary test contacts of the first group finders to the primary test contacts of the third group finders to control the primary movement of the third group finders, and means responsive to a call in said second group of lines when all the finders of the second group are unavailable for connecting the primary test contacts of the second group finders to the primary test contacts of the third group finders to control the primary movement of the third group finders.

18. In a telephone system, a first group of lines having a primary test contact for each subgroup of lines therein, a group of finders having access to said contacts for controlling their primary movement, a second group of lines having a primary test contact for each subgroup of lines therein, a second group of finders having access to said second primary contacts for controlling their primary movement, a third group of finders having a primary movement, primary test contacts for said third group finders normally disconnected from the primary test contacts of the first and second groups, means responsive to a call in said first group of lines when all the finders of the first group are unavailable for connecting the primary test contacts of the first group finders to the primary test contacts of the third group finders to control the primary movement of the third group finders, means responsive to a call in said second group of lines when all the finders of the second group are unavailable for connecting the primary test contacts of the second group finders to the primary test contacts of the third group finders to control the primary movement of the third group finders, and means operative after the initiation of a finder in the third group for maintaining the interconnection of said primary test contacts until the calling line is found independently of whether finders in the first or second groups in the interim become available.

19. In a telephone system, a first group of lines having a primary test contact for each subgroup of lines therein, a group of finders having access to said contacts for controlling their primary movement, a second group of lines having a primary test contact for each subgroup of lines therein, a second group of finders having access to said second primary contacts for controlling their primary movement, a third group of finders having a primary movement, primary test contacts for said third group finders normally disconnected from the primary test contacts of the first and second groups, means responsive to a call in said first group of lines when all the finders of the first group are unavailable for connecting the primary test contacts of the first group finders to the primary test contacts of the third group finders to control

the primary movement of the third group finders, means responsive to a call in said second group of lines when all the finders of the second group are unavailable for connecting the primary test contacts of the second group finders to the primary test contacts of the third group finders to control the primary movement of the third group finders, and means for preventing the interconnection of the primary test contacts of the third group finders with the primary test contacts of the second group finders during the time the primary test contacts of the first group finders are connected to the primary test contacts of the third group finders.

20. In a telephone system, a group of lines divided into two subgroups, a first group of finders for said first subgroup of lines, a second group of finders for the second subgroup of lines, a third group of finders for both subgroups of lines, a first allotter having access to the finders in the first and third groups, a second allotter having access to the finders in the second and third groups, wipers in said allotters for preselecting idle finders in the third group only in case no idle finders are available in their respective first and second groups, means thereafter responsive to a call in said group of lines for initiating the operation of a preselected finder in the third group over a wiper of either of said allotters, and means operative with the initiation of such finder for maintaining such finder in use until the calling line is found independently of whether finders in the first or second groups in the interim become available.

21. In a telephone system, a group of lines divided into two subgroups, a first group of finders normally serving said first subgroup of lines, a second group of finders normally serving the second subgroup of lines, a third group of finders for serving both subgroups of lines when either the first or second groups become busy, a first allotter having access to the finders in the first and third groups, a second allotter having access to the finders in the second and third groups, wipers in said allotters for selecting idle finders in the third group only in case no idle finders are available in their respective first and second groups, a stepping magnet in each allotter for operating said wipers, and an operating circuit for each magnet extending over a wiper of the corresponding allotter when a finder is available in its respective first or second groups and over another wiper of the corresponding allotter when said third group of finders are in use.

In testimony whereof I affix my signature.

CHARLES GILLINGS.