Oct. 11, 1932. J. H. LANGROCK 1,881,704

TROUSERS SUPPORT

Filed Jan. 21, 1932 2 Sheets-Sheet 1

Fig. 1.

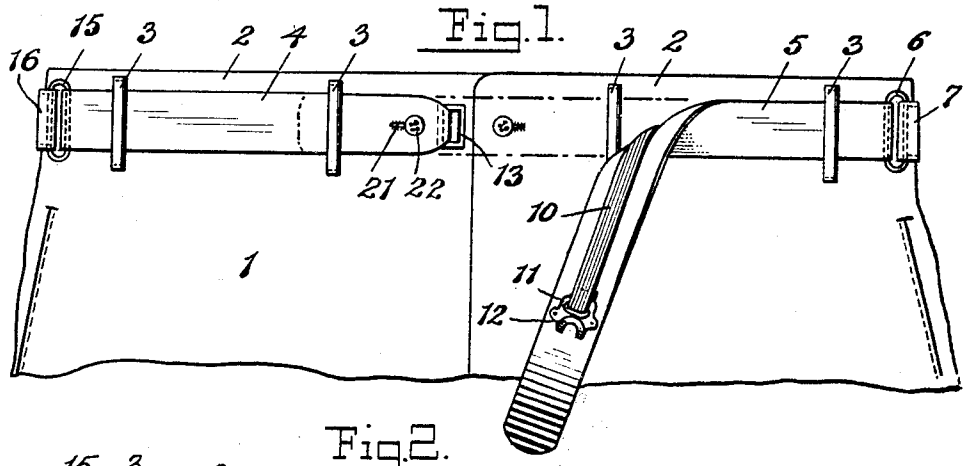

Fig. 2.

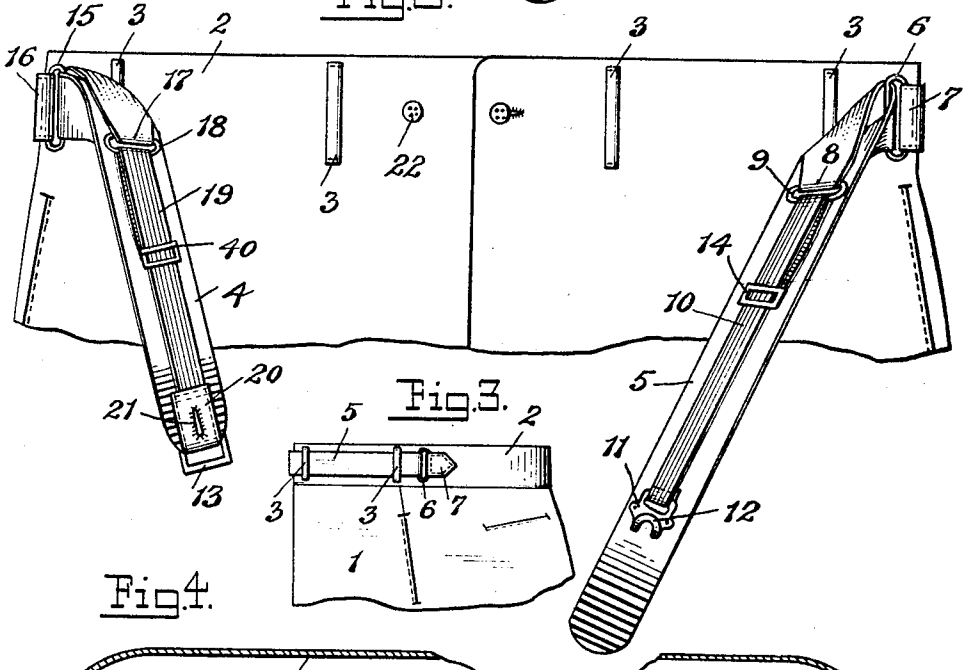

Fig. 3.

Fig. 4.

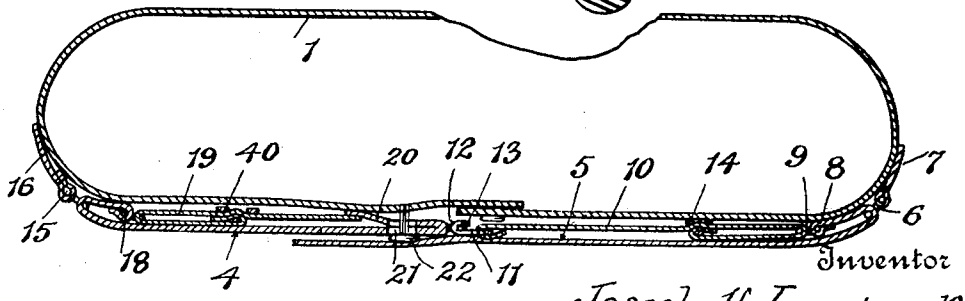

Inventor

Joseph H. Langrock

By his Attorney

Harry Radzinsky

Oct. 11, 1932. J. H. LANGROCK 1,881,704

TROUSERS SUPPORT

Filed Jan. 21, 1932 2 Sheets-Sheet 2

Fig. 5.

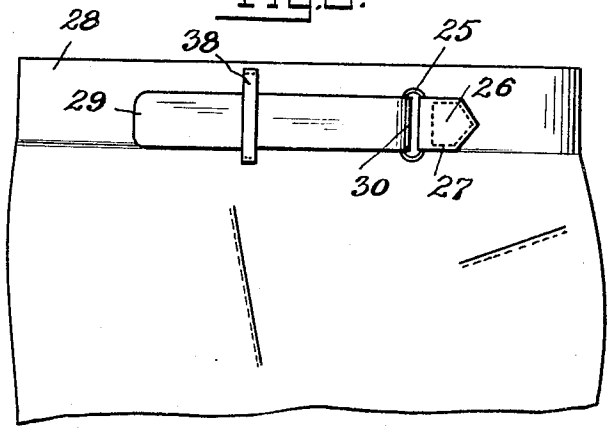

Fig. 6.

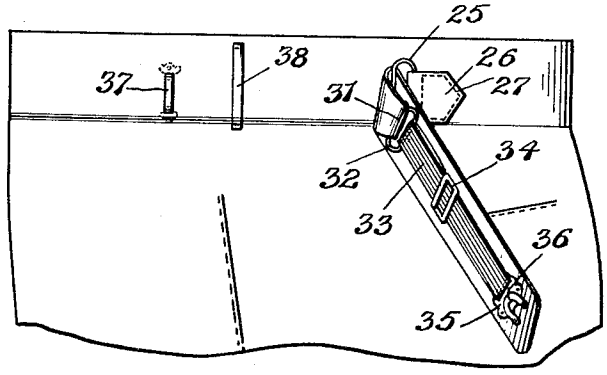

Fig. 7.

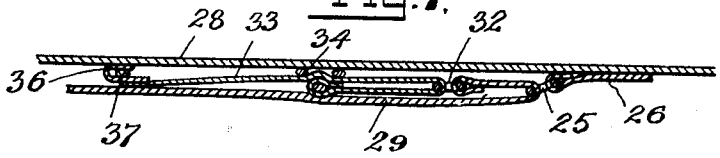

Inventor

Joseph H. Langrock

By his Attorney

Harry Radzinsky

Patented Oct. 11, 1932 1,881,704

UNITED STATES PATENT OFFICE

JOSEPH H. LANGROCK, OF NEW HAVEN, CONNECTICUT

TROUSERS SUPPORT

Application filed January 21, 1932. Serial No. 587,852.

This invention relates particularly to a means for supporting the trousers and obviating the use of suspenders, belts or other of the usual trousers supporting means. Various structures for supporting trousers have been proposed in the past but have met with no great success for many reasons. Primarily among such reasons is that the proposed supports have either been found uncomfortable to wear or have so detracted from the appearance of the garment that they met with no success.

The purpose of this invention is to provide a trousers supporting means which will not only enhance the appearance of the garment but will obviate the use of such uncomfortable supporting means as a leather belt, suspenders or the like.

The trousers supporting means comprising my invention is one which may be attached to the garment in the process of manufacturing the same and thus may form an integral part of the garment. It may, however, be a supplemental attachment in cases where such a construction is preferred. The means for supporting the trousers, which consists primarily of an elastic strap or member, is so disposed with relation to the rest of the garment that the same is substantially invisible when worn.

These and other objects are accomplished by my invention, several embodiments of which are disclosed in the accompanying drawings, in which Fig. 1 is a front elevation of the upper portion or waist band of a pair of trousers showing my improved trousers supporting means fitted thereto with one of the supporting strap members folded back to disclose the elastic band construction; Fig. 2 is a similar view, except that both of the band members are folded back; Fig. 3 is a side elevation of the upper portion of a pair of trousers showing how the supporting means appears when in use; Fig. 4 is a longitudinal sectional view through the waist band of a pair of trousers and through the trousers supporting means fitted thereon; Fig. 5 is a side elevation of the waist band portion of a pair of trousers showing a trousers supporting strap fitted at one side of the waist band or over the hips; Fig. 6 is a view of the structure shown in Fig. 5 with the strap folded back to disclose construction; and Fig. 7 is a longitudinal sectional view through the trousers supporting means shown in Figs. 5 and 6.

In the embodiment of my invention disclosed in Figs. 1 to 4 inclusive, 1 indicates the body of a pair of trousers which is provided with the usual waist band portion 2. Conventional belt supporting loops are provided on the waist band at 3. The trousers supporting means shown in Figs. 1 to 4 inclusive is composed of two separate inelastic or cloth straps or belt portions 4 and 5. The part 5 is attached to the waist band of the garment by being doubled through a ring or loop member 6 which is fixed to a tab 7 stitched on the garment waist band. The end of the strap member 5 that is doubled through the loop or ring 6 is shown at 8 and the same is secured to a loop member 9.

An elastic band or strap 10 has one of its ends extending through the loop 9 and has its opposite end secured to a plate 11 which is attached to the inner face of the strap 5. The plate 11 is provided with a hook portion 12 adapted to detachably engage with a loop or buckle member 13 secured to the free end of the strap member 4. The elastic band 10 is longitudinally adjustable in the conventional manner by means of a buckle 14.

The strap member 4 is doubled through a loop 15 which is attached to a tab 16 stitched to the outer face of the garment on the waist band. The end of the strap 4 which passes through the loop 15 is shown at 17 and the same is secured to a loop 18 which engages with the end of an elastic strap 19. This elastic strap 19 is longitudinally adjustable by means of the usual buckle 40. The opposite end of this strap 19 is sewed to the inner face of the strap 4 and is securely held in place by the stitched reinforcement 20. A button-hole 21 extends through the strap 4 near its end and also passes through the reinforcement 20 as clearly shown in Fig. 2. This button-hole is adapted to engage with a button 22 secured on the outer face of the waist band 2 of the garment.

From the foregoing the manner in which

the device is used will be readily understood. The elastic straps 10 and 19 are adjusted to the required extent to cause the straps 4 and 5 to snugly hold the garment about the waist of the wearer. The adjustment of the straps 10 and 19 serves to regulate the effective length of the straps 4 and 5 by drawing the same for the required extent through their respective loops 6 and 15. The straps 4 and 5 are passed through the belt loops 3 in the customary manner, the button-hole 21 on the strap 4 engaging with the button 22. The hook 12 on the plate 11 which is located on the inner face of the strap 5 detachably engages with the loop 13 on the strap 4 to connect together the two ends of the respective straps 4 and 5. When the two straps are thus connected the means for holding said straps snugly about the wearer, consisting of the two narrow elastic members 10 and 19, are completely covered by their respective strap members 4 and 5 and are thus invisible. These elastic members are very easily adjustable and serve to apply the requisite tension upon the supporting straps 4 and 5 to cause the same to easily support the garment. It is found desirable to make the straps 4 and 5 of cloth or other relatively inelastic fabric to match the body of the trousers, although, of course, a contrasting fabric may be used if desired.

In the embodiment of my invention disclosed in Figs. 5 to 7 inclusive, the trousers supporting means is positioned at the opposite sides, or over the hips of the wearer. Here is shown a ring or loop member 25 attached to a tab 26 which is stitched at 27 to the waist band 28 of the garment. A supporting strap 29 is doubled through the loop 25 as at 30, the infolded end 31 thereon being attached to a loop 32. This loop 32 engages with the end of an elastic band 33 which is adjustable by the buckle 34 in the manner previously described. The opposite end of the elastic band 33 is secured to a plate 35 which is stitched to the inner face of the strap 29, and which is provided with a hook porton 36 adapted to detachably engage with a loop member 37 secured on the waist band 28 of the garment. To use this particular embodiment of my invention the elastic strap 33 is regulated by adjustment of the buckle 34 until the strap 29 is drawn through the loop 35 to the required extent whereupon the strap is passed through the belt loop 38 and the hook member 36 is engaged with the loop 37.

It will be understood that the structure shown in Figs. 5 to 7 inclusive is located at both sides of the garment. It may likewise be located at the back of the garment, or at any suitable position on the waist band where the same will satisfactorily function to support the garment.

What I claim is:—

1. A trousers support having an inelastic strap portion adapted to overlie a garment waist band and doubled upon itself adjacent one of its ends, a loop member secured to the garment waist band on the outside of the garment for receiving the doubled end of the strap portion and through which said strap portion is adjustable, an elastic strap having one of its ends secured to the doubled end of the inelastic strap and having its other end attached near the free end of the inelastic strap, the elastic strap being located between the inelastic strap and the face of the garment and concealed from external view, means for adjusting the effective length of the elastic strap and means for detachably securing the free end of the inelastic strap to the face of the garment waist band.

2. A trousers support provided with a loop located on the waist band of a garment, a strap member extending into the loop and adjustable therethrough, an adjustable elastic strap secured to the end of the strap member which extends through the loop, means for attaching one end of said elastic strap to the inner face of the strap member, and means for detachably connecting the free end of the strap member to the garment waist band.

3. A trousers support having a loop member secured on the trouser waist band, a cloth strap doubled therethrough, an adjustable elastic strap connected to the opposite ends of the cloth strap and concealed from external view by the cloth strap, and means for detachably securing one end of the cloth strap to the garment.

4. A trousers support consisting of a pair of cloth straps brought to overlap at the front of the garment, means for securing one end of one of said straps to the garment waist band, means on said strap for detachably engaging with the other strap, a loop for each of said straps through which each of the same is doubled, and an adjustable elastic band carried at the back of each of said straps and concealed from view thereby and means for adjusting the length of the elastic bands to regulate the effective length of the cloth straps.

5. A trousers support having a loop secured to the trousers waist-band, an inelastic strap doubled through the loop and having a free end, an adjustable elastic band carried at the back of said strap and concealed from view thereby, and means for adjusting the length of said elastic band to regulate the effective length of the inelastic strap and means for attaching the free end of the strap to the garment waist band.

6. A trousers support comprising an inelastic cloth strap, a fixed loop attached to the face of a trousers waist band, the strap having one of its ends adjustable through

said loop, an elastic strap having one of its ends secured to one of the faces of the inelastic strap near the free end of said inelastic strap and having its other end adjustably connected to the end of the inelastic strap that has been passed through the loop, and means held on the face of the waist band for detachably engaging the free end of the inelastic strap.

Signed at the city of New Haven, county of New Haven and State of Conn., this 19th day of January, 1932.

JOSEPH H. LANGROCK.