United States Patent [19]

Rubin

[11] **3,740,849**

[45] **June 26, 1973**

[54] **ORTHODONTIC BRACKET**

[76] Inventor: **James M. Rubin,** 141 W. 17th Street, New York, N.Y. 10011

[22] Filed: **Sept. 20, 1971**

[21] Appl. No.: **181,917**

[52] **U.S. Cl.** ..... **32/14 A**
[51] **Int. Cl.** **A61c 7/00**
[58] **Field of Search** ..... 32/14 A

[56] **References Cited**

UNITED STATES PATENTS

3,374,542 3/1968 Moylan ..... 32/14 A

3,543,404 12/1970 Rubin ..... 32/14 A

Primary Examiner—Robert Peshock
Attorney—James K. Silbermann, Alex Friedman et al.

[57] **ABSTRACT**

An improved orthodontic bracket for mounting to a tooth band and for receiving an arch wire wherein the bracket is formed of sheet material and the arch wire may readily be clamped in and removed from the bracket.

8 Claims, 10 Drawing Figures

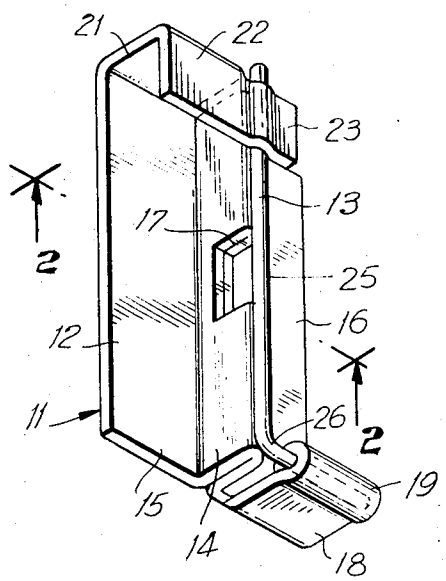

PATENTED JUN 26 1973

3,740,849

SHEET 1 OF 2

FIG. 1

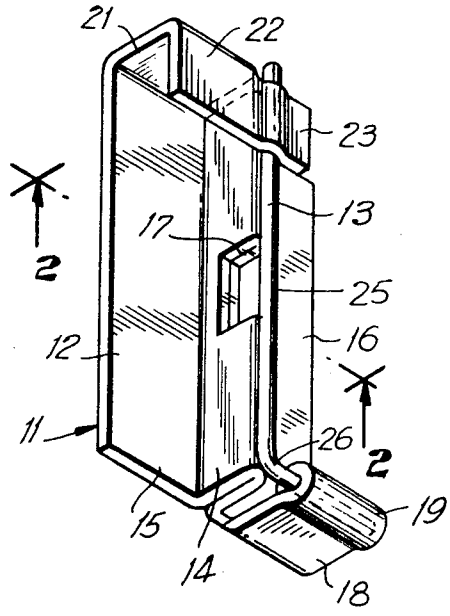

FIG. 3

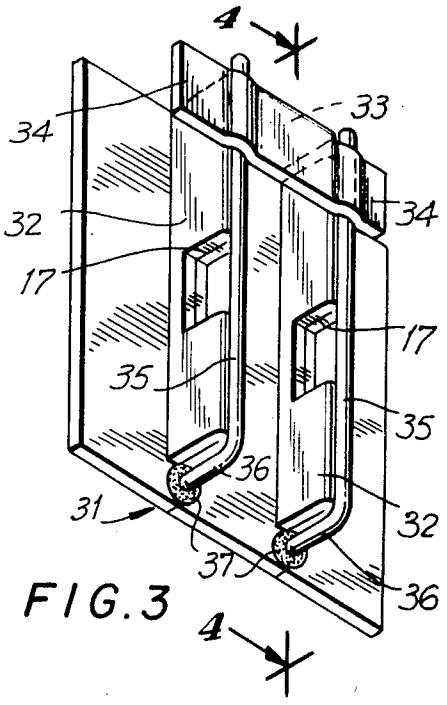

FIG. 2

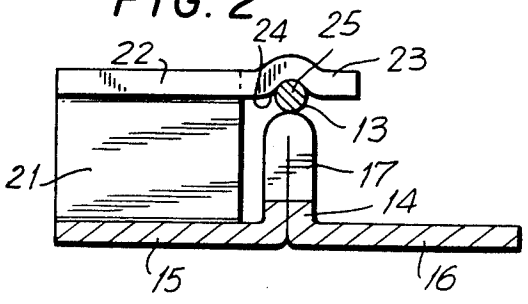

FIG. 5

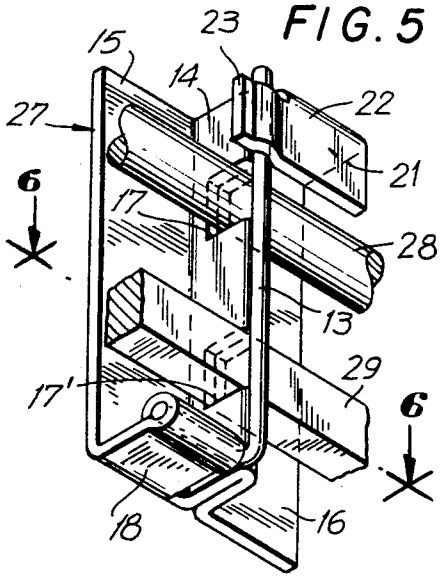

FIG. 4

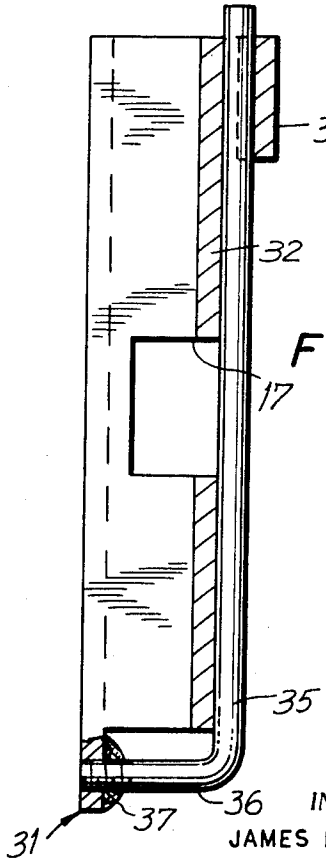

INVENTOR.
JAMES M. RUBIN

BY

Blum, Moscovitz, Friedman & Kaplan

ATTORNEYS

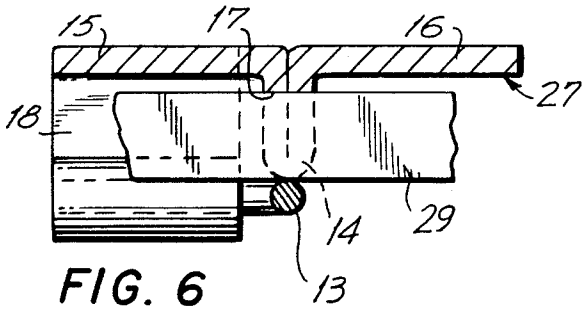

FIG. 6

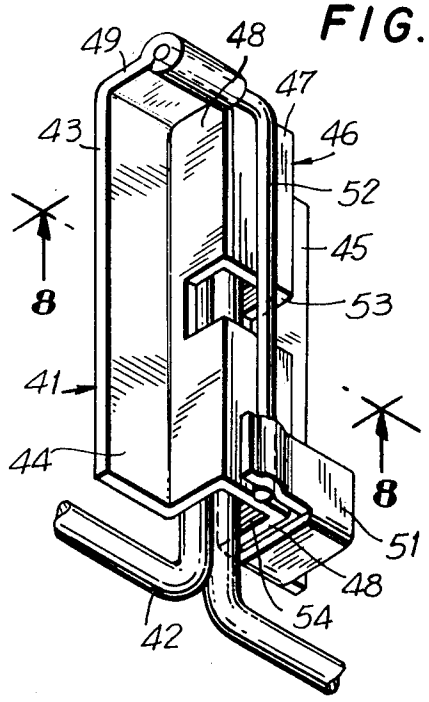

FIG. 7

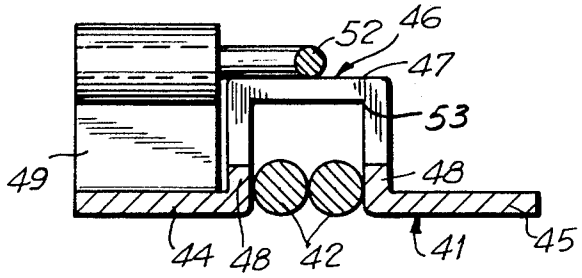

FIG. 8

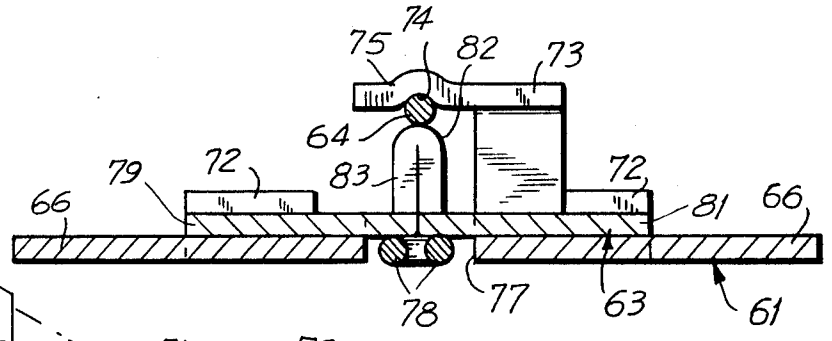

FIG. 10

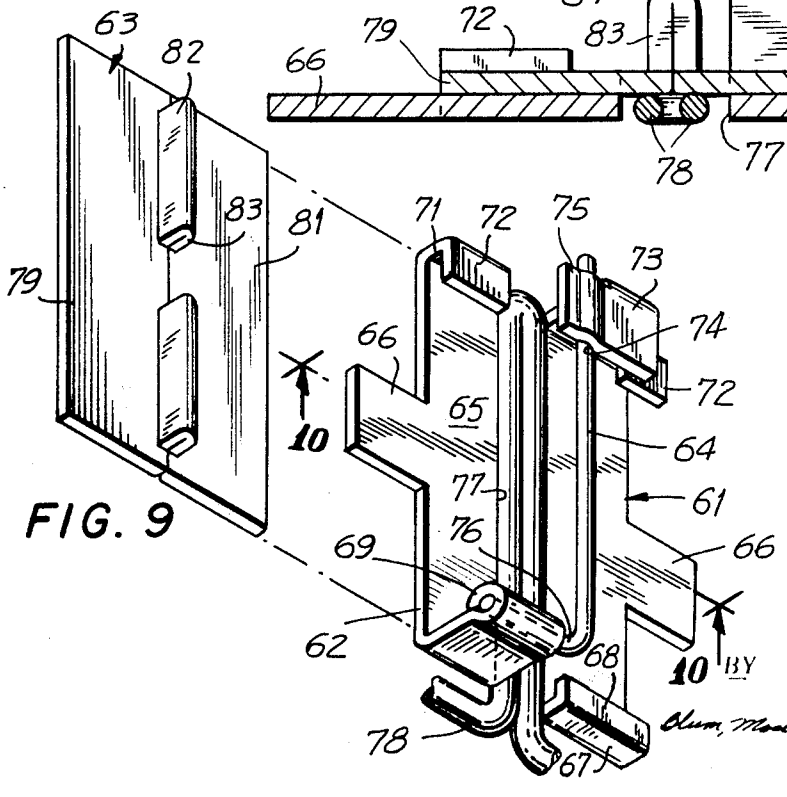

FIG. 9

INVENTOR.
JAMES M. RUBIN

BY

Blum, Moscovitz, Friedman & Kaplan
ATTORNEYS

ORTHODONTIC BRACKET

BACKGROUND OF THE INVENTION

This invention relates generally to an improved orthodontic bracket. The art of orthodontic brackets is well developed based on the continuing goal of making brackets more versatile, easier to fabricate, simpler to use, more reliable and less expensive. Great difficulties are encountered in the development of orthodontic brackets and orthodontic appliances generally because of parameters of size and use. Orthodontic brackets are extremely small structures designed to be worn in a patient's mouth with minimum discomfort. A bracket is attached to a band encircling a tooth and thus the mounting surface is also necessarily small. Due to the small size, it is extremely difficult to accurately fabricate brackets at a reasonable cost. The difficulties are further compounded by the material requirements for brackets. The brackets must be fabricated of a material which will not be attacked by the various acid and alkaline substances which pass through the oral cavity and must especially not be subject to attack by saliva which is present in the mouth at all times. In addition, the brackets must not be adversely affected by the abrasion to which they are subjected during cleaning and chewing. Stainless steel is most commonly used for orthodontic brackets and such material coupled with the small size of the brackets further compounds difficulty in fabrication.

SUMMARY OF THE INVENTION

Generally speaking, in accordance with the invention, an orthodontic bracket is formed of sheet material and is provided with means for receiving one or more arch wires with the bracket including means for releasably securing the arch wire in the bracket. The configuration of the bracket in its several embodiments and the securing means are designed with a view toward ease of fabrication and ease of use.

Accordingly, it is an object of this invention to provide an improved orthodontic bracket.

Another object of the invention is to provide improved orthodontic brackets which can be formed of sheet material.

A further object of the invention is to provide an improved orthodontic bracket which can be readily operated within the mouth of a patient with minimal discomfort to the patient.

Still other objects and advantages of the invention will in part be obvious and will in part be apparent from the specifications and drawings.

The invention accordingly comprises an article of manufacture possessing the features, properties, and the relation of elements which will be exemplified in the article hereinafter described, and the scope of the invention will be indicated in the claims.

BRIEF DESCRIPTION OF THE DRAWINGS

For a fuller understanding of the invention, reference is had to the following description taken in connection with the accompanying drawings, in which:

FIG. 1 is a perspective view of an orthodontic bracket constructed in accordance with a preferred embodiment of the instant invention;

FIG. 2 is a sectional view taken along line 2—2 of FIG. 1;

FIG. 3 is a perspective view of another embodiment of the instant invention;

FIG. 4 is a sectional view taken along line 4—4 of FIG. 3;

FIG. 5 is a perspective view of a further embodiment of the instant invention;

FIG. 6 is a sectional view taken along line 6—6 of FIG. 5;

FIG. 7 is a perspective view of still another embodiment of the instant invention;

FIG. 8 is a sectional view taken along line 8—8 of FIG. 7;

FIG. 9 is a perspective, exploded view of another embodiment of the instant invention; and

FIG. 10 is a sectional view taken along line 10—10 of FIG. 9 with the two part bracket shown in assembled condition.

DESCRIPTION OF THE PREFERRED EMBODIMENTS

Referring to FIGS. 1 and 2, a bracket indicated generally at 11 includes a base member 12 and a latch pin 13. Base member 12 is preferably formed of stainless steel sheet stock and is adapted to be welded to a tooth band (not shown) which encircles a tooth in the patient's mouth. Those in the art will understand that the bracket shown in FIG. 1 is many multiples of actual size.

Base member 12 is bent along three longitudinal axes to form a central wall 14 of double thickness, a left wing 15 and a right wing 16. An arch wire receiving cutout 17 is formed in central wall 14 for receiving an arch wire (not shown). The location of cutout 17 may be at any desired position along the length of central wall 14 and multiple cutouts may be provided for receiving multiple arch wires required by various orthodontic techniques.

The lower end, as viewed in FIG. 1 of base member 12 has a tab 18 extending upwardly from right wing 16 with the upper end of tab 18 being formed into the shape of a tube 19. The upper end of base member 12 includes an upwardly extending tab 21 from which extends an arm 22. Arm 22 is substantially parallel wings 15 and 16 and the outer end 23 thereof extends over central wall 14 and terminates in a position partly overlying right wing 16. Arm 22 is formed with a longitudinally extending indent 24 whose use will hereafter be evident.

Latch pin 13 is substantially L-shaped and includes an arch wire clamping portion 25 and a leg 26 extending substantially at right angles to arch wire clamping portion 25. Leg 26 is rotatably mounted in tube 19 with the arch wire clamping portion 25 in intimate contact with the edge surface of central wall 14. Arch wire clamping portion 25 is sufficiently long to extend the full length of base member 12 so as to be received within indent 24 with outer end 23 of arm 22 biasing the arch wire clamping portion against the edge of central wall 14 to retain latch pin 13 in the latched position shown in FIGS. 1 and 2.

The manner of use of bracket 11 can now be understood. With base member 12 welded to a tooth band mounted on a tooth within the patient's mouth, an arch wire can easily be mounted in or removed from cutout 17. By deflecting the free end of latch pin 13 out of the FIG. 1 position, the latch pin becomes free to rotate within tube 19 to permit access to cutout 17. With the

arch wire properly in place, the latch pin 13 can be reseated in the FIG. 1 position by slight deflection of outer end 23.

A problem experienced by orthodontists during the treatment period is the breakage of brackets requiring time consuming replacement and attendant discomfort to the patient. With the bracket of FIG. 1, if the latch pin 13 should fail from repeated bending during latching required by adjustments of the arch wire during the treatment period, latch pin 13 can be readily replaced merely by unlatching it from arm 22 and sliding it out of tube 19. Such a task can be done with facility without the necessity of replacing the entire bracket 11. While latch pin 13 may be readily removed, the clamping action imparted by arm 22 will assure that it does not become dislodged when in the operative FIG. 1 position while applying a holding force to an arch wire mounted in cutout 17.

An alternate form of a bracket 31 is shown in FIGS. 3 and 4 wherein the bracket is formed with two central walls 32 each having a cutout 17. The top end of bracket 31 includes a tab 33 from which extends two arms 34 for receiving two latch pins 35. Each latch pin includes a leg 36 threaded for swiveling in a hump 37 carried by the bracket in line with an associated one of central walls 32.

Latching and unlatching of an arch wire (not shown) received in cutouts 17 may be accomplished in the same manner as described in connection with FIGS. 1 and 2. If either one of the latch pins 35 should fail, it can be readily removed and a new one threaded into the hump 37 and held down by the associated arm 34.

A slightly modified embodiment as respects FIG. 1 is disclosed in FIGS. 5 and 6. The embodiment of FIGS. 5 and 6 differs with respect to FIG. 1 in that the positions of tab 18 and arm 22 are reversed as respects their positions in FIG. 1. The primary difference in the FIG. 5 embodiment is that two arch wire receiving cutouts 17, 17′ are provided in central wall 14. By way of example, an arch wire 28 having a circular cross section is shown secured in cutout 17 while an arch wire 29 having a rectangular cross section is shown mounted in cutout 17′. Arch wires 28 and 29 are mounted in and removed from the bracket 27 of FIGS. 5 and 6 in the same manner as described in connection with FIGS. 1 and 2.

Referring now to FIGS. 7 and 8, a bracket 41 is formed to include means for receiving a spring 42. In orthodontic technique, springs or spring wires are used to apply corrective forces in selected directions by engagement with the arch wire. Bracket 41 is formed of sheet material and includes a base member 43 having a left wing 44 and a right wing 45 separated by a central channel 46. Central channel 46 is formed with a generally planar base 47 and spaced legs 48. Bracket 41 also includes a tab 49 and an arm 51 similar in construction to the tab and arm of the FIG. 1 embodiment. A latch pin 52 extends between tab 49 and arm 51 in the manner previously described in connection with FIG. 1 with the latch pin 52 overlying an arch wire receiving cutout 53 formed in base 47 and legs 48. Legs 48 are spaced, one from the other to define a spring receiving slot 54 for receiving a folded over portion of spring 42. With bracket 46 as shown in FIGS. 7 and 8, a spring may be selectively inserted in spring receiving slot 54 and will be removably retained therein by engagement between the spring and the walls defined by legs 48.

Referring to FIGS. 9 and 10, a bracket having a two part base member is shown. Bracket 61 is composed of a channel member 62, a block member 63 and a latch pin 64. Channel member 62 is formed of sheet material and includes a base 65 which would be welded to a tooth band utilizing tongues 66, if desired. At one end, base 65 is formed with an upstanding wall 67 formed with an inturned lip 68 and a tube 69. At the other end, base 65 is formed with an upstanding wall 71, inturned lips 72 and an arm 73 having an indent 74 and an arch wire clamping portion 75. Latch pin 64 is provided with a leg 76 which is pivoted in tube 69 for operation in a manner heretofore described.

Channel member 62 may also be provided with a slot 77 for removably receiving a spring 78.

Block member 63 is formed of sheet material and includes a left wing 79 and a right wing 81 extending outwardly from the generally centrally located central wall 82. Central wall 82 is divided at one or more preselected locations to form an arch wire receiving cutout 83. As shown in the exploded view of FIG. 9, block members 63 can be slidably mounted into channel member 62 and will be releasably held in position by means of lips 68 and 72. With block member 63 in the assembled position as seen in FIG. 10, central wall 82 underlies latch pin 64 whereby the bracket will function in a manner similar to the bracket disclosed in FIG. 1. However, if the orthodontic technique suggests a change in the location of the arch wire receiving cutout or a change in the number of arch wire receiving cutouts, utilization of the bracket shown in FIGS. 9 and 10 renders unnecessary the removal of the tooth band and bracket. With channel member 62 secured to the tooth band in place in the patient's mouth, it is only necessary to change the block member to one of desired configuration.

Several embodiments of orthodontic brackets have been disclosed herein for the purpose of showing only a few of the variety of brackets that can be fabricated utilizing the teachings of the instant invention. The invention is designed to permit fabrication of versatile brackets without excessive cost, which brackets can be readily manipulated in the patient's mouth with minimum discomfort to the patient. The embodiments disclosed also permit the replacement of certain parts that have a tendency to fail as compared with the totality of the bracket without requiring replacement of the entire bracket. One embodiment also permits the orthodontic technique to be changed without requiring replacement of the bracket.

It will thus be seen that the objects set forth above, among those made apparent from the preceding description, are efficiently attained and, since certain changes may be made in the above article without departing from the spirit and scope of the invention, it is intended that all matter contained in the above description and shown in the accompanying drawings shall be interpreted as illustrative and not in a limiting sense.

It is also to be understood that the following claims are intended to cover all of the generic and specific features of the invention herein described, and all statements of the scope of the invention which, as a matter of language, might be said to fall therebetween.

What is claimed is:

1. An orthodontic bracket comprising a base member formed of sheet material and at least one latch pin means, said base member including at least one up-

standing central wall, wings extending from said central wall, at least one arch wire receiving cut-out in said central wall, mounting means for said latch pin means and an overarm extending above said central wall transversely thereof, said latch pin means having a first end mounted in said mounting means and a second end releasably clamped between said central wall and said overarm the central portion of said latch pin means overlying said central wall for closing said arch wire receiving cut-out.

2. An orthodontic bracket as claimed in claim 1 wherein said latch pin means has a substantially uniform cross sectional dimension and said overarm is spaced from said central wall by an amount less than the cross sectional dimension of said latch pin means.

3. An orthodontic bracket as claimed in claim 2 wherein said overarm includes an indent for receiving therein said latch pin means for releasably retaining said latch pin in overlying relationship with said central wall.

4. An orthodontic bracket as claimed in claim 1 wherein said mounting means comprises a tab extending upwardly from one of said wings and a tube for receiving said first end of said latch pin means, the longitudinal axis of said tube being transverse said central wall.

5. An orthodontic bracket as claimed in claim 4 wherein said tube defines a pivot and said first end is pivoted in said tube.

6. An orthodontic bracket as claimed in claim 1 wherein said central wall has the cross sectional configuration of a downwardly opening channel with spaced legs for receiving a spring therein.

7. An orthodontic bracket as claimed in claim 1 wherein said base member comprises a channel member and a block member, said channel member including a base, said pivot means and said overarm, said block member including said wings, said central wall and said arch wire receiving cut-out, said block member being slidably received in said channel member, said channel member further including means for releasably retaining said block member therein.

8. An orthodontic bracket as claimed in claim 7 wherein said retaining means includes lips overlying said base in spaced relationship for engagement with said wings.

* * * * *