Sept. 8, 1931. W. D. KING 1,822,408

THERMALLY ACTUATED CIRCUIT CONTROLLER

Filed Nov. 28, 1927

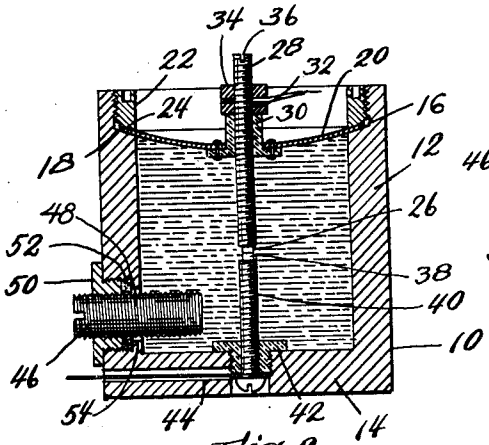

Fig. 2.

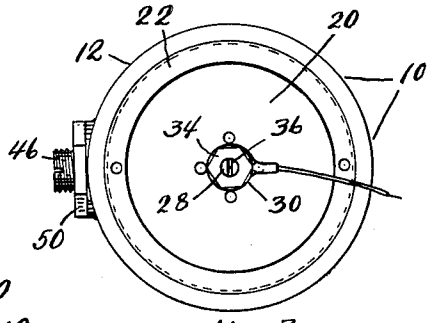

Fig. 3.

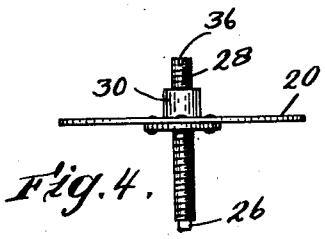

Fig. 4.

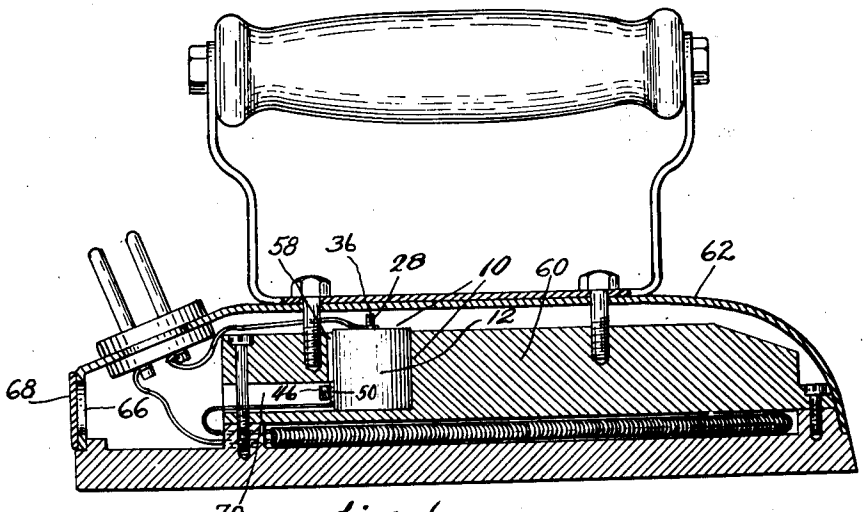

Fig. 1.

Inventor,
Warren D. King
by [illegible]
Atty

Patented Sept. 8, 1931 1,822,408

UNITED STATES PATENT OFFICE

WARREN D. KING, OF PEABODY, MASSACHUSETTS; LOUISE KING ADMINISTRATRIX OF SAID WARREN D. KING, DECEASED

THERMALLY-ACTUATED CIRCUIT-CONTROLLER

Application filed November 28, 1927. Serial No. 236,111.

This invention relates to thermally-actuated circuit controllers and especially to those having a thermally expansible fluid body which operates the controller.

The usual type of thermostatic circuit controller includes a pair of cooperating contact members which are separated to interrupt their circuit by the expansion of an expansible member due to the heating thereof. The rate of expansion is slow and, as a consequence, the contact members are moved apart slowly. A circuit-interrupting arc is thus drawn and maintained between the contact members for a considerable period of time which, at least, is long enough to cause burning and pitting of the contact surfaces, so that the electrical contact between the contact members becomes uncertain and frequent inspection and adjustment becomes necessary.

An object of this invention is the provision of a thermally-actuated circuit-controller wherein the separable contact members are immersed and the circuit-interrupting arc is drawn in a body of electrically insulating liquid which acts to quench the arc immediately upon the separation of the contact members under load, thus to keep the contact members cool and prevent deterioration of the contact surfaces, so that the controller can function for an indefinite period without attention.

A further object is the provision of a thermally-actuated circuit-controller having contact members which are separated by the thermal expansion of an expansible liquid which also constitutes the electrically insulating liquid in which the contact members are immersed and in which the circuit-interrupting arc is drawn.

A yet further object of the invention is the provision of a thermostatic circuit-controller of the expansible liquid type having means to vary the volume of the liquid-enclosing container, whereby to set the controller for operation at various degrees of temperature.

Another object is generally to improve the construction and operation of the thermally-actuated circuit-controllers.

Fig. 1 is a sectional elevation of an electrically-heated flat-iron with which the thermally-actuated circuit-controller embodying this invention is associated.

Fig. 2 is a sectional elevation through the thermally-actuated circuit-controller of Fig. 1.

Fig. 3 is a plan view of the controller of Fig. 2.

Fig. 4 is a side elevation of the flexible diaphragm and movable contact member of the thermally-actuated circuit-controller.

The thermally-actuated circuit-controller here shown as embodying the invention includes a casing 10 which has a top-opening and has a cylindrical side wall 12 and a flat bottom wall 14 integral with said side wall. Said walls are fluid impermeable and rigid and are composed of a good heat-conducting material, as steel, for instance. The top portion of the side wall 12 is provided with an internal annular recess 16 which is internally screw-threaded and terminates at the bottom in an annular seat 18 which is inclined slightly downward and inward toward the interior of the casing. A plane flexible disc or diaphragm 20 is seated on said seat 18 and is clamped securely thereon in fluid tight engagement with the casing by a clamping ring 22 which is externally screw-threaded and is secured into the annular recess 16 and against the upper face of the diaphragm. The lower annular face 24 of said clamping ring is formed to correspond with the seat 18 so that the diaphragm is flexed in the manner illustrated in Fig. 2 and thus applies substantial pressure to the separable contact members described below.

The diaphragm carries a movable contact member 26 which is located within the casing under the diaphragm and is fixed to the lower end of a screw-threaded rod 28 that is adjustably screw-threaded in an insulating bushing 30 extended through and fixed to the middle of said diaphragm in a fluid-tight manner. A check nut 32 is screw-threaded on said rod and bears against the upper end of said bushing to hold said rod in set adjustment and also to prevent leakage of fluid from the interior of the casing about the rod.

A second nut 34 serves to clamp a suitable circuit lead between it and the nut 32. The upper exposed end of the rod has a screw-driver slot 36 therein for rotating the rod to adjust the contact members.

Said movable contact member cooperates with a similar contact member 38 fixed to the upper end of a screw 40 which is screw-threaded into an insulating bushing 42 which has a fluid-tight screw-threaded connection with the bottom wall 14 of the casing. A second circuit lead is adapted to be clamped between the head of said screw 40 and said bushing and to be extended through an outwardly extended passage 44 in said bottom wall 14 to a point externally of the casing.

The internal volume of the casing can be varied by an adjusting screw 46 which is extended through a passage 48 in the side wall 12 of the casing, near the bottom thereof, and is adjustably screw-threaded in a bushing 50 which is screw-threaded in said passage. A packing material 52 is disposed between the inner end of said bushing and the annular ledge 54 located at the inner end of said passage to seal the passage against fluid leakage therethrough.

The casing is adapted to be filled with an electrically-insulating expansible liquid which does not give off a harmful amount of vapor at, or has a boiling point which is higher than, the elevated temperature at which the device is adapted to be operated. The particular device is here shown for interrupting the circuit of an electrically heated flat iron when the temperature thereof becomes excessive as, say, around 575° F. For this particular service, the expansible liquid can be a high boiling point mineral oil. For operation at lower temperatures, the same liquid can be employed or, if desirable, other suitable liquids, as lighter oils, can be used. In all cases, however, the expansible liquid is characterized by being electrically insulating so that when the contact members are separated under load, by the flexing of the diaphragm, the liquid occupies the space between the separated contact members and immediately extinguishes the circuit interrupting arc and prevents the passage of any material current through the circuit controlled by the contact members.

In adjusting the device for operation at some selected elevated temperature, the casing preferably is entirely filled with the liquid, so that it is in contact with the diaphragm. The adjusting screw is then backed out of the casing by an amount determined by experience or trial so that the oil level is lowered somewhat, or there is a small evacuated space above the oil and under the diaphragm or portions thereof. The oil can thus expand and fill the space without moving the diaphragm. On a further increase in temperature, however, the expanding oil acts with pressure on and forces the diaphragm outwardly and separates the contact members and the oil is effective in preventing continued arcing between the separated contact members. When the temperature falls, the oil contracts and the contact members again engage and are pressed forcibly together due to the tension on the diaphragm.

The device herein illustrated is especially adapted for use in an electric iron, to prevent the overheating thereof and is received in a well 58 in the body 60 of the iron, under the cover 62, and is in series with the heater element 64 and is adapted to be heated thereby. It is apparent that an excessive rise in temperature will cause the actuation of the circuit-controller and interrupt the circuit of the heater element and also will automatically close the circuit when the temperature falls to some lower value, thus automatically maintaining the temperature of the iron between certain upper and lower limits.

The temperature-adjusting screw 46 is accessible by a screw driver inserted through an aperture 66 in the cover covered by a plate 68, which may be a name-plate, and a passage 70 in the body of the iron. The device thus can be adjusted while it is in place in the iron.

The device may be otherwise arranged without departing from the spirit of the invention.

I claim:

1. A thermally-actuated circuit controller including separable contact members, a diaphragm for operating said contact members, a casing enclosing said contact members, and an electrically-insulating thermally-expansible liquid in which said contact members are immersed, which liquid when hot completely fills said casing and forcibly expands directly against said diaphragm and moves it to operate said contact members.

2. A thermally-actuated circuit-controller having a thermally-expansible, electrically-insulating liquid, separable contact members immersed in said liquid, and means responsive directly to the expansion of said liquid, when heated, to operate said contact members.

3. A thermally-actuated circuit-controller having a body of thermally-expansible liquid which has a boiling point higher than the highest temperature to which the controller is adapted to be subjected, contact members separable beneath said liquid by the expansion thereof, and means responsive directly to the expansion of said liquid, when heated, to operate said contact members.

4. A thermally-actuated circuit-controller having a receptacle adapted to be completely filled with an expansible liquid when it is hot, contact members disposed within said receptacle and separable within said liquid,

and operating mechanism for said contact members operated directly by expansion of said liquid.

5. A thermally-actuated circuit controller including separable contact members, operating mechanism therefor including a liquid-actuated member, and means to operate said contact members including an insulating thermally-expansible liquid in which said contact members are immersed and which forcibly expands directly against said liquid-actuated member and moves it forcibly to operate said contact members.

6. A thermally-actuated circuit-controller comprising an enclosing casing adapted to be completely filled with an expansible liquid when it is hot, a diaphragm carrried by said casing adapted to be moved directly by the expansion of said liquid, and contact members operated by said diaphragm and separable in said expansible liquid in said casing.

7. A thermally-actuated circuit controller having a casing adapted to be completely filled with an expansible liquid when it is hot, said casing having a wall which is moved directly by the expansion of said liquid, co-operating contact members separable in said liquid and operated by said expansible wall, and means to vary the volume of said casing including a member movable in and out of said casing.

8. A thermally-actuated circuit controller including separable contact members, a casing enclosing said contact members having a diaphragm for operating said contact members which has its inner face open to the interior of the casing and its outer face open to the atmosphere, and an electrically-insulating thermally-expansible liquid having a high boiling point contained in said casing and in which said contact members are immersed, said liquid when hot completely filling said casing and forcibly expanding directly against said diaphragm to force it outwardly and separate said contact members and when cold incompletely filling said casing so that there is a vacuum within said casing whereby atmospheric pressure acts on said diaphragm to hold said contact members forcibly in engagement.

9. A thermally-actuated circuit control for a heat conducting body having a well therein and an electrical heating element associated therewith to heat it, comprising an expansible-fluid containing casing received in said well having separable contact members immersed in the fluid and actuated by the expansion thereof, said casing having a laterally extended adjusting member received in a passage in said heated body communicating with said well, and a cover for said body and casing having an opening therethrough in register with the entrance to said passage.

10. A thermally-actuated circuit controller including separable contact members, a casing enclosing said contact members having a diaphragm for operating said contact members which has its inner face open to the interior of the casing and its outer face open to the atmosphere, an electrically-insulating thermally-expansible liquid having a high boiling point contained in said casing and in which said contact members are immersed, said liquid when hot completely filling said casing and forcibly expanding directly against said diaphragm to force it outwardly and separate said contact members and when cold incompletely filling said casing so that there is a vacuum within said casing whereby atmospheric pressure acts on said diaphragm to hold said contact members forcibly in engagement, and means to vary the amount of expansion of the liquid prior to completely filling the casing, including means to vary the volume of the casing.

In testimony whereof, I have signed my name to this specification.

WARREN D. KING.