US 20020057976A1

(19) United States

(12) Patent Application Publication (10) Pub. No.: US 2002/0057976 A1

Kimura et al. (43) Pub. Date: May 16, 2002

(54) SCROLL FLUID MACHINE

(76) Inventors: **Hideyuki Kimura**, Kanagawa-ken (JP); **Atsushi Unami**, Kanagawa-ken (JP)

Correspondence Address:
CROWELL & MORING LLP
INTELLECTUAL PROPERTY GROUP
P.O. BOX 14300
WASHINGTON, DC 20044-4300 (US)

(21) Appl. No.: **09/983,017**

(22) Filed: **Oct. 22, 2001**

(30) **Foreign Application Priority Data**

Oct. 20, 2000 (JP) 2000-322025

Publication Classification

(51) **Int. Cl.**[7] **F01C 11/00**; F01C 1/04; F01C 19/08

(52) **U.S. Cl.** **418/55.2**; 418/55.4; 418/5

(57) **ABSTRACT**

To offer the seal configuration which prevents the leakage of high pressure compressed fluid from the succeeding stage compression section to the preceding stage compression section of a multistage compression type fluid machine, a seal element **25** is located on the rand **9***a* between the discharge port **2***e* located at the end of the spiral lap groove of the preceding stage compression section and the suction port **2***f* located at the start of the spiral lap groove of the succeeding stage compression section to suck in the compressed fluid discharged from said discharge port and cooled through passing a cooler.

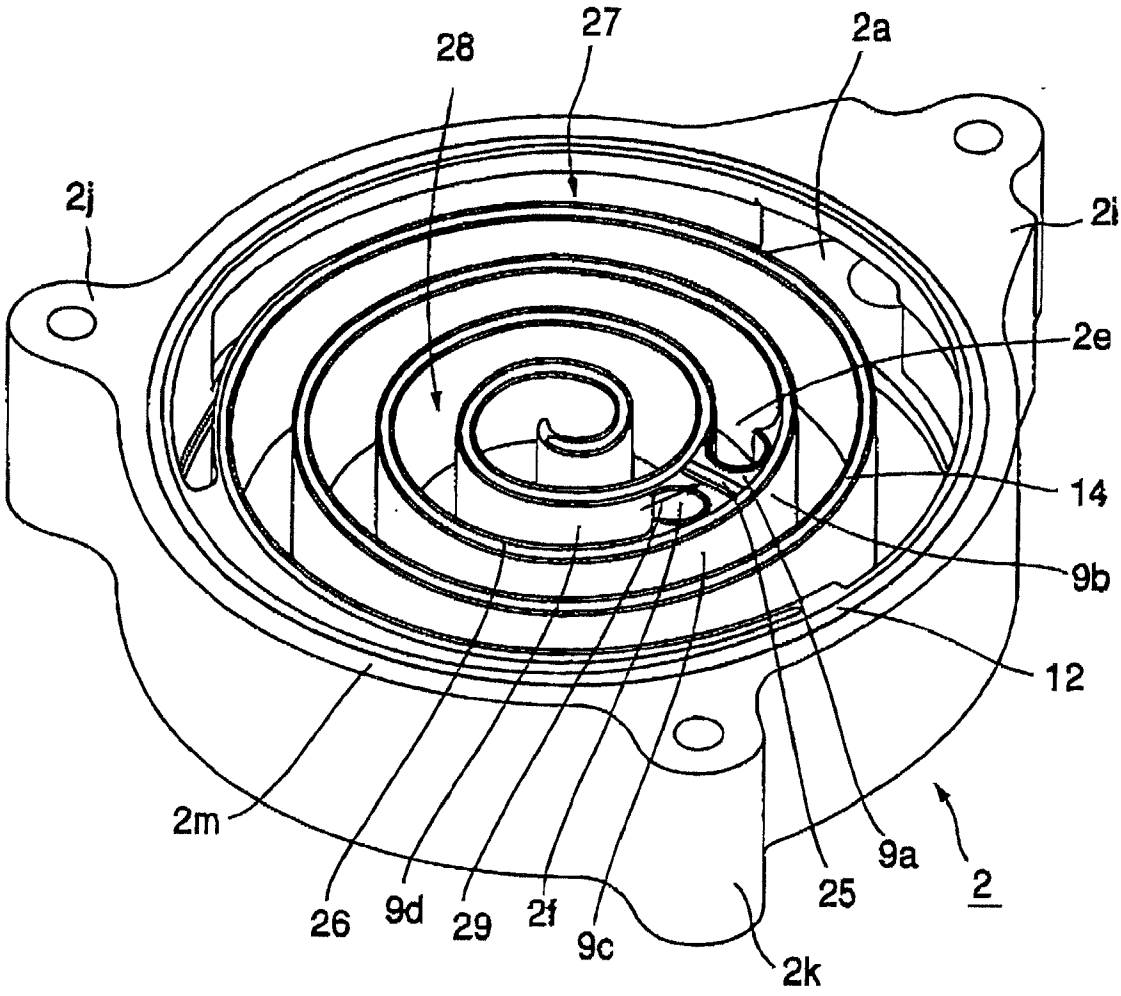

FIG.1

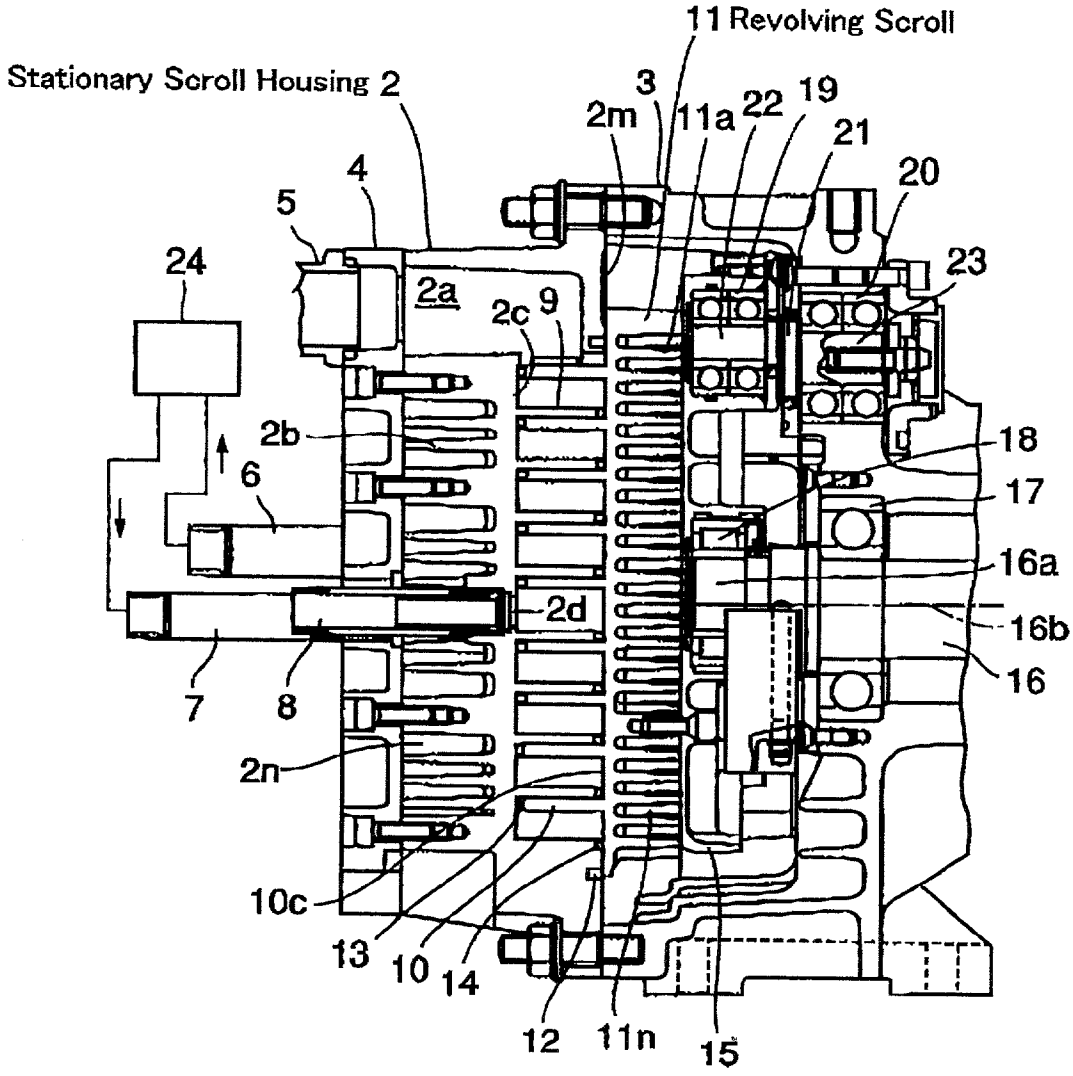
11 Revolving Scroll
Stationary Scroll Housing 2
3
2m
11a
22
19
21
20
4
5
24
2a
2c
9
23
2b
18
6
17
16a
2d
16b
16
7
8
2n
10c
13
10
14
12
11n
15

FIG.2

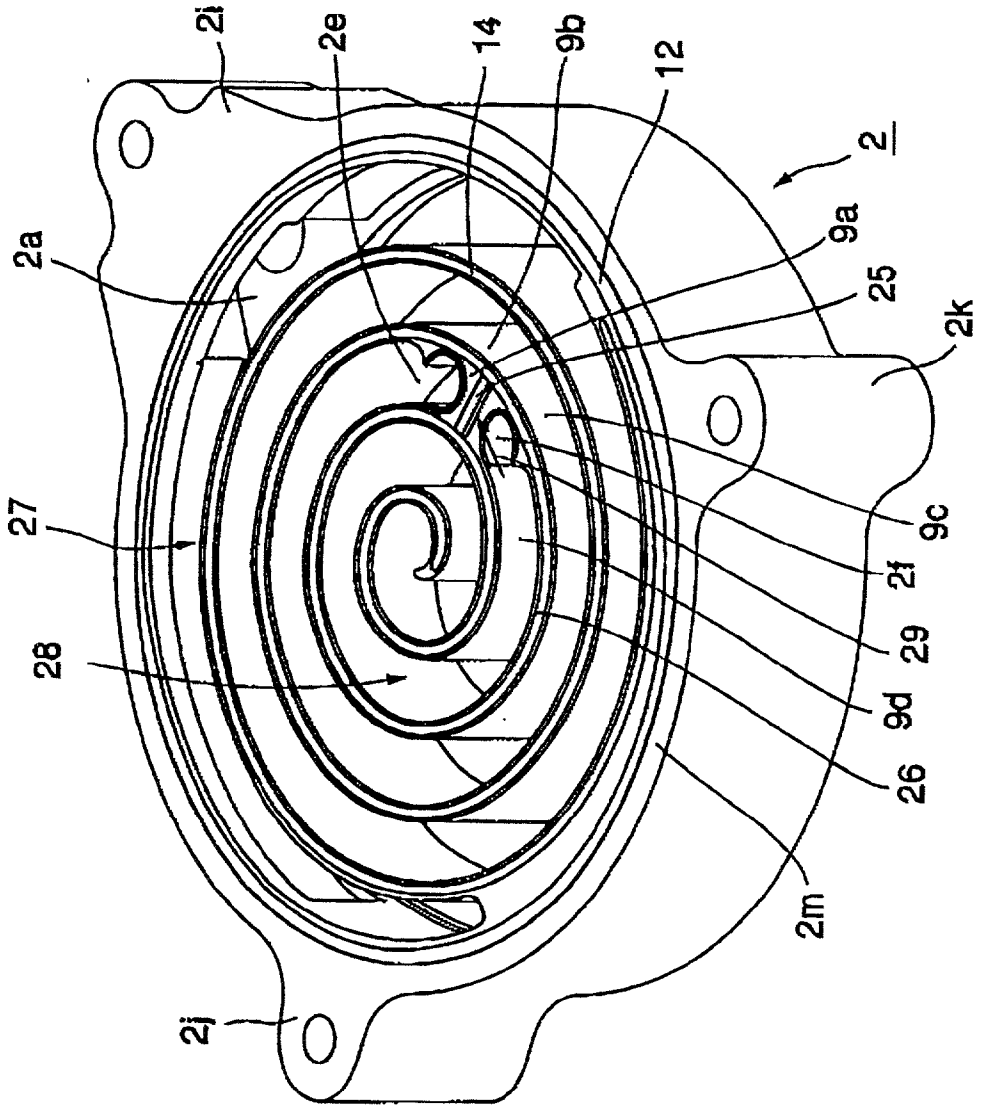

FIG.3

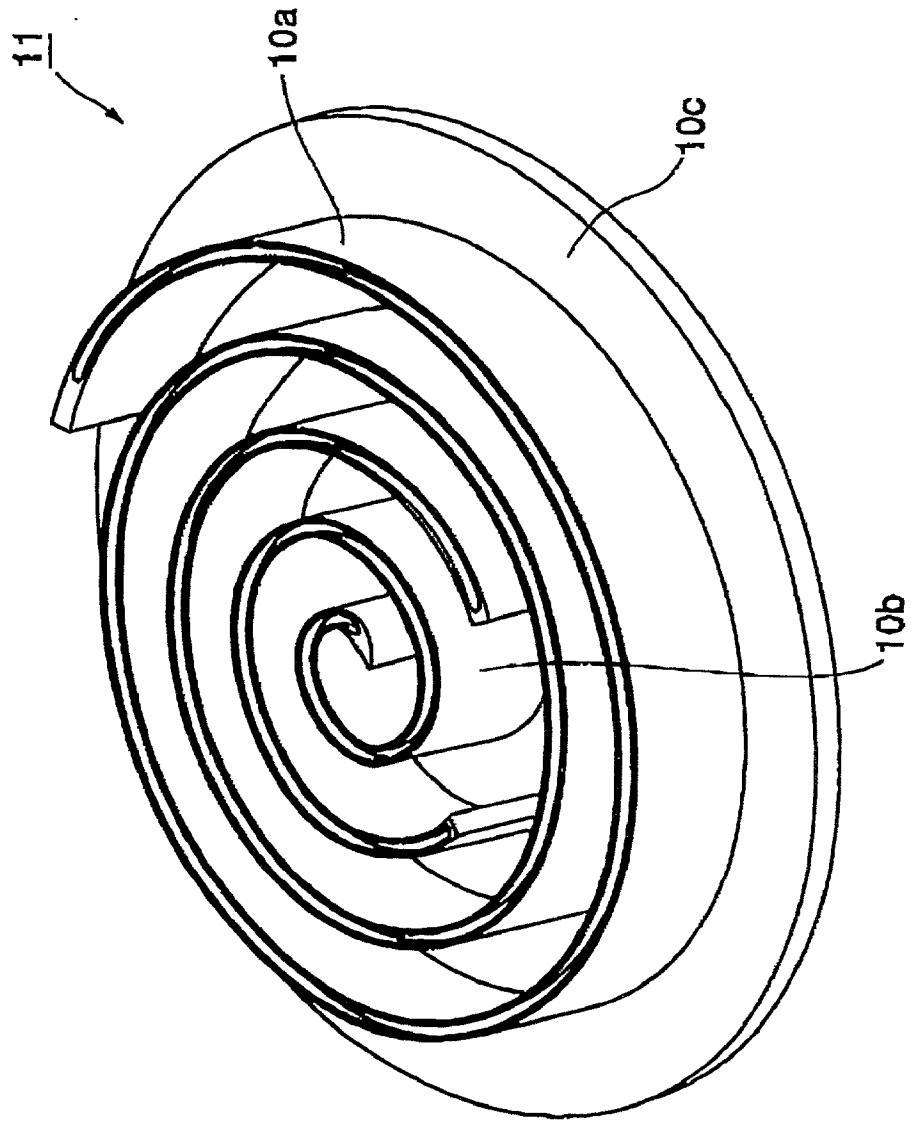

FIG.4

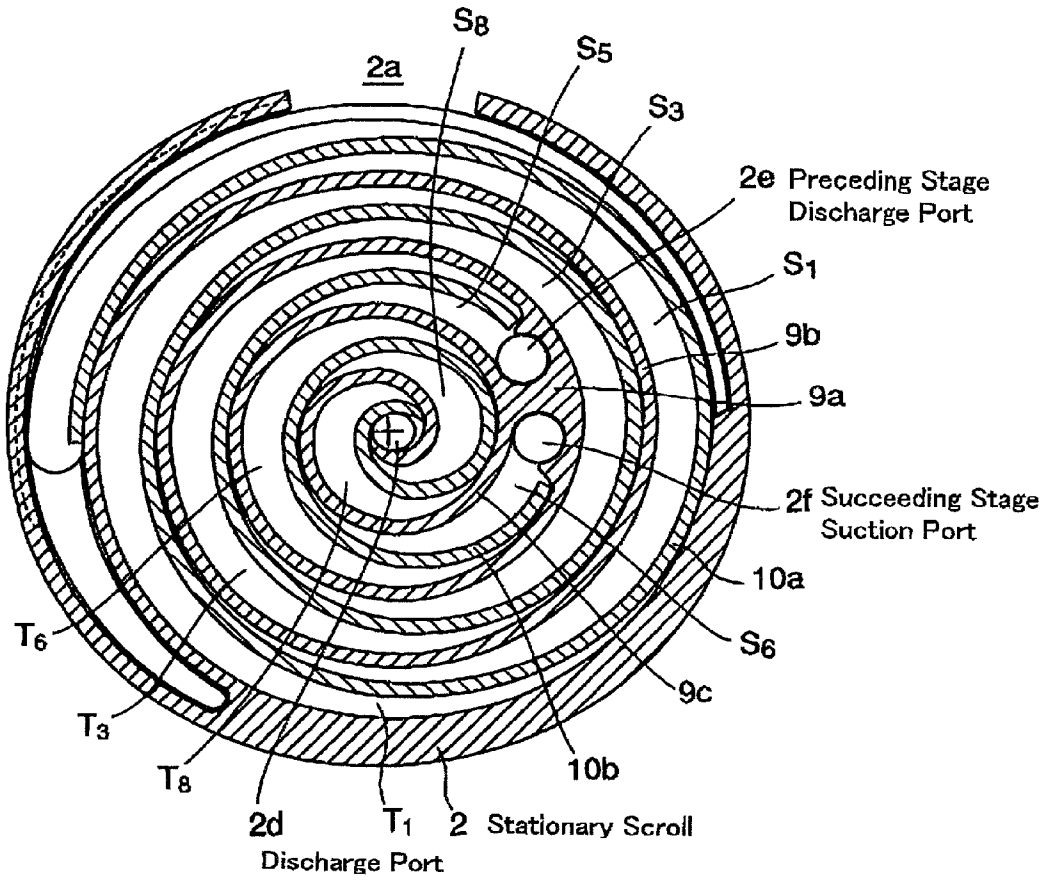
S8
S5
2a
S3
2e Preceding Stage Discharge Port
S1
9b
9a
2f Succeeding Stage Suction Port
10a
S6
9c
T6
T3
T8
10b
2d Discharge Port
T1
2 Stationary Scroll

FIG.5

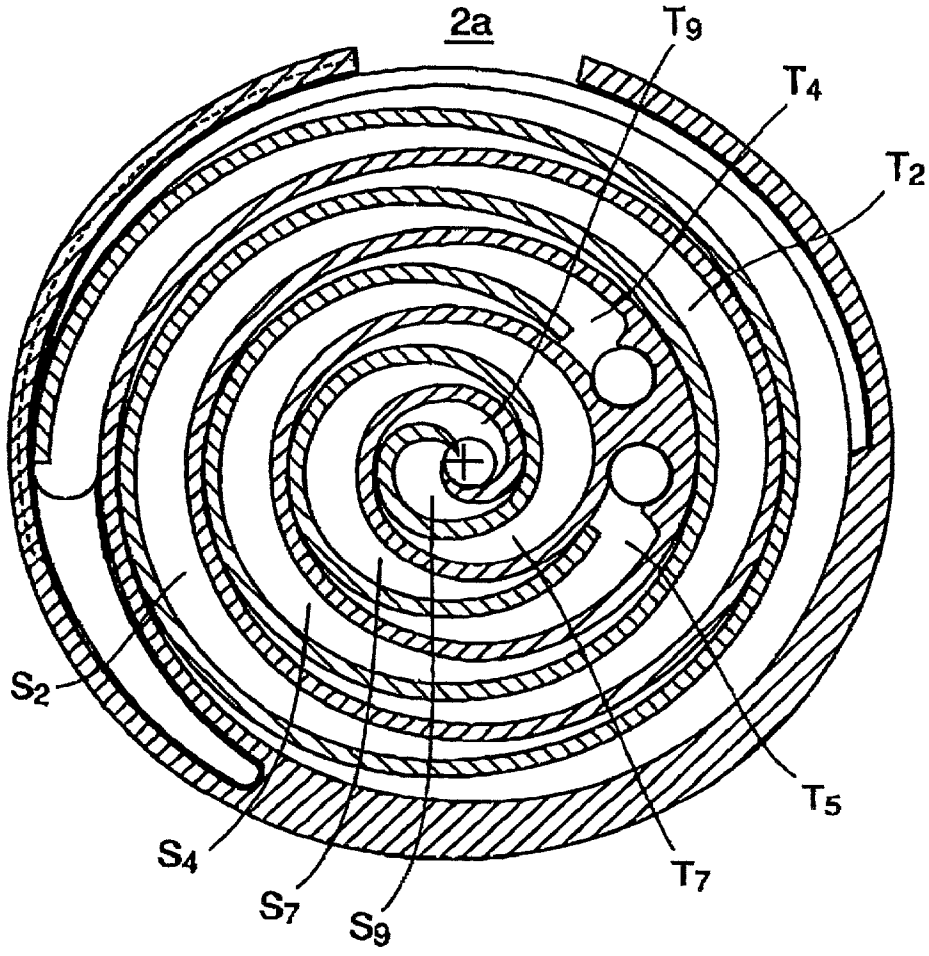

FIG.6

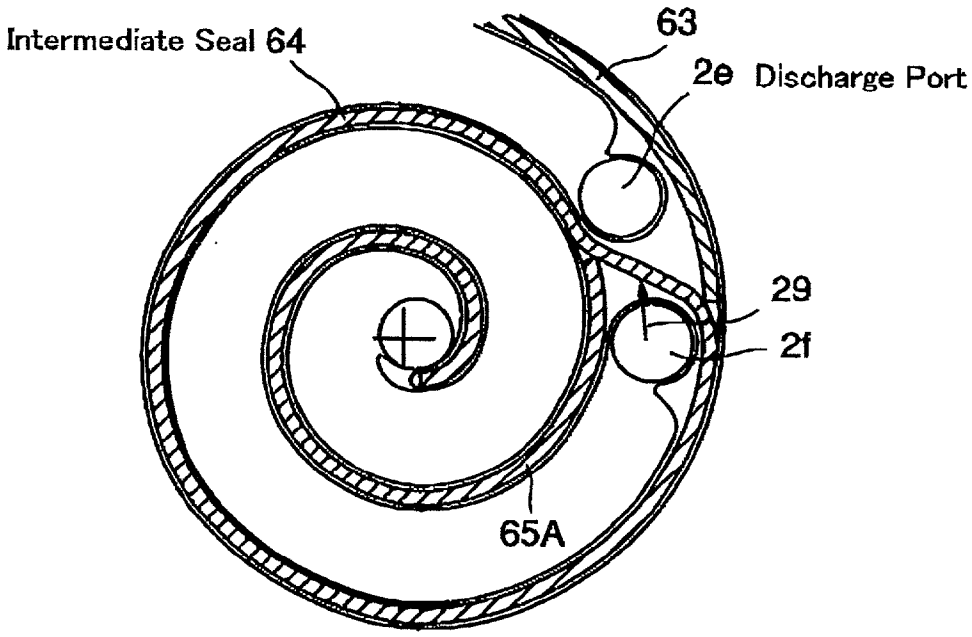

FIG.7

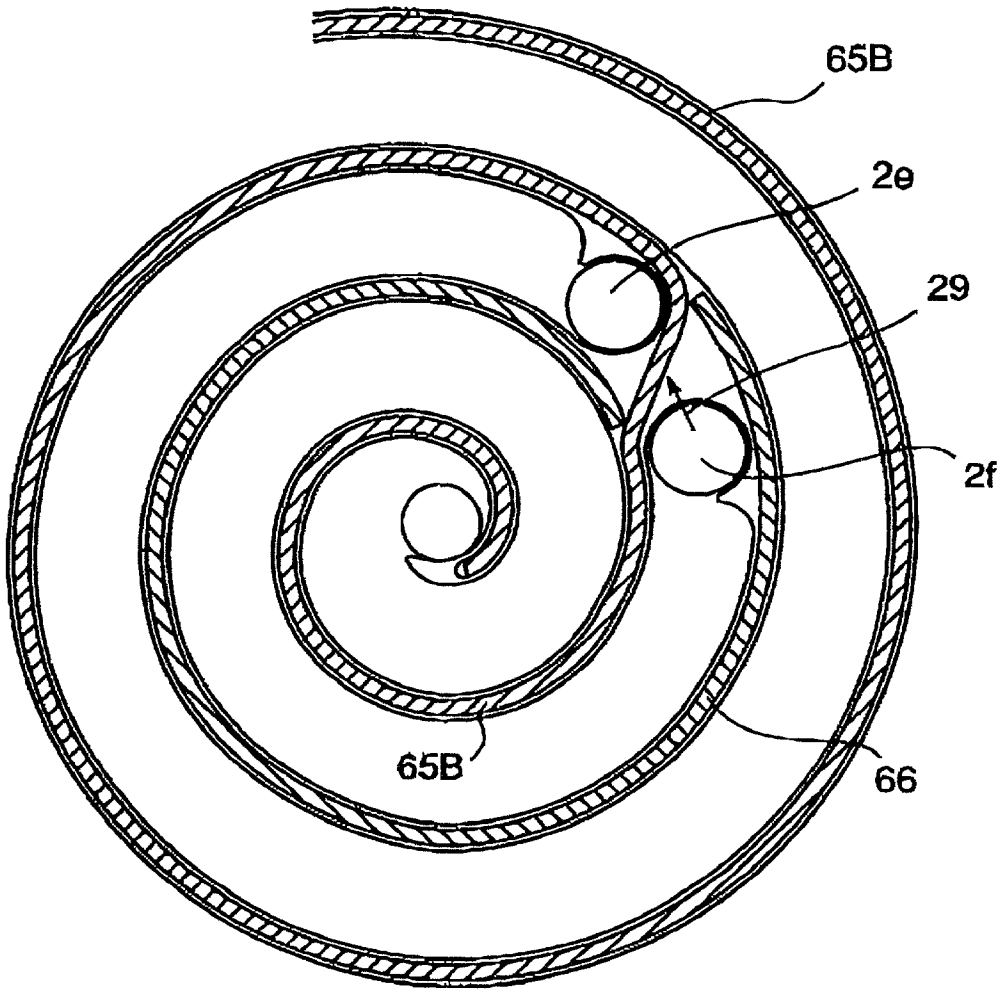

FIG.8

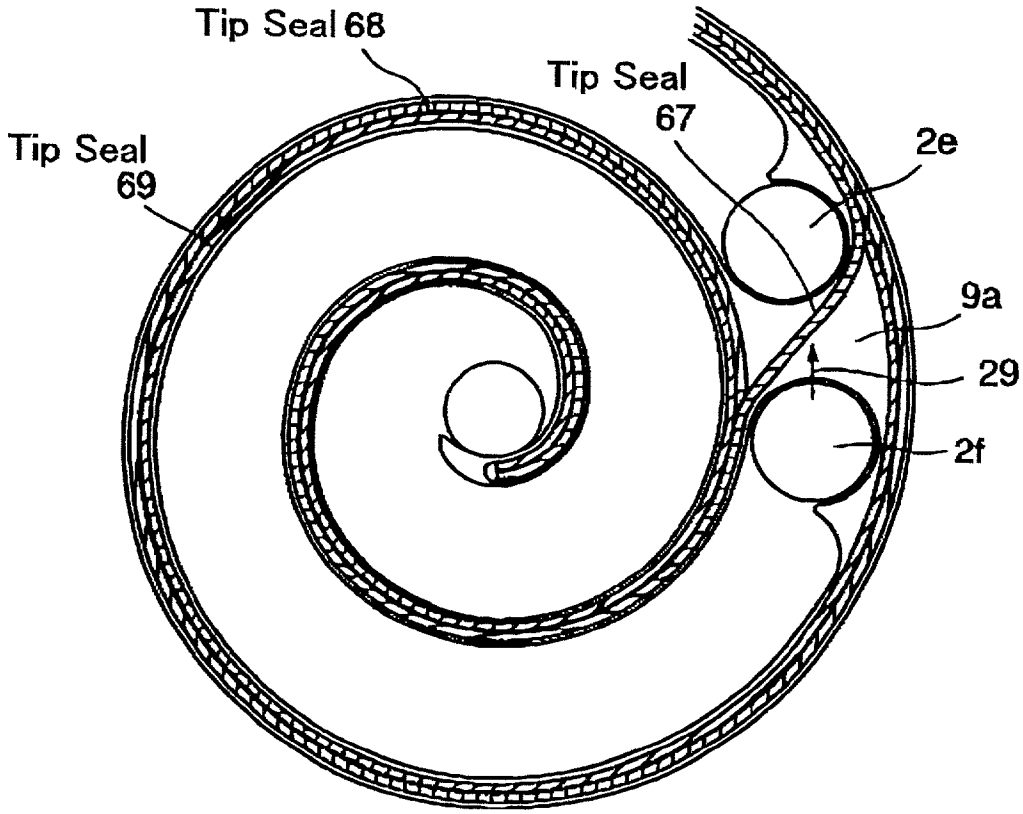

FIG.9

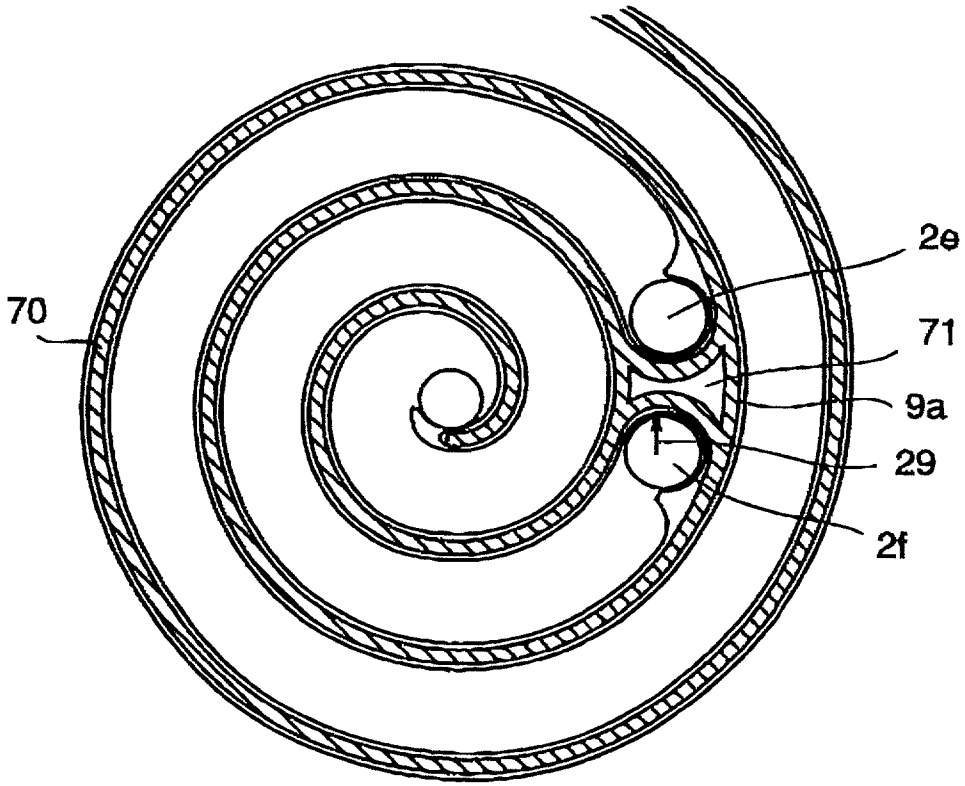

FIG.10

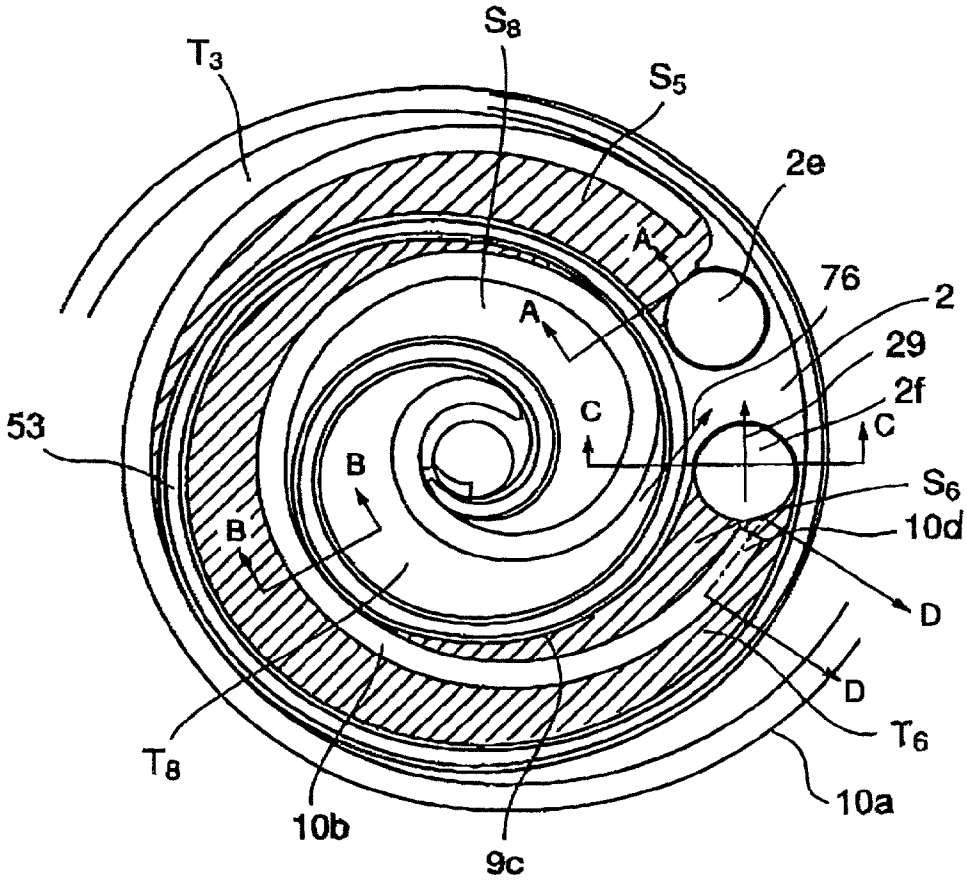

FIG.11(a)

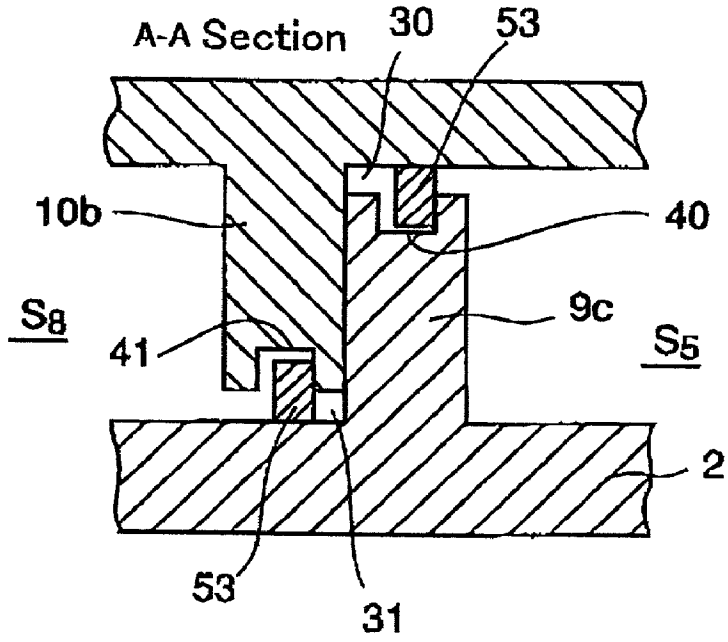

FIG.11(b)

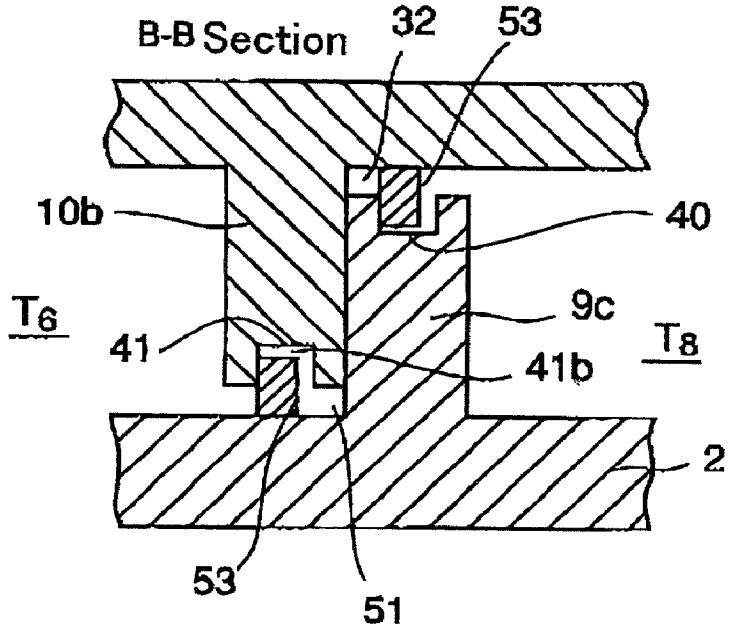

FIG.12(a)

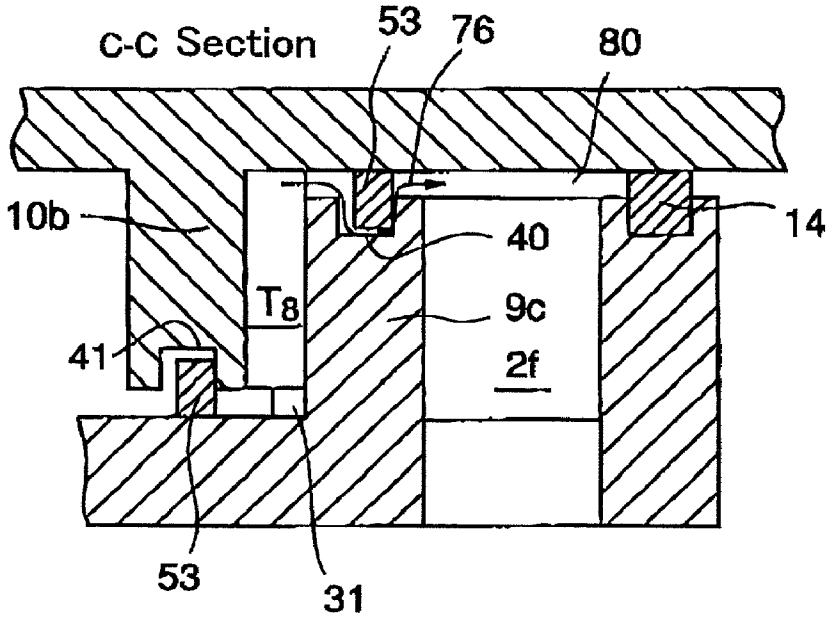

FIG.12(b)

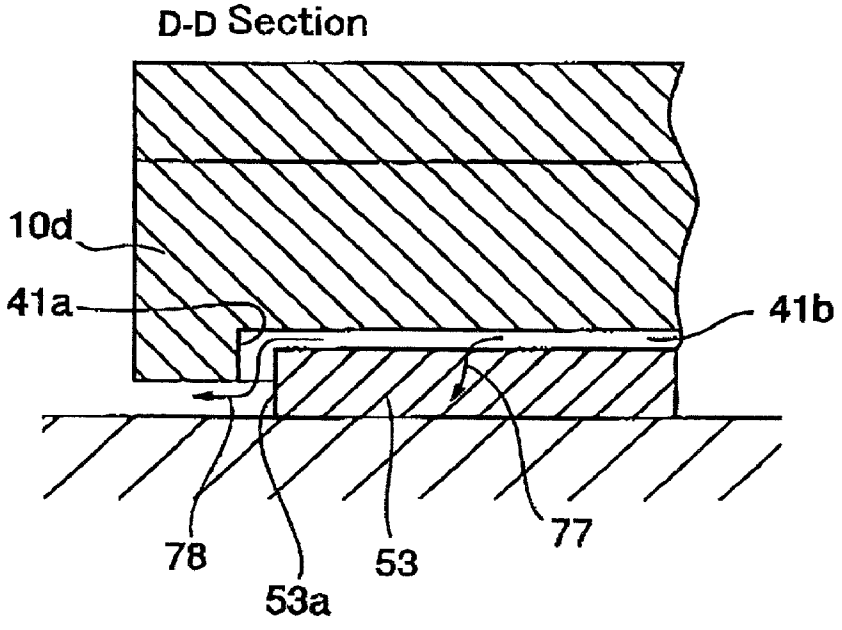

SCROLL FLUID MACHINE

BACKGROUND OF THE INVENTION

[0001] 1. Field of the Invention

[0002] The present invention relates to a scroll fluid machine for compressing or expanding or pressure feeding fluid, specifically to a seal configuration of a scroll fluid machine having multistage compression section in which the fluid compressed in the preceding stage compression section is cooled to be compressed in the succeeding stage compression section and a seal element is provided to prevent the leakage of the compressed fluid from the succeeding stage compression section to the preceding stage compression section.

[0003] 2. Description of the Related Art

[0004] It is general in scroll fluid machines that revolving scrolls and stationary scrolls are cooled with cooling air or cooling fluid to remove the heat generated by the compression of the fluid. To attain a compression ratio larger than usual is possible by increasing the number of turns of the scroll. However, there arise problems by increasing the compression ratio than usual that not only the machine becomes large but the life of the bearings and seal elements are shortened due to the high temperature higher than usual owing to the larger compression ratio.

[0005] Therefore it becomes necessary to provide a larger cooling device to obtain a larger amount of cold heat for removing the increased heat due to increase compression ratio from the revolving scroll and stationary scroll. In a scroll fluid machine, the fluid is taken in from the peripheral part of the end plate of the revolving scroll, the compression space into which the fluid is taken in is reduced toward the center to compress the fluid, and the compressed fluid is discharged from the discharge port located in the center part. High level technique is necessary to efficiently cool the center part.

[0006] For this reason, a multistage compression type scroll machine was demanded which has two stages of compression sections, the compressed fluid discharged from the preceding stage being passed through the cooler to be introduced to the succeeding stage to be again compressed. The multistage compression type scroll machine can compress fluid to a desired high compression ratio without raising the temperature of the constituent parts of the scroll fluid machine higher than usual by restraining the temperature of the compressed fluid in the preceding stage to the temperature the constituent parts allow, cooling the compressed fluid compressed in the preceding stage compression section, and then again compressing the compressed and cooled fluid if the succeeding stage compression section.

[0007] A multistage compression type scroll machine which has two stages of compression sections and in which the compressed fluid from the preceding stage is cooled by passing through a cooler and then introduced to the succeeding stage to be again compressed is disclosed in Japanese Unexamined Patent Publication 54-59608.

[0008] The conventional art includes, however, the problem as described below. This will be explained with reference to FIGS. **10** to **12**. The discharge port **2***e* in the vicinity of the final compression chamber of the preceding stage compression section and the suction port **2***f*, which communicate with the space into which the fluid is taken in, of the succeeding stage compression section are connected with a piping by the medium of a cooler not shown in the drawing, the connection constituting an intermediate passage.

[0009] Now, after the compression space **S3** of the preceding stage compression section communicates with the discharge port **2***e* of the preceding stage compression section, the compression space **S6** and **T6** of the succeeding stage compression section become communicated with the compression space **S5** of the preceding stage compression section, as shown in **FIG. 10**. The fluid taken into the compression space **S6** is compressed by the rotation of the revolving scroll lap **10***b* to the compression space **S8**, and the fluid taken into the compression space **T6** is compressed to the compression space **T8**. Therefore, the pressure in the space **S8** is higher than that in the space **S6**, and the pressure in the space **T8** is higher than that in the space **T6**.

[0010] As can be seen in **FIG. 11**(*a*), **FIG. 11**(*b*), and **FIG. 12**, which show respectively A-A section, B-B section, and C-C section in **FIG. 10, a** tip seal **53** is received in the groove **41** formed in the tip of the revolving scroll lap **10***b* and in the groove **40** formed in the tip of the stationary scroll lap **9***c* respectively. As the tip seal **53** is shaped narrower in width than that of the groove **40** and **41**, the tip seals **53**, **53** receive the pressure of the compressed fluid of each compression space to be pushed against the mirror face each mating scroll and at the same time to be pushed against the wall each groove toward lower pressure side.

[0011] Accordingly, the passage **30** and **31** communicating with the compression space **T6** are formed as shown in **FIG. 11**(*a*), and the leakage to the lower pressure space **T6** is possible.

[0012] The passage **32** and **51** communicating with the compression space **S8** are formed as shown in **FIG. 11**(*b*), and the leakage to the lower pressure space **S6** is possible.

[0013] The tip seal is pushed against the groove wall toward lower pressure side. However, the side face of the tip seal and the groove face can not be brought to absolute contact with each other because of the imperfect flatness of the faces. Accordingly, the leakage of high pressure fluid in the direction of arrow **76** to the gap **80** between the tip seal **14** and **53** is possible as shown in **FIG. 12**(*a*) which shows C-C section in **FIG. 10**.

[0014] There is a gap between the bottom of the groove formed in the tip of the revolving scroll lap and the tip seal **53**, so the leakage of the fluid is possible from higher pressure side to lower pressure side. This means that, as a gap exists between the end face **41***a* of the groove **41** and the end face **53***a* of the tip seal **53** at the end part **10***d* of the revolving scroll lap **53**, the leakage of the compressed fluid in the direction of arrow **78** is possible, and also the leakage as shown by arrow **77** is possible from the passage **51**.

[0015] Therefore, as shown in **FIG. 10** and **FIG. 12**(*a*), the high pressure fluid leaks from the succeeding stage compression section to the preceding stage compression section through the gap **80** shown by arrow **29** and **76** to be taken into the preceding stage compression section to be compressed again, which causes problems of high temperature and excessive power requirement for compression.

SUMMARY OF THE INVENTION

[0016] The present invention was made to solve the problem mentioned above, the object is to provide the seal construction of a multi-stage compression type scroll fluid machine for preventing the leakage of high pressure compressed fluid to the preceding stage compression section from the succeeding stage compression section.

[0017] To solve the problem mentioned above, the present invention offers a scroll fluid machine with multistage compression section in which the fluid compressed in the preceding stage compression section is further compressed in the succeeding stage compression section characterized in that:

[0018] a lap groove is formed spiraling from the vicinity of the discharge port of the compressed fluid of the final stage compression space to the fluid take-in side of the initial stage compression space, in the tip of the lap being formed a tip seal grove to receive a seal element, and a rand is formed between the discharge port at the compression end part of said preceding stage compression section and the suction port of the succeeding stage compression section; and

[0019] an intermediate seal element is received in the intermediate groove formed on the surface of said rand which faces the end plate of the mating scroll for preventing the leakage of the compressed fluid from said succeeding stage compression section to said discharge port opening side of said preceding stage compression section.

[0020] In the present invention, the scroll lap on the tip of which is located a tip seal which contacts and slide on the mating scroll end plate, is formed spirally from the vicinity of the discharge port of compressed fluid in the final stage compression space toward the take-in side of the initial stage compression section forming lap grooves between said lap and the adjacent lap of the mating scroll; and a rand is formed between the discharge port at the end part of the lap groove of said preceding stage compression section and the suction port at the starting part of the lap groove of said succeeding stage compression section. The compressed fluid discharged from said discharge port is introduced in said succeeding stage compression section from said suction port via an intermediate passage provided with a cooler.

[0021] Said rand may be formed in the stationary scroll or in the revolving scroll.

[0022] In the tip groove of the lap is received a tip seal which is pushed by fluid pressure against the mirror surface of the mating scroll end plate, so a gap is produced between said mirror face of the mating scroll end plate and the surface of said rand, and said discharge port opening is communicated through said gap with said suction port opening. Therefore, the compressed fluid leaked from space **S6**, **T6**, and **T8** as shown by arrow **29** and **76** toward said suction port opening of the succeeding stage compression section (the leak passage is explained in **FIGS. 11, 12**) advances toward said discharge port opening of the preceding stage compression section. But, according to the present invention, an intermediate seal element is provided on the rand between said suction port opening and said discharge opening, so the leakage of the compressed fluid toward the discharge port opening side is prevented.

[0023] The seal element consists of a tip seal received in the tip groove formed in the spiral lap and an intermediate seal element received in the grove formed in the rand between the discharge port opening and the suction port opening.

[0024] As shown in **FIG. 2** for example, the seal element **26** (tip seal) seals to partition the lap groove in the succeeding stage compression section, a seal element **14** (tip seal) seals to partition the lap groove in the preceding stage compression section, and an intermediate seal element **25** seals the gap between the rand and the mating scroll end plate. The seal element **26** is the extension of the seal element **14**.

[0025] It is suitable to form the intermediate seal element as circular seal element partitioning the succeeding stage compression section circularly.

[0026] In this case, as shown in **FIG. 6** for example, the intermediate seal element is formed as a closed, single circular seal, part of which contributes as the intermediate seal on the rand between the suction and discharge port opening. As the seal element surrounds completely the succeeding stage compression section as a single seal element, effective seal between the succeeding stage compression section and the preceding stage compression section is performed.

[0027] It is also suitable that the seal element consists of a first seal element which extends spirally from the fluid take-in side of said preceding stage compression section side to the final discharge port side of said succeeding stage compression section and partitions said discharge port opening and said suction port opening at said rand surface in the course of its extension; and a second seal element, an end of which contacts the side face of said first seal element at the side opposite to said discharge port opening in the vicinity of said discharge port opening and which extends from the vicinity of said discharge port opening to the vicinity of said discharge port opening, surrounding said succeeding stage compression section to contact the side face of said first seal element at the side opposite to said suction port opening.

[0028] It is also suitable that a tip seal groove is formed extending spirally from the fluid take-in side of said initial stage compression section toward the compressed fluid discharge port side of said final stage compression space,

[0029] an intermediate groove is formed communicating with said tip seal groove in said rand between said discharge port opening and said suction port opening, a set of seal elements consisting of a plurality of seal elements is received in said intermediate groove and said tip seal groove, said seal set consists of;

[0030] a first tip seal which extends from the compressed fluid discharge port side of said final stage compression space toward said initial stage compression space via said intermediate groove,

[0031] a second tip seal which extends parallel with said first tip seal from the compressed fluid discharge port side of said final stage compression space to the vicinity of said suction port opening

where the second tip seal depart from said first tip seal and contacts said first seal in the vicinity of said discharge port opening, and

[0032] a third tip seal which extends in said tip groove parallel with said second tip seal from the vicinity of said suction port opening to partition said succeeding stage compression section circularly and further extends parallel with said first tip seal toward said initial stage compression section side.

[0033] With this configuration, as shown in **FIG. 8** for example, the third tip seal **68** is located in the outer side of the second tip seal **69** which contacts the side face of the first tip seal **67** in the vicinity of the discharge port opening, so the contact portion of the first tip seal **67** and the second tip seal **69** is covered by the third tip seal. Thus, the sealing between the preceding stage compression section and the succeeding stage compression section is performed by the first seal element and the second seal element completely like the case shown in **FIG. 6**, and the leakage of the compressed fluid to the preceding stage compression section is effectively prevented.

[0034] It is also suitable that a tip seal groove is formed extending spirally from the fluid take-in side of said initial stage compression section toward the compressed fluid discharge port side of said final stage compression space,

[0035] an intermediate groove is formed communicating with said tip seal groove in said rand between said discharge port opening and said suction port opening, and

[0036] said seal element is a single tip seal received in said tip seal groove and said intermediate groove.

[0037] With this configuration of the seal element, the prevention of leakage of the compressed fluid is performed by a single tip seal, and the number of constituent parts is reduced.

[0038] In addition, as the tip seal can be inserted into the groove taking the part of the tip seal corresponding to the intermediate groove as the position basis, it is easier to assemble the tip seal into the tip groove. First the intermediate part of the seal element is inserted into the intermediate groove, then the remaining part can be easily inserted along the tip groove toward the center side in one hand and toward the outer periphery side on the other hand.

BRIEF DESCRIPTION OF THE DRAWINGS

[0039] **FIG. 1** is a cross-sectional view of the scroll fluid machine of an embodiment according to the present invention.

[0040] **FIG. 2** is a perspective view of the scroll housing.

[0041] **FIG. 3** is a perspective view of the revolving scroll.

[0042] **FIG. 4** is an elevational view in section of the stationary scroll for explaining the condition of compression of the fluid when the fluid is taken in by the revolving scroll lap.

[0043] **FIG. 5** is an elevational view in section of the stationary scroll for explaining the condition of compression of the fluid when the revolving scroll is rotated by 180° from situation in **FIG. 4**.

[0044] **FIG. 6** is an explanatory representation of the second embodiment of seal construction according to the present invention.

[0045] **FIG. 7** is an explanatory representation of the third embodiment of seal construction according to the present invention.

[0046] **FIG. 8** is an explanatory representation of the fourth embodiment of seal construction according to the present invention.

[0047] **FIG. 9** is an explanatory representation of the fifth embodiment of seal construction according to the present invention.

[0048] **FIG. 10** is a plan view of scroll for explaining taking-in action of compressed fluid into the succeeding stage compression section of the conventional art.

[0049] FIGS. **11**(*a*) and (*b*) is a partial sectional view along line A-A and B-B respectively in **FIG. 10**.

[0050] FIGS. **12**(*a*) and (*b*) is a partial sectional view along line C-C and D-D respectively in **FIG. 10**.

[0051] Reference numeral **1** denotes scroll fluid machine, **2** denotes stationary scroll housing, **2***e* denotes discharge port, **2***f* denotes suction port, **3** denotes driveshaft housing, **9***a* denotes rand, **11** denotes revolving scroll, **24** denotes cooling room, **25** denotes intermediate seal element(seal element), **27** and **28** denote spiral grooves formed by stationary scroll laps.

DETAILED DESCRIPTION OF THE PREFERRED EMBODIMENTS

[0052] A preferred embodiment of the present invention will now be detailed with reference to the accompanying drawings. It is intended, however, that unless particularly specified, dimensions, materials, relative positions and so forth of the constituent parts in the embodiments shall be interpreted as illustrative only not as limitative of the scope of the present invention.

[0053] **FIG. 1** is a cross-sectional view of the scroll fluid machine of an embodiment according to the present invention, **FIG. 2** is a perspective view of the scroll housing, **FIG. 3** is a perspective view of the revolving scroll, **FIG. 4** is an elevational view in section of the stationary scroll for explaining the condition of compression of the fluid when the fluid is taken in by the revolving scroll lap, **FIG. 5** is an elevational view in section of the stationary scroll for explaining the condition of compression of the fluid when the revolving scroll is rotated by 180° from the situation in **FIG. 4**, **FIG. 6** is an explanatory representation of the second embodiment of seal construction according to the present invention, **FIG. 7** is an explanatory representation of the third embodiment of seal construction according to the present invention, **FIG. 8** is an explanatory representation of the fourth embodiment of seal construction according to the present invention, **FIG. 9** is an explanatory representation of the fifth embodiment of seal construction according to the present invention.

[0054] In **FIG. 1**, the multistage type scroll fluid machine body **1** is composed of a stationary scroll housing **2** with a housing cover **4** attached to it and a driveshaft housing **3** to which the stationary scroll housing **2** is attached.

[0055] A cooling room **24** is provided between a discharge pipe **6** connected to the discharge port of the preceding stage compression section mentioned later of the stationary scroll housing and the suction pipe **7** connected to the suction port of the succeeding stage compression section. The cooling room **24**, discharge pipe **6**, and suction pipe **7** connected by piping constitute an intermediate passage.

[0056] The volume of the intermediate passage from the discharge port **2***e* of the preceding stage through the piping passing in the cooling room to the suction port **2***f* of the succeeding stage is determined to be N(integer) times the final compression chamber volume of the preceding stage compression section. Thus, after N times of discharge from the final compression chamber of the preceding stage compression section, the same volume of fluid as that of the final compression chamber of the preceding stage compression section is taken into the succeeding stage compression section.

[0057] However, when the scroll fluid machine is at a standstill at the start of initial operation, fluid exists in the final compression chamber of the succeeding stage compression section of the fluid compression space formed by the stationary scroll lap and revolving scroll lap at the pressure equal to the outside pressure at the discharge port **2***d*(see **FIG. 1**) or lower.

[0058] The pressure of the fluid in the initial take-in space of the succeeding stage compression section, as the take-in space communicates with the intermediate passage, may be reduced to the take-in pressure of the preceding stage compression section.

[0059] When the initial operation is started in this state, the fluid residing in the succeeding stage compression section is compressed to the pressure higher than the outside pressure. That is, if the pressure when the fluid in the final compression chamber of the succeeding compression chamber is connected with the fluid in the compression chamber existing toward the suction port side of the succeeding compression chamber is higher than the outside pressure, the fluid is discharged to the outside, but if the pressure is still lower than the outside pressure, fluid is taken in from the intermediate passage and the fluid is discharged together with the fluid in the discharge port side.

[0060] The initial operation comes to end when, after N times of discharge from the final compression chamber of the preceding stage compression section, the same volume of fluid as that of the final compression chamber of the preceding stage compression section is taken-in into the initial chamber of the succeeding stage compression section.

[0061] The stationary scroll housing **2** is formed into a shape of circular tray as shown in **FIG. 2**. Three ears **2***i*, **2***j*, **2***k* are formed on the periphery of the housing **2** for connecting the driveshaft housing **3** fitting to the mating surface **2***m* of the housing **2** with bolts. The bottom of concave of the housing **2** is finished to a mirror surface **2***c* which communicates with the suction port **2***a* formed in the ear **2***i*.

[0062] A circular groove is formed on the mating surface **2***m* and a dust seal **12** made of material having self lubricating property such as fluororesin and the like is received in the groove.

[0063] On the mirror surface **2***c* are provided a discharge port **2***e* of preceding stage (see **FIGS. 4, 5**) which communicates with the discharge pipe **6** shown in **FIG. 1**, and a suction port **2***f* of the succeeding stage (see **FIGS. 4, 5**) which communicates with the suction pipe **7**. A stationary scroll lap **9***b* extends spirally in a counterclockwise direction from the rand **9***a* between these ports to form the preceding stage compression section and a stationary scroll lap **9***c* extends spirally in a clockwise direction from the rand **9***a* to form the succeeding stage compression section, embedded on the mirror surface **2***c*. A groove is formed in the tip of each lap, and a tip seal **14** made of material having self lubricating property such as fluororesin and the like is received in each groove.

[0064] An intermediate seal element **25** made of material having self lubricating property such as fluororesin and the like is provided on the rand **9***a* between the tip seal **14**, **14**. The intermediate seal element **25** is to prevent the high pressure compressed fluid from being leaked to the preceding stage compression section side and compressed and again fed back to the succeeding stage compression section.

[0065] Cooling fins **2***b* are formed on the rear side of the mirror face **2***c* of the stationary scroll housing **2** as shown in **FIG. 1**. On the tip of the cooling fins **2***b* is attached the housing cover **4** to form cooling passages **2***n*. Therefore, the stationary scroll is cooled by the cooling air flowing in the direction penetrating the sheet.

[0066] A revolving scroll **11** has a mirror face **10***c* on which a revolving scroll lap **10***a* for forming the preceding stage compression section in the outer side region and a revolving scroll lap **10***b* for forming the succeeding stage compression section in the center side region are embedded. The revolving scroll **11** is disposed so that the mirror face **10***c* contacts the dust seal **12** provided on the mating face of the stationary scroll housing **2**. A groove is formed in the tip of each lap and a tip seal **13** made of material having self lubricating property such as fluororesin and the like is received in each groove.

[0067] The revolving scroll **11** is disposed so that the walls of the revolving scroll lap **10***a*, **10***b* face the walls of the stationary scroll lap **9***b*, **9***c* respectively.

[0068] Cooling fins **11***a* are formed on the rear side of the mirror face as shown in **FIG. 1**. On the tip of the cooling fins is attached an auxiliary cover **15** to form cooling passages **11***n*. Therefore, the revolving scroll is cooled by the cooling air flowing in the direction penetrating the sheet.

[0069] A bearing **18** which supports for rotation the eccentric **16***a* formed at the end of a rotation driveshaft **16** mentioned later is located in the center of the auxiliary cover **15**, and in the periphery side thereof are located bearings **19** at the positions equally divided in three along a circumference to support crank assemblies to prevent the rotation of the revolving scroll.

[0070] Each crank assembly is composed of a plate **21** having on the one side a shaft **22** supported by the bearing **19** and on the other side a shaft **23** offset in relation to the shaft **22**.

[0071] The shaft **23** is supported by a bearing **20** located in the driveshaft housing **3**. The eccentric **16***a* revolves around the center axis of the rotation driveshaft **16** as the shaft **16** rotates, and the revolving scroll **11** performs revolving motion in relation to the stationary scroll.

[0072] The driveshaft housing **3** has an opening on its side to introduce cooling air in the direction penetrating the sheet on which **FIG. 1** is depicted for cooling the cooling fins **11***a* of the revolving scroll. The rotation drive shaft **16** is supported by a bearing **17** for rotation in the center of the driveshaft housing **3** and connected with the rotation shaft of a motor not shown in the drawing.

[0073] With the construction mentioned above, the revolving scroll revolves as the rotation shaft **16** rotates, and as shown in **FIG. 4**, the fluid sucked from the suction port **2***a* of the stationary scroll housing **2** is taken in by the revolving scroll lap **10***a* to be trapped in the enclosed space **S1** and **T1** formed by the revolving scroll lap **10***a* and stationary scroll lap **9***b*.

[0074] These two enclosed space is different in phase by 180° but the volume is about the same.

[0075] The enclosed spaces move as the revolving scroll revolves as shown in **FIGS. 4 and 5**. The fluid taken-in in the enclosed space **S1** in **FIG. 4** is compressed sequentially from **S1** to **S2**→**S3**→**S4**→**S5**, from **S5** to the preceding stage discharge port **2***e*→intermediate passage→succeeding stage suction port **2***f*→**S6**→**S7**→**S8**→**S9**, the fluid taken-in in the enclosed space **T1** in **FIG. 4** is compressed sequentially from **T1** to **T2**→**T3**→**T4**, from **T4** to the preceding stage discharge port **2***e*→intermediate passage→succeeding stage suction port **2***f*→**T5**→**T6**→**T7**→**T8**→**T9**, and the compressed fluid in the space **S9** and **T9** are discharged together from the discharge port **2***d* in the center to a pipe **8** to be sent out.

[0076] Since the volume of the final compression space of S side and T side is the same, the fluid of the same pressure is discharged from S side final compression space and T side final compression space through the discharge port **2***d*.

[0077] As the intermediate seal element **25** made of material having self lubricating property such as fluororesin and the like is located between the tip seal **14** and **14** as shown in **FIG. 2**, the high pressure compressed fluid is prevented by the intermediate seal element **25** from being leaked to the preceding stage compression section side and compressed and again fed back to the succeeding stage compression section.

[0078] **FIG. 6** shows the second embodiment of seal construction. Instead of the tip seal **14** in the first embodiment, tip seals consisting of a tip seal **63** of the preceding stage compression section, a tip seal **65**A of the succeeding stage compression section, and an intermediate seal **64** are used. The intermediate seal **64** partitions the preceding stage discharge port **2***e* and the succeeding stage suction port **2***f* and encircles the succeeding stage compression section. So, the leakage of high pressure fluid to the preceding stage compression section as shown by arrow **29** in **FIG. 6** is prevented.

[0079] **FIG. 7** shows the third embodiment of seal construction. In the embodiment, tip seals consisting a tip seal **65**B extending from the preceding stage compression section to the succeeding stage compression section and a tip seal **66** encircling the succeeding stage compression section are used. The ship seal **65**B partitions the preceding stage discharge port **2***e* and the succeeding stage suction port **2***f*. So, the leakage of high pressure fluid to the preceding stage compression section as shown by arrow **29** in **FIG. 7** is prevented.

[0080] **FIG. 8** shows the fourth embodiment of seal construction. In the embodiment, three tip seals **67**, **68**, and **69** are used. The tip seal **67** extends from the preceding stage compression section to the succeeding stage compression section. The tip seal **69** is located together with the tip seal **67** from the succeeding stage discharge port **2***e* to the succeeding stage suction port **2***f*, then surrounds the outer side of the succeeding stage compression section together with the tip seal **68** until the preceding stage discharge port **2***e*. The tip seal **68** surrounds the outer side of the succeeding stage compression section together with the tip seal **69** until the preceding stage discharge port **2***e*, then is located together with the tip seal **67**. So, the leakage of high pressure fluid to the preceding stage compression section as shown by arrow **29** in **FIG. 8** is prevented.

[0081] **FIG. 9** shows the fifth embodiment of seal construction. In the embodiment, a single tip seal **70** is received in the groove formed in the tip of the lap. A vacant space **71** is formed in the rand **9***a*, and the cross-sectional area of the tip seal **70** is about same all along the seal to prevent distortion. As the tip seal **70** is formed as a single seal element, the leakage of high pressure fluid to the preceding stage compression section as shown by arrow **29** in **FIG. 9** is effectively prevented.

[0082] According to the embodiments described above, a seal element which contacts the face of the end plate of a mating scroll with contact pressure is located on the surface of the rand between the preceding stage discharge port and the succeeding stage suction port, and the leakage of high pressure fluid to the discharge port side of the preceding stage compression section is prevented.

What is claimed:

1. A scroll fluid machine with multi-stage compression section in which the fluid compressed in the preceding stage compression section is further compressed in the succeeding stage compression section characterized in that:

a lap groove is formed spiraling from the vicinity of the discharge port of the compressed fluid of the final stage compression space to the fluid take-in side of the initial stage compression space, in the tip of the lap being formed a tip seal grove to receive a seal element, and a rand is formed between the discharge port at the compression end part of said preceding stage compression section and the suction port of the succeeding stage compression section; and

an intermediate seal element is received in the intermediate groove formed on the surface of said rand which faces the end plate of the mating scroll for preventing the leakage of the compressed fluid from said succeeding stage compression section to said discharge port opening side of said preceding stage compression section.

2. A scroll fluid machine with multi-stage compression section according to claim 1 characterized in that said seal element consists of;

a tip seal received in the groove formed in the tip of the spiral lap of both side forming said lap groove, and

an intermediate seal element located between said discharge port opening and said suction port opening.

3. A scroll fluid machine with multi-stage compression section according to claim 2 characterized in that,

said intermediate seal element is a circular seal element partitioning said succeeding stage compression section circularly.

4. A scroll fluid machine with multi-stage compression section according to claim 1 characterized in that said seal element consists of;

a first seal element which extends spirally from the fluid take-in side of said preceding stage compression section side to the final discharge port side of said succeeding stage compression section and partitions said discharge port opening and said suction port opening at said rand surface in the course of its extension, and

a second seal element, an end of which contacts the side face of said first seal element at the side opposite to said discharge port opening in the vicinity of said discharge port opening and which extends from the vicinity of said discharge port opening to the vicinity of said discharge port opening, surrounding said succeeding stage compression section to contact the side face of said first seal element at the side opposite to said suction port opening.

5. A scroll fluid machine with multi-stage compression section according to claim 1 characterized in that:

a tip seal groove is formed extending spirally from the fluid take-in side of said initial stage compression section toward the compressed fluid discharge port side of said final stage compression space,

an intermediate groove is formed communicating with said tip seal groove in said rand between said discharge port opening and said suction port opening,

a set of seal elements consisting of a plurality of seal elements is received in said intermediate groove and said tip seal groove,

said seal set consists of;

a first tip seal which extends from the compressed fluid discharge port side of said final stage compression space toward said initial stage compression space via said intermediate groove,

a second tip seal which extends parallel with said first tip seal from the compressed fluid discharge port side of said final stage compression space to the vicinity of said suction port opening where the second tip seal depart from said first tip seal and contacts said first seal in the vicinity of said discharge port opening, and

a third tip seal which extends in said tip groove parallel with said second tip seal from the vicinity of said suction port opening to partition said succeeding stage compression section circularly and further extends parallel with said first tip seal toward said initial stage compression section side.

6. A scroll fluid machine with multi-stage compression section according to claim 1 characterized in that:

a tip seal groove is formed extending spirally from the fluid take-in side of said initial stage compression section toward the compressed fluid discharge port side of said final stage compression space,

an intermediate groove is formed communicating with said tip seal groove in said rand between said discharge port opening and said suction port opening, and

said seal element is a single tip seal received in said tip seal groove and said intermediate groove.

* * * * *