(19) DANMARK

(10) DK/EP 2561305 T3

(12) Oversættelse af europæisk patentskrift

Patent- og Varemærkestyrelsen

(51) Int.Cl.: *F 41 A 9/46 (2006.01)* *F 41 A 9/36 (2006.01)* *F 41 F 1/10 (2006.01)*
F 42 B 39/08 (2006.01)

(45) Oversættelsen bekendtgjort den: **2018-03-26**

(80) Dato for Den Europæiske Patentmyndigheds bekendtgørelse om meddelelse af patentet: **2017-12-27**

(86) Europæisk ansøgning nr.: **11713703.4**

(86) Europæisk indleveringsdag: **2011-04-08**

(87) Den europæiske ansøgnings publiceringsdag: **2013-02-27**

(86) International ansøgning nr.: **EP2011001752**

(87) Internationalt publikationsnr.: **WO2011131298**

(30) Prioritet: **2010-04-21 DE 102010017876**

(84) Designerede stater: **AL AT BE BG CH CY CZ DE DK EE ES FI FR GB GR HR HU IE IS IT LI LT LU LV MC MK MT NL NO PL PT RO RS SE SI SK SM TR**

(73) Patenthaver: **Rheinmetall Waffe Munition GmbH, Heinrich-Ehrhardt-Strasse 2, 29345 Unterlüss, Tyskland**

(72) Opfinder: **SCHNEIDER, Hubert, Lärchenweg 2, 78661 Dietingen, Tyskland**
Heymann, Frank, Im Bühlgarten 1, 78727 Oberndorf a.N., Tyskland
SAND, Heiko, Waldstrasse 19, 72351 Geislingen, Tyskland

(74) Fuldmægtig i Danmark: **Larsen & Birkeholm A/S Skandinavisk Patentbureau, Banegårdspladsen 1, 1570 København V, Danmark**

(54) Benævnelse: **Multirørsvåben**

(56) Fremdragne publikationer:
WO-A1-03/044443
WO-A2-2011/046653
DE-A1- 2 111 060
DE-A1- 4 423 750
DE-C- 53 851
GB-A- 1 279 821
US-A- 386 535

Multiple-barrel weapon

The invention relates to a multiple-barrel weapon, preferably in the small-calibre range but also in the medium-calibre range. The multiple-barrel weapon is characterized in that structurally, it has no cartridge chamber of its own, as this function is performed by the belt element of a belt feeding system.

Multiple-barrel weapons have the advantage that the barrels are not subject to as much stress as basic weapons, even at a high firing rate or frequency. Probably the best known multiple-barrel weapon is the Gatling. Gatling weapons are automatic weapons in which the reloading mechanism is operated by rotating the cluster of barrels arranged about a rotational axis.

DE 1 728 588 A describes a multiple-barrel drum gun with rotating barrels. This gun is based on the principle of an open-chamber breech system. The munition in this case is moved from an insertion position into an ignition position and then into a casing ejection position. The same principle is also reflected in DE 1 728 611 C which deals more closely with a revolver, however. A multiple-barrel weapon is furthermore disclosed in US 3,041,939 A and also US 4,836,082 A.

Munition for a launch device with a laterally open chamber is known from DE 1 728 018 C. The munition is characterized by its shape. The weapon briefly described in this case likewise has an open-chamber breech mechanism with a drum chamber. The drum, for its part, is rotatably mounted and has a chamber which is moved into a munition insertion position, so that the munition can be inserted laterally. Said munition is then moved into an ignition and subsequently into an ejector position. The same subject is also dealt with by DE 1 728 019 B. DE 1 728 022 A relates to a sealed breech with an open chamber and housing-free munition. DE 1 728 088 A claims an open chamber breech mechanism which, among other things, closes the chamber in an ignition position. A rapid-fire gun is furthermore disclosed by DE 1 728 131 A.

US 1,856,022 A relates to a machine gun and a small arm with two barrels. The

munition is loaded through a slot in the breech or weapon housing. The individual bullets along with the propellant charge are connected to one another by connecting webs and are pushed through the slot into the weapon by a kind of ratchet. At the same time, the web is shorn off by a knife arrangement. The bullet comes to rest in one of the weapon's cartridge chambers in front of the breech. Subsequently, the bullet and the breech are moved into a so-called closed position and the propellant charge is ignited by means of compressed gas.

A combustible strip belt of belt munition for feeding caseless ammunition into an automatic firearm is known from US 3,696,705 A, said strip belt combusting in the chamber of the automatic weapon. This eliminates the problem of the belts falling down from the firearm after the munition has been removed. The strip belt runs transversely through each caseless cartridge. Gearwheels push the cartridge forward, wherein the strip belt is separated from the following cartridge.

DE 44 23 750 A1 discloses an automatic single-barrel firearm for endlessly feedable cartridge ammunition. Two contra-rotating drums each having six symmetrically arranged half chambers which are mounted in a moving manner are used. They form a cartridge chamber completely closed at the periphery between two drums directly opposite the barrel. At the same time that the drums are contra-rotated, the cartridge belt is also moved through the cartridge chamber in each case. Between the drums in this case, a temporarily closed cartridge chamber which withstands the combustion gas pressures is created. Spring elements are the half chambers for the purpose of optimal transportability of the cartridge belt in the most favourable pivoting direction in each case before engagement with the cartridge belt. Actuation of the firing pin takes place via toothing of a control plate and whenever it is guaranteed that the cartridge chamber is completely closed. Rotation of the half chambers takes place via gearwheels of a pneumatic gear motor which is driven by the recycled muzzle gases. In this way, a slightly shorter design and a substantially higher firing speed (cadence) is achieved.

DE 21 11 060 A1 discloses a multiple-barrel automatic weapon with which caseless munition is fired at a high firing speed. As a variation of the traditional Gatling principle, the revolver has, in addition to a rotatable gun barrel cluster, a series of

tubular firing chambers linked to one another for transporting the cartridges in the rotating bodies. The chambers are loaded with the cartridges by means of a charging device.

Building on these ideas, the problem addressed by the invention, based on DE 21 11 060 A1, is that of disclosing a multiple-barrel weapon which is likewise compact.

The problem is solved by the features of Patent Claim 1. Advantageous embodiments can be inferred from the dependent claims.

In order to achieve a lightweight, rapid-firing multiple-barrel weapon, it is provided that the weapon itself no longer has its own (complete) cartridge chamber in which the munition must be placed, wherein two half shells of two contra-rotating drums do not form the cartridge chamber, but instead the function of the cartridge chamber is assumed by the belt system which feeds the munition to the weapon. The belt system therefore forms a or the replacement cartridge chamber. Accordingly, the belt element itself is designed in such a manner that it is able to perform the functions of a cartridge chamber. The belt system is flexibly configured, so that it can be aligned with the barrels.

The belt system may receive traditional munition, but also be an integral part of the munition. The case bottom of the munition may close (or seal) the belt element in the aforementioned case. In this case, the cartridge may support the formation of cartridge chambers; the cartridge material is also taken into account during the configuration of the belt element. Alternatively, it is possible for the belt element to have a closed bottom. In this case, the propellant charge and the bullet could then be introduced into the belt element during assembly. Each belt element can therefore receive the entire munition (cartridge = casing + cartridge bottom) or parts thereof (propellant charge + bullet). In the latter case, the igniting structure for the munition must then be incorporated in the bottom of the belt element. The casing and also the belt element bottom act simultaneously as a seal for the cartridge chamber rearwards to the breach. It is clear that the bullet is located within the belt element and does not form an interfering edge. The cartridge receiving means or else the belt element itself may be

metallic and/or non-metallic in nature, for example made of steel and/or plastic.

This belt system is guided between the barrels and a breech of the weapon, in order to feed the munition located in the belt elements to one of the barrels. In order to receive the belt elements, two counter-rotatable stars are incorporated which, for their part, have on their periphery a number of (half) shells corresponding to the number of barrels. They both enclose the belt element fed in each case.

The incorporation of a so-called rotating breech – similar to an open chamber breech system – comprising two stars which receive the belt element in a counter-rotating manner in the firing position has proved preferable. The rotating breech with its stars thereby supports the formation of the substitute cartridge chamber, in such a manner that it partially chambers the belt elements forming the cartridge chamber and thereby supports the cartridge chamber formed by the belt elements in terms of strength/function, the cartridge chamber reliably seals itself through the breech part of the rotating breech.

The fact that the belt element (with cartridge as well as without) assumes (assume) the function of a cartridge chamber, but only supports this, has a structural advantage during the structural configuration and also the practical implementation of the stars. Hence, the shells in the stars and also the stars themselves need not be 100% identical and match one another; small tolerances are therefore also justifiable from a functional viewpoint.

Parts of the rotating breech may be a fixed component of the cluster of barrels itself. Alternatively, however, it is also possible for the second star to be uncouplable from the cluster of barrels. In this case, a separable connection between the cluster of barrels and the star in the rotational axis is to be provided, via which the star and also the breech can be co-rotated.

Both stars are also used to transport the belt system. At least the second star forms an open chamber for receiving the belt element, wherein in the firing position both stars are positioned in relation to one another in such a manner that they enclose the belt

element which has adopted the firing position with the munition. The second star and the breech are, for their part, moved by the rotation of the cluster of barrels with said cluster of barrels. The movement of the second star also brings about a rotation of the first star. In order to support the transportation of the belt system, the first star may, however, likewise be operatively connected to the drive.

The rotation of the barrels into their firing position is preferably achieved by an electrical drive which acts on a circumferentially incorporated toothing of the cluster of barrels by way of an intermediate gearwheel, for example. The feeding and removal (transportation) of the belt system can be combined with this drive.

The munition is ignited by at least one firing pin located in the breech in a known manner. The belt system with the munition is continuously introduced into the weapon, the respective belt element is aligned with the corresponding barrel and the ignition mechanism (firing pin) in a manner aligned with one another, the firing pin is tensioned and the shot discharged. In this case, this variant requires a structural division of the star and the breech.

In an advantageous embodiment, the breech part of the weapon has a plurality of chambers for receiving a firing pin and is rotated along with the cluster of barrels. The actuation of the firing pin in each case takes place in a simple embodiment with the help of a stationary weapons plate with a cam which are configured in such a manner that they can release the firing pin aligned in the firing position and then move it back again into the inoperative position. Use of the rotating breech is also a possibility for this purpose.

So that the weapons system can work dynamically, it is provided that the belt element that keeps the munition in the firing position and also the breech part are turned by a short distance or angle together with the cluster of barrels or the barrel. This has the advantage that continuous firing is possible, since no downtime has to be observed. Shots can be fired during this time. For the belt system, weapon-fixed forced guidance may be incorporated in addition, which deflects the corresponding belt element in the rotational direction of the associated barrel.

A small arm is therefore proposed, in which the belt system or else the belt element of this system forms a substitute cartridge chamber, so that the belt or else the belt element forms the actual cartridge chamber of the weapon. The belt with the munition/cartridge located therein is supported by the weapon or the breech and thereby partially chambered. The rotating breech does not itself form a complete chamber, as a gap is created by the belt system where the belt passes through. This partial chamber is therefore slightly open on the sides, but it is closed by the belt elements. The cartridge chamber created by the belt element therefore forms a substitute barrel. This is therefore a transportable cartridge chamber. It is functional as such, even without the stars. It is clear that the material and also the size of the belt element and the belt system has to be selected depending on the calibre size, so that delivery of a cartridge chamber can be taken on and the propellant gases can be taken up in a non-destructive manner.

The multiple-barrel weapon can not only be located in the small-calibre weapons range (approx. 9 mm), but also in the medium-calibre range.

The invention is to be explained in greater detail with the help of a preferred exemplary embodiment with drawings. In the drawings:

Fig. 1 shows a multiple-barrel weapon according to the invention in a perspective front view,

Fig. 2 shows the multiple-barrel weapon in a perspective rear view,

Fig. 3 shows a sectional representation of the multiple-barrel weapon along the munition feed in section A-A from Fig. 2,

Fig. 4 shows a cross-sectional representation of the multiple-barrel weapon along section B-B from Fig. 1,

Fig. 5 shows a possible variant for rotation of the cluster of barrels.

Fig. 1 shows a multiple-barrel weapon 1 with six barrels 2 in this case. The barrels 2, for their part, are held rotatably about the rotational axis D in the form of a cluster of barrels 20 in a front part of the weapon. Furthermore, the weapon 1 is characterized by a preferably electrical drive 3. In belt elements 4 of the belt feed 5, cartridges 6 (munition, bullets, etc.) are stored or are kept therein. The belt feed 5 in this case runs into an opening 7 in the weapon 1 and out again at the preferably opposite opening 8 without a bullet 6.2 but in this embodiment with the remaining casings 6.1. The weapon 1 has a weapons housing 21 which preferably holds all subassemblies of the weapon 1.

The individual belt element 4 in this case may have a non-metallic material as the outer casing 4.1, such as plastic for example. The inner layer 4.2 of the belt element 4 may be made of copper, brass, steel, titanium, aluminium, etc., that is to say metallic materials or coatings thereon. It is likewise possible for the inner layer and also the outer layer to be made of a material in the form of a metallic material, for example.

Fig. 2 shows the same weapon 1 from the rear perspective. A breech part 9 of the weapon 1 is characterized in the rear part of the weapon housing 10. The breech part 9 has multiple firing pins 11 in the preferred embodiment which, in the same number as the weapon barrels 2, are aligned therewith, wherein a firing pin 11 is assigned to each weapon barrel 2. The breech part 9 is turned with the firing pins 11 in this case in the same direction at the same frequency as the cluster of barrels 20. In a preferred embodiment, a rotating breech comprising two stars 12, 13 is incorporated, wherein the second star 13 and the breech part 9 form a structural unit. In this way, a reliable orientation of the firing pin 11 with the belt elements 4 is possible, mechanical coordination between the second star 13 and the breech part 9 can be dispensed with.

Fig. 3 shows a cross section through the weapon 1. As can clearly be seen, the belt elements 4 are guided through the opening 7 into the weapon 1. When the corresponding belt element 4 reaches the predetermined firing position, a first star 12 and also a second star 13 bear against the belt element 4. In this situation, the belt element 4 creates the cartridge chamber 22 of the weapon 1. This belt element 4 is supported by the shells 12.1 and 13.1 of the two stars 12 and 13, so that the belt

element 4 is able to take over the operation of a cartridge chamber.

Fig. 4 shows a further cross section through the weapon 1. The munition or the cartridge 6 with the belt element 4 is brought into alignment with one of the weapon barrels 2. The firing pin 11 aligned with this barrel 2 is released and taps the priming cap of the cartridge 6. The bullet 6.2 leaves the belt element 4 and passes through the barrel 2. The barrel 2 in each case and the belt element 4 and also the breech 9 can be moved with one another over a short distance, which makes the receiving of the belt element 4 with alignment with the barrel 2 and also the leaving of the belt element 4 from the alignment with the barrel 2 easier.

Actuation of the firing pin 11 takes place in a basic design through a ring with cam or a free space (not shown in greater detail), as a result of which the firing pin 11 can be tensioned and also released.

Fig. 5 reflects a possibility for rotating the cluster of barrels 20. In this case, the drive 3 with its gearwheel 3.1 acts on the toothing 24 of the cluster of bundles 20 via an additional gearwheel 23. The cluster of barrels 20 may be fixedly and also releasably connected to the star 13 of the rotating breech, wherein this star 13 may, alternatively, also be a fixed component of the cluster of barrels 20. With the movement of the star 13, not only is the breech 9 rotated, but also the belt system 5 is drawn into the weapon 1. Also connected to this in a simple embodiment is the rotation of the first star 12. However, a rotational support by the first star 12 is preferred, wherein the first star 12 is driven by the external drive 3 for this purpose, preferably even by the gearwheel 23 which rotates the cluster of barrels 20.

PATENTKRAV

1. Multirørsvåben (1) med et bæltesystem (5) og bælteled (4) til tilførsel af en ammunition (6) samt et løbsbundt (20) med flere løb (2) og en lukkedel (9) med i det mindste en slagstift (11) til udløsning af ammunitionen (6) samt en separat drivmekanisme (3) til drejning af i det mindste løbsbundtet (20), hvor bælteleddet (4) danner et reservepatronkammer (22) som våbenets (1) patronkammer mellem løbsbundets (20) respektive løb (2) og lukkedelen (9), hvor bælteledsmaterialet vælges således, at det kan overtage et patronkammers funktion, **kendetegnet ved, at** to stjerner (12, 13) er ansvarlige for transporten af bæltesystemet (5), idet stjernernes (12, 13) skåle (12.1, 13.1) delvis inddeler bælteleddet (4) i kamre i affyringspositionen.

2. Multirørsvåben ifølge krav 1, **kendetegnet ved, at** bælteleddet (4) er udformet af metallisk og/eller ikke metallisk materiale samt kombinationer deraf.

3. Multirørsvåben (1) ifølge krav 2, **kendetegnet ved, at** bælteleddet (4) som udvendig indkapsling (4.1) udviser et ikke metallisk materiale, hvor et indvendigt lag (4.2) af bælteleddet (4) består af kobber, messing, stål, titan, aluminium etc., altså metalliske materialer hhv. belægninger.

4. Multirørsvåben ifølge et af kravene 1 til 3, **kendetegnet ved, at** bælteleddet (4) ikke kun optager ammunitionen (6), men også er en del af ammunitionen (6).

5. Multirørsvåben (1) ifølge krav 4, **kendetegnet ved, at** bælteleddet (4) har en lukket bund.

6. Multirørsvåben (1) ifølge krav 5, **kendetegnet ved, at** der i bælteledsbunden er integreret en antændingsstruktur til ammunitionen (6).

7. Multirørsvåben ifølge et af kravene 1 til 6, **kendetegnet ved, at** der er integreret en valselukning, der udviser de to stjerner (12, 13) samt lukkedelen (9).

8. Multirørsvåben ifølge et af kravene 1 til 7, **kendetegnet ved, at** der er integreret flere slagstifter (11) i lukkedelen (9), svarende til antallet af løb (2).

9. Multirørsvåben (1) ifølge et af kravene 1 til 8, **kendetegnet ved, at** bæltetilførslen (5) løber ind i en åbning (7) i multirørsvåbenet (1) og ud igen ved en modsatliggende åbning (8).

10. Multirørsvåben ifølge krav 9, **kendetegnet ved, at** lukkedelen (9) med slagstiften (11) drejes i samme retning med løbsbundtet (20) i samme frekvens.

11. Multirørsvåben ifølge et af kravene 1 til 10, **kendetegnet ved, at** bælteleddet (4), der holder ammunitionen (6) i skudpositionen, og også lukkedelen (9) drejes med en kort strækning eller vinkel sammen med løbsbundtet (20) hhv. løbet (2).

12. Multirørsvåben ifølge et af kravene 1 til 11, **kendetegnet ved, at** drivmekanismen (3) via et yderligere tandhjul (23) tager fat på en omkredsfortanding (24) af løbsbundtet (20).

13. Multirørsvåben ifølge et af kravene 1 til 12, **kendetegnet ved, at** løbsbundet (20) er forbundet både fast og aftageligt med valselukningens stjerne (13), idet denne stjerne (13) også selv er en fast bestanddel af løbsbundtet (20).

14. Multirørsvåben ifølge et af kravene 1 til 13, **kendetegnet ved, at** den første stjerne (12) til transportunderstøtning af bæltesystemet (5) kan forbindes med drivmekanismen (3).

15. Multirørsvåben (1) ifølge et af kravene 1 til 14, **kendetegnet ved, at** drivmekanismen (3) er en elektrisk drivmekanisme.

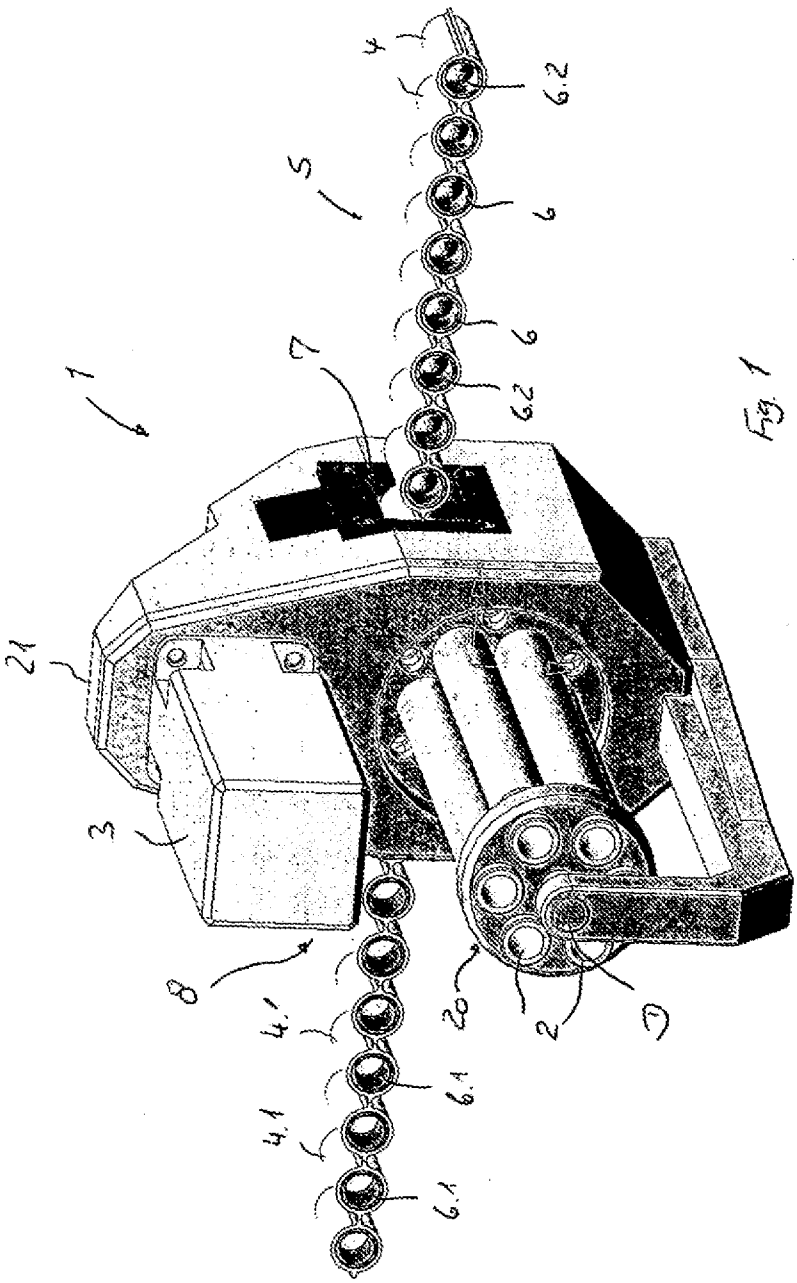

Fig. 1

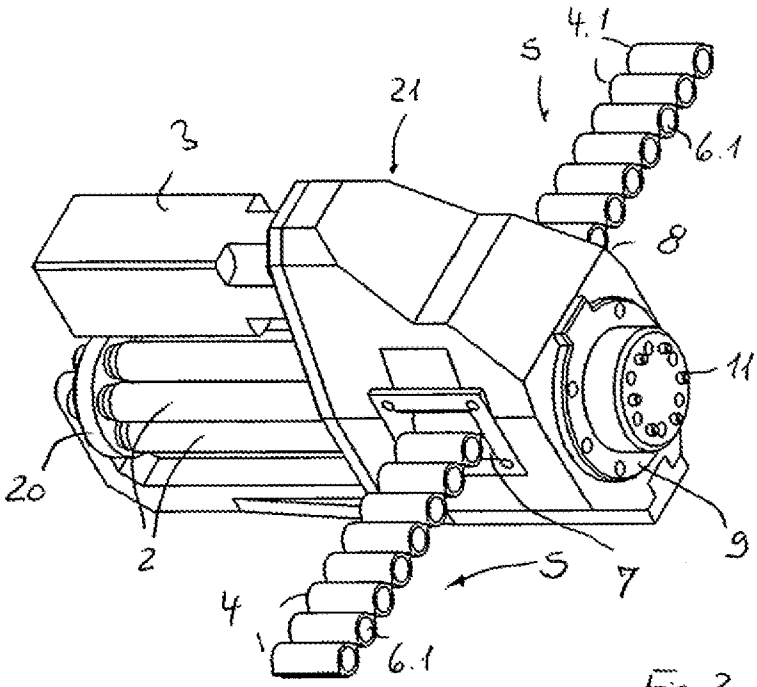

Fig. 2

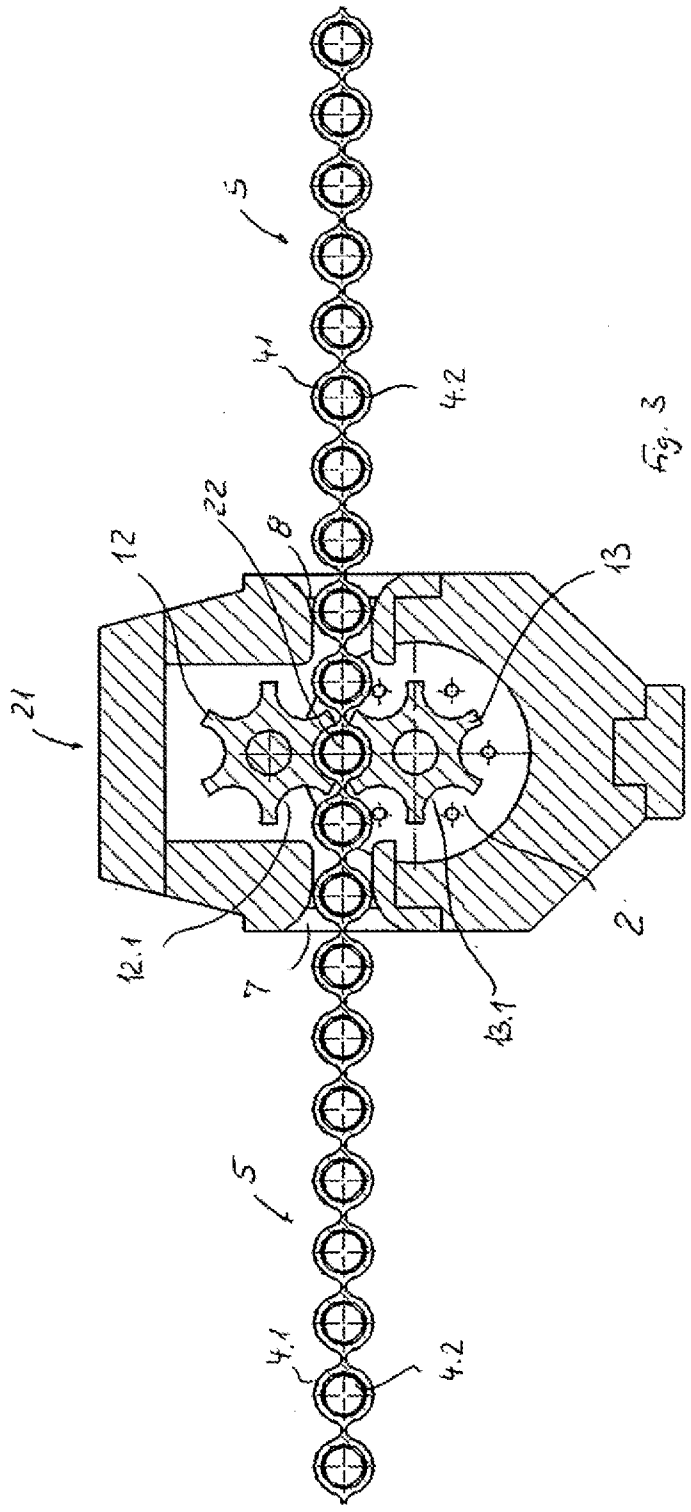

Fig. 3

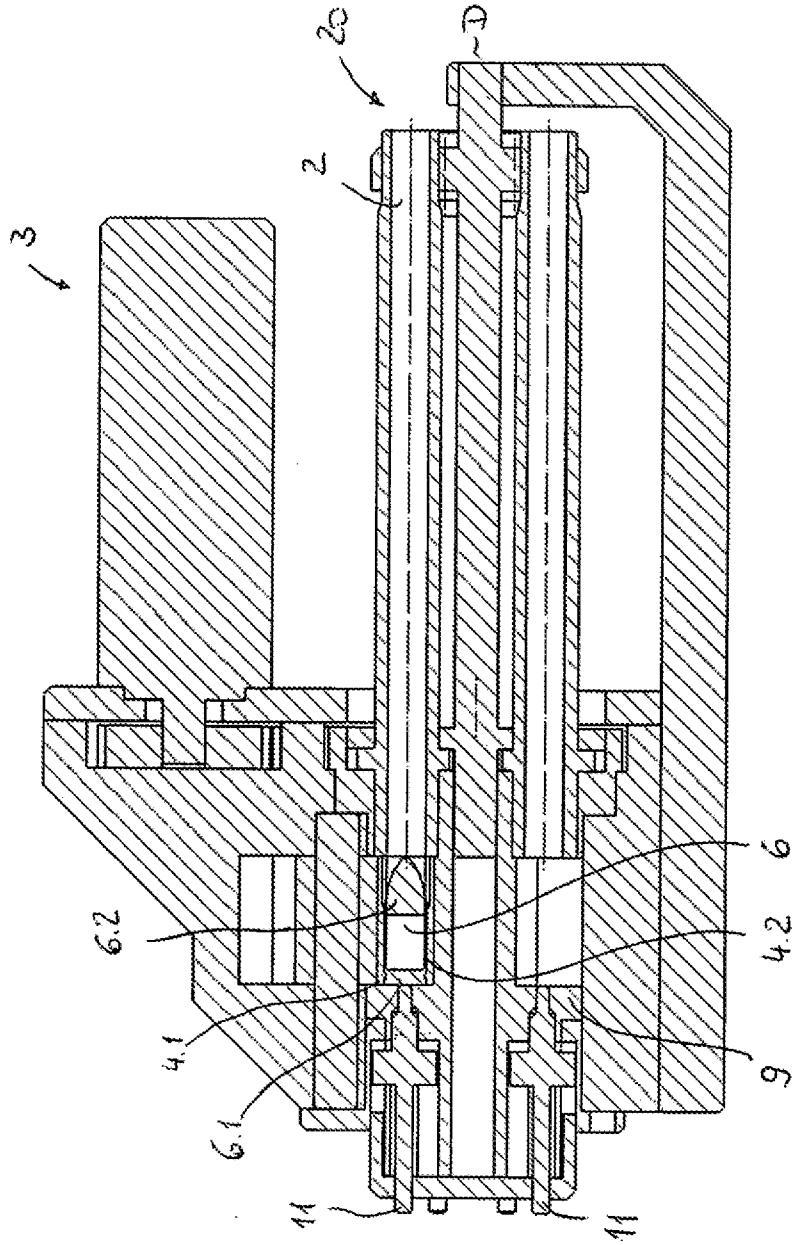

Fig. 4

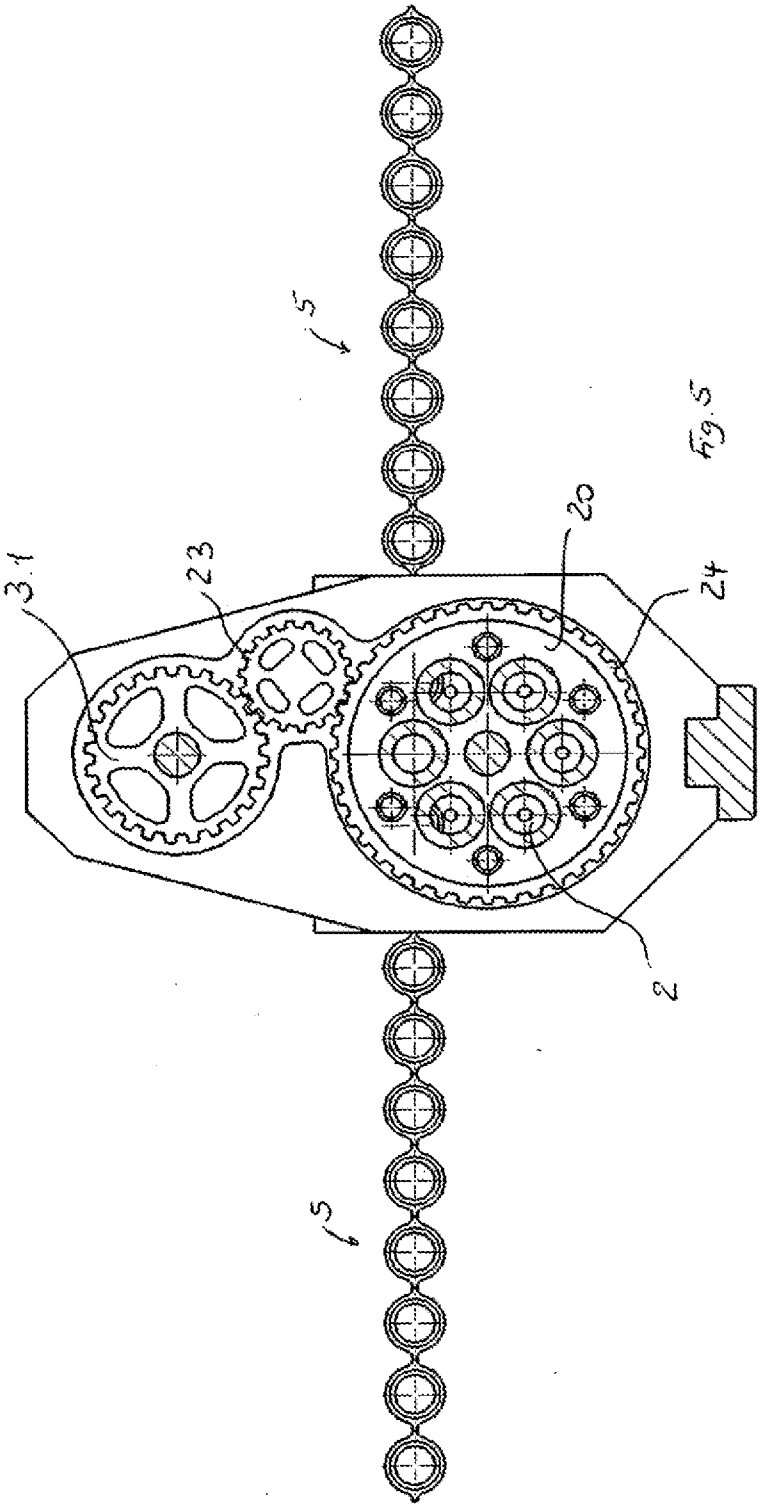

Fig. 5