C. C. MITCHELL.

LAUNDRY MARKING MACHINE.

APPLICATION FILED APR. 21, 1916.

1,241,417.

Patented Sept. 25, 1917.

4 SHEETS—SHEET 1.

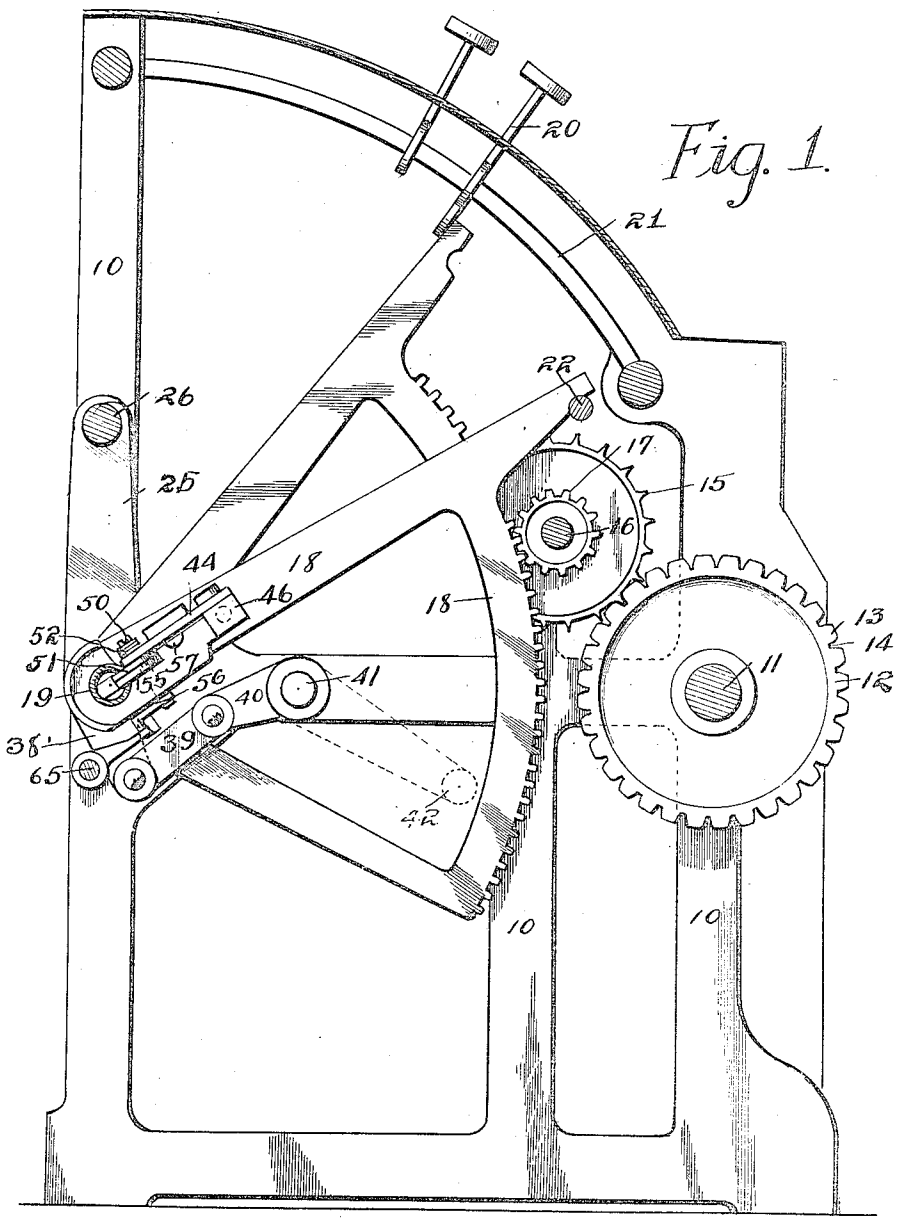

Fig. 1.

Witnesses

A. G. Hagner.

Will Freeman

Inventor

Clarence C Mitchell

by Owing & Bair Attys

C. C. MITCHELL.

LAUNDRY MARKING MACHINE.

APPLICATION FILED APR. 21, 1916.

1,241,417.

Patented Sept. 25, 1917.

4 SHEETS—SHEET 2.

Fig. 3.

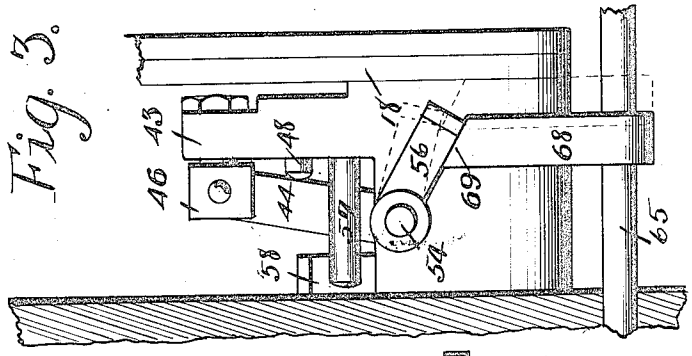

Fig. 2.

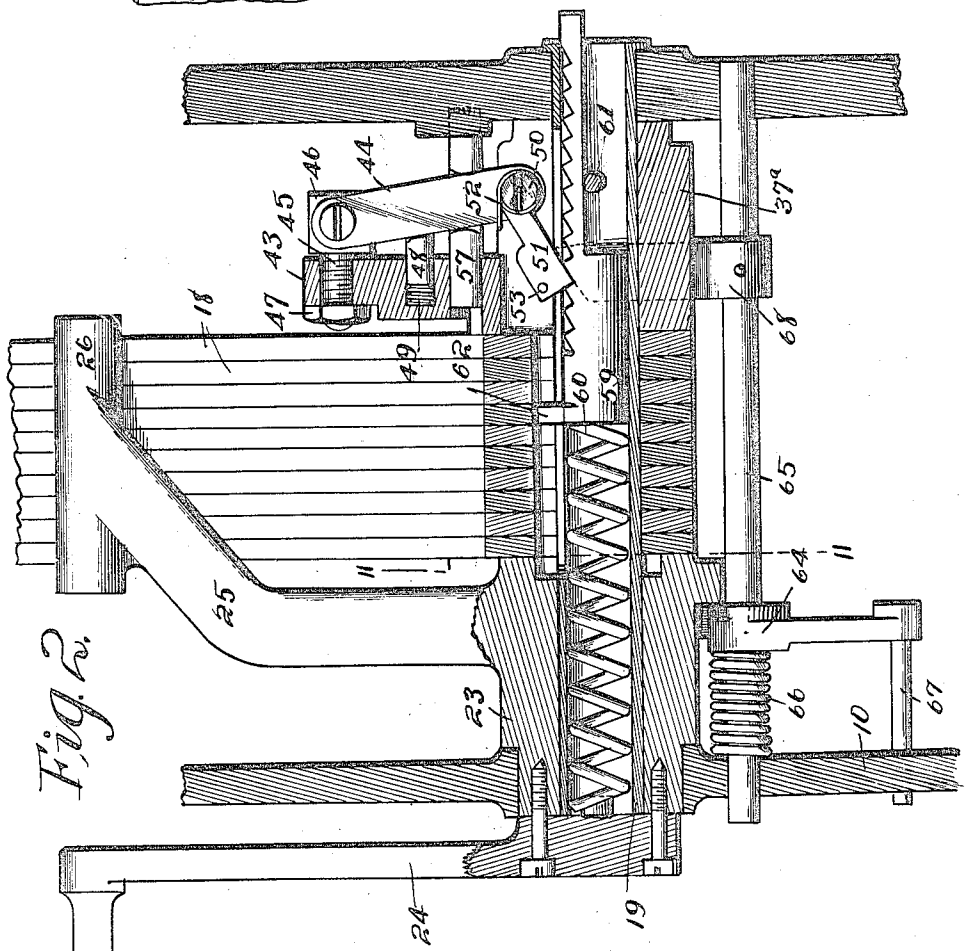

Witnesses

A. G. Hague.

Will Freeman.

Inventor

Clarence C Mitchell

by Craig & Bair Atty's

C. C. MITCHELL.

LAUNDRY MARKING MACHINE.

APPLICATION FILED APR. 21, 1916.

1,241,417.

Patented Sept. 25, 1917.

4 SHEETS—SHEET 3.

Fig. 7.

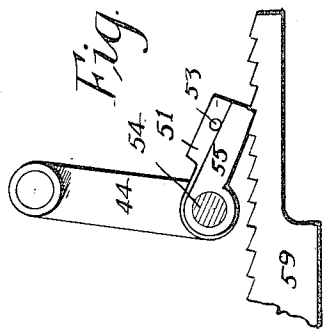

Fig. 6.

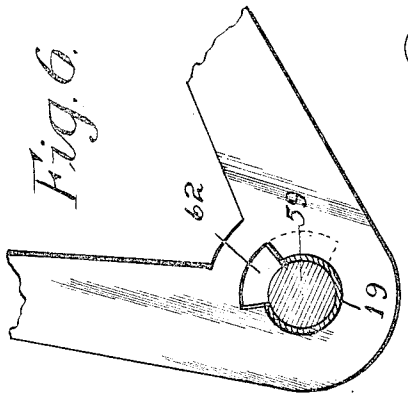

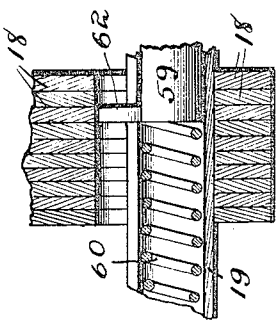

Fig. 5.

Fig. 4.

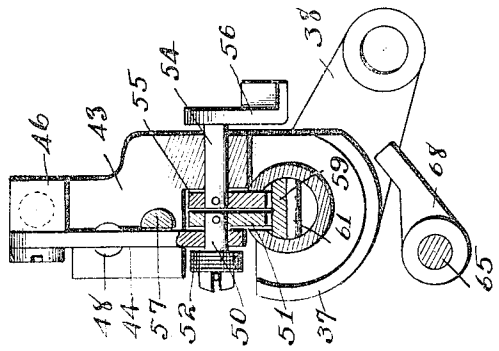

Witnesse
A. J. Hague.
Nell Freeman

Inventor
Clarence C. Mitchell
by Craig & Bair Attys.

C. C. MITCHELL.

LAUNDRY MARKING MACHINE.

APPLICATION FILED APR. 21, 1916.

1,241,417.

Patented Sept. 25, 1917.

4 SHEETS—SHEET 4.

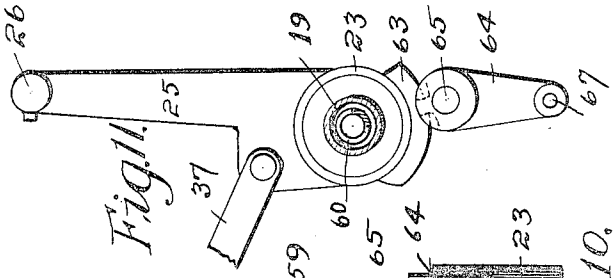

Fig. 11.

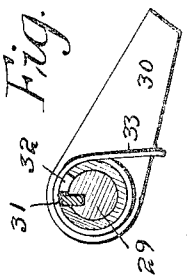

Fig. 9.

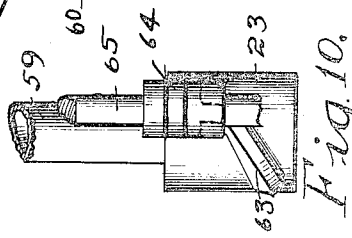

Fig. 10.

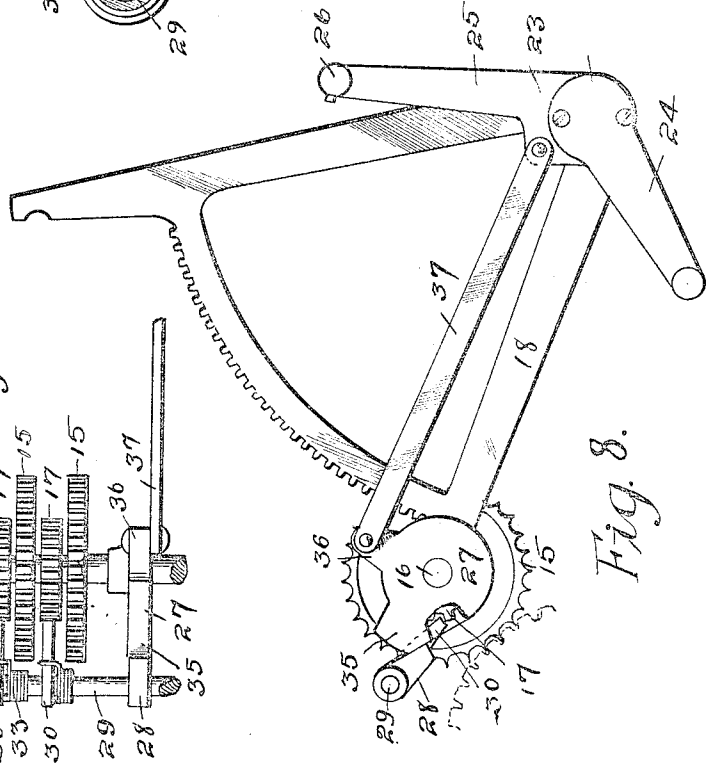

Fig. 8.

Fig. 12.

Witnesses

A. L. Hagus

Will Freeman

Inventor

Clarence C. Mitchell

by Craig & Burs Att'ys

UNITED STATES PATENT OFFICE.

CLARENCE C. MITCHELL, OF CINCINNATI, OHIO, ASSIGNOR TO THE NATIONAL MARKING MACHINE COMPANY, OF CINCINNATI, OHIO.

LAUNDRY-MARKING MACHINE.

1,241,417. Specification of Letters Patent. Patented Sept. 25, 1917.

Application filed April 21, 1916. Serial No. 92,683.

To all whom it may concern:

Be it known that I, CLARENCE C. MITCHELL, a citizen of the United States, and resident of Cincinnati, in the county of Hamilton and State of Ohio, have invented a certain new and useful Laundry-Marking Machine, of which the following is a specification.

My invention relates to and consists in certain improvements upon laundry marking machines of the general class illustrated and described in patent application No. 863,996, filed September 28, 1914, by Clarence C. Mitchell.

In machines of this class there are a number of type wheels, each bearing all of the characters for which the machine is designed, for instance all of the letters of the alphabet and the numerals 0 to 9 inclusive. There is, however, only one set of keys bearing the symbols corresponding to those applied on each type wheel, and there is also a means for setting any one of the type wheels in position with the selected type in the proper place for printing. Obviously, therefore, some means must be provided for successively setting the various type wheels in selected positions, which positions are controlled or determined by the type keys. In machines of this kind, therefore, it is necessary that there be some sort of an escapement or feeding device for progressively connecting the keys and the type wheel operating devices with the respective type wheels, and it is also necessary that some means be provided for quickly and easily returning all of the type wheels to normal position after completing a printing operation.

My object is to provide improved means of simple, durable and inexpensive construction, whereby the keys may be progressively connected with the type wheels through the means for operating the type wheels, in a convenient, facile and economical manner, and further to provide improved means for readily, quickly and easily returning all of the type wheels to normal position.

My invention consists in the construction, arrangement and combination of the various parts of the device, whereby the objects contemplated are attained, as hereinafter more fully set forth, pointed out in my claims, and illustrated in the accompanying drawings, in which:

Figure 1 shows a vertical, sectional view of parts of a laundry marking machine, for the purpose of illustrating the location and arrangement of my improvement relative to the keys and type wheels thereof.

Fig. 2 shows a detail, sectional view through the hollow shaft of the escapement device and connected parts.

Fig. 3 shows a detail view illustrating the means for releasing the pawls from the rack bar to permit the return of the rack bar to normal position before returning all of the type wheels to normal position.

Fig. 4 shows a sectional view on the line 4—4 of Fig. 2.

Fig. 5 shows a detail, sectional view, illustrating the lug on the rack bar for engaging the type wheel operating segments.

Fig. 6 shows a detail view illustrating a part of one of the type wheel operating segments and the rack bar and its lug connected therewith. The dotted lines show the position of the lug when at its downward limit of movement.

Fig. 7 shows an enlarged, detail view illustrating the pawls and the rack bar.

Fig. 8 shows a detail view illustrating the means for automatically rotating the type wheels back to normal position after a printing operation has been completed.

Fig. 9 shows an enlarged, detail view illustrating the spring actuated pawl forming part of the mechanism for returning the type wheels to normal position.

Fig. 10 shows an enlarged, detail view illustrating the cam device for releasing the pawls from the rack bar.

Fig. 11 shows a detail view of part of the mechanism for returning the type wheels to normal position.

Fig. 12 shows a detail view of part of the mechanism.

Referring to the accompanying drawings, I have used the reference numeral 10 to indicate generally the frame of the machine. Near the front of the frame is a stationary shaft 11 upon which are rotatably mounted the type wheels 12. There may be any desirable number of these type wheels, but in the present instance I have illustrated mechanism for operating ten of these type wheels. Each type wheel has on its periphery a number of type faces 13 with notches 14 between them.

These type wheels are set to proper position each independently of the others by

means of pinions 15 having teeth thereon to enter the notches 14. These pinions are rotatably mounted on a shaft 16, and each of these pinions 15 has a small pinion 17 fixed to it.

For operating the small pinions 17 I have provided a series of toothed sectors 18 meshed with the pinions 17. These sectors, as will be seen on reference to Fig. 2, are independently rotatable on the hollow shaft 19 at their rear ends.

The operation of this part of the device is as follows: When any of the sectors 18 is moved upwardly and toward the rear of the machine, the pinion 17 is rotated, which causes the pinion 15 to rotate with it and the rotation of the pinion 15 effects the corresponding rotation of the corresponding type wheel, so that if the sector is moved up a distance corresponding to one type space on the type wheel a certain predetermined type will be moved to printing position and as the sector continues its movement upwardly and rearwardly other types of the type wheel are moved to printing position.

My present invention has nothing to do with the means for determining the length of movement of the sectors, but for the purpose of obtaining an understanding of the general operation of this particular type of laundry marking machines, I have illustrated a means for stopping the upward and rearward movement of the sectors at any predetermined position, as follows: The reference numeral 20 indicates a series of key bars which are mounted for up and down movement on a curved rod 21. When any of these keys is depressed it will be projected into the path of all of the sectors 18, as shown in Fig. 1, thus limiting the movement of the sector and thereby determining the position of the type wheel. The downward movement of all of the sectors is limited by a stationary rod 22 extended across the front of the machine.

After the type wheels have all been set to the desired position for printing and the printing operation from the selected type has been effected, it is then desirable to quickly return all of the type wheels to normal position. For this purpose I have provided the following mechanism. Rotatably mounted upon the hollow shaft 19 is a hub 23 capable of being operated by a crank 24 attached to it. This hub has an arm 25 fixed to it, and this arm has a cross bar 26 on its upper end, which cross bar is capable of engaging the rear faces of all of the sectors 18, as clearly shown in Fig. 2, so that a movement of the crank 24 will operate the arm 25 in a direction tending to push all of the sectors downwardly and forwardly to normal position.

In order that all of the type wheels when moved to selected positions may be accurately alined for printing purposes, it is necessary that some means be provided for holding the type wheels after they have been moved to printing position. For this purpose I have rotatably mounted on the shaft 16 a disk 27. Mounted in front of the shaft 16 is a rotatable shaft 29 mounted in suitable bearings not shown. Fixed to this shaft 29 is an arm 28 for purposes hereinafter made clear. Rotatably mounted upon the shaft 29 is a series of pawls 30, each of which has its movement on the shaft 29 limited by means of the key 31 operating in a slot 32 formed in the pawl 30. A spring 33 is provided for each pawl tending to hold it toward the corresponding pinion 17. By this arrangement the pinion 17 is always held in position with the pawl 30 accurately positioned in one of the notches between the teeth of said pinion 17.

It is obvious that before the sectors can be returned to their normal positions, these pawls must be released. For this purpose I have provided on the disk 27 a cam 35 designed to engage the arm 28 and move it in such a direction that it will rock the shaft 29 and thus withdraw all of the pawls 30 from their engagement with the pinions 17. For the purpose of moving the disk 27 I have provided on the disk an arm 36 connected with the link 37, which link has its other end pivoted to the hub 23 so that when the crank 24 is moved the first part of the movement will rotate the disk 27 and thus release the pawls, and then when the pawls are released a further movement will cause the arm 25 to engage all of the sectors and return them to normal position.

This movement of the crank 24 performs an additional function, to wit that of returning to normal position the escapement device hereinafter described. For convenience in understanding the structure, the mechanism by which the escapement is released and returned will be described herein after the description of the escapement device.

My improved escapement device comprises a hub 37^a rotatably mounted upon the hollow shaft 19 and having an arm 38 extended downwardly and forwardly. This arm is connected by a link 39 with a crank arm 40 rotatably mounted on the shaft 41 and provided with a crank 42 illustrated by dotted lines in Fig. 1, whereby a downward movement of the crank 42 will move the arm 38 upwardly.

Extending upwardly and forwardly from the hub 37^a is an arm 43, for the purpose of supporting the escapement pawl operating lever 44. This lever is pivoted to the arm 43 as follows: A screw-threaded rod 45 is seated in the arm 43 and is provided with the head 46 to which the lever 44 is pivoted. This screw-threaded rod 45 is provided with

a lock nut 47 whereby it may be secured in any position of its adjustment. By this means the head 46 may be adjusted toward and from the arm 43 for the purpose of compensating for wear of the parts connected with this lever.

The lower end of the lever is yieldingly held to one limit of its movement by means of a slide bar 48 mounted in the arm 43 and held in one position by a spring 49. The outer end of this slide bar 48 engages the lever 44.

Rotatably mounted in the lower end of the lever 44 is a short shaft 50 having fixed to it a pawl 51. A spring 52 is wound upon this shaft 50 for holding the free end of the pawl downwardly. This pawl is provided near its free end with the stop pin 53.

Mounted in the arm 43 is a short shaft 54 in line with the shaft 50. This shaft 54 is provided with a pawl 55 fixed to it inside of the pawl 51, and extended under the stop pin 53, as shown in Fig. 7. On the other end of the short shaft 54 is an arm 56 for purposes hereinafter made clear. Mounted in the arm 43 is a slide rod 57 having a notch therein through which the lever 44 is extended. One end of this slide bar 57 is extended to position where it will engage an inclined cam surface 58 formed on the machine frame. These parts are so arranged that when the arm 43 is swung upwardly and rearwardly the slide bar 57 will engage the inclined cam surface 58 and thus move the slide bar in a direction toward the sectors, as illustrated in Fig. 2. This movement will swing the lower end of the lever 44 with its pawl in a direction toward the sectors.

Slidingly mounted within the hollow shaft 19 is a rack 59 yieldingly held toward the right, as shown in Fig. 2, by the spring 60, its movement in this direction being limited by the stop pin 61. This rack is engaged by both of the pawls 51 and 55. Each time that the lever 44 moves the rack 59 is advanced one tooth space by the pawl 51 and is there held by the pawl 55 so that when the lever 44 returns the pawl 55 will hold the rack 59 in position. This progressive movement of the rack 59 is continued until the rack 59 reaches its limit of movement in a direction toward the left, as shown in Fig. 2.

The hollow shaft 19 is slotted at its top, as shown in Fig. 2, to permit the pawls 51 and 55 to enter it and engage the rack bar, and it is also slotted adjacent to the sectors as shown in Figs. 5 and 6. On the end of the rack bar 59 is a lug 62 projected through the slot in the hollow shaft 19, and capable of sliding longitudinally through a corresponding notch formed in each of the sectors. The thickness of this lug 62 substantially corresponds to the thickness of one of the sectors, so that when it is in the position shown in Fig. 5 and the rack bar 59 is rocked, the said lug will engage the corresponding sector and move it. In this connection it is to be understood that the teeth of the rack bar are so proportioned in size in relation to the thickness of the sectors that each movement of the pawl 51 will advance the rack bar 59 to position which moves the lug 62 from position where it will engage one sector to position where it will engage the next sector.

The operation of this part of the device is as follows: When the crank 42 is moved outwardly the first part of the movement causes the pawl 51 to advance the rack bar 59 one tooth space, then the next part of the movement causes the lug 62 to engage the adjacent sector and move it upwardly until it is stopped in its movement by one of the key levers. The other pawl 55 serves to prevent any backward movement of the rack bar.

In order to return the rack bar to normal position just prior to the return of all of the sectors to normal position, I have provided the following mechanism: Mounted upon the hub 23 is a spiral cam 63 which is in engagement with an arm 64. This arm is fixed to a sliding shaft 65, there being a spring 66 normally tending to hold this shaft to the right, as shown in Fig. 2. Connected to the arm 64 is a guide rod 67 slidingly mounted in the frame 10, which serves to prevent any rotation of the arm 64. Fixed to the slide rod 65 is an arm 68 having an inclined upper surface at 69, as shown in Fig. 3. Its inclined upper surface is arranged in the path of the arm 56 when the hub 37^a is in its normal position. In this connection it is to be noted that in Fig. 4 the hub 37^a is at its rearward limit of movement. When in normal position this hub 37^a is in such position that the arm 56 would be in position adjacent to the arm 68, as shown in Fig. 3 and not as shown in Fig. 4. When the rod 65 is moved longitudinally, the inclined end 69 thereof will engage the arm 56 and move it forwardly, as shown by dotted lines in Fig. 3, which will cause the pawl 55 to be withdrawn from the rack bar 59, and during this upward movement the pawl 55 will engage the pin 53 and thus move the pawl 51 upwardly out of engagement with the rack bar. This releases the rack bar 59 and its spring 60 causes it to instantly return to starting or normal position.

In practical operation and assuming that the machine is in its starting or normal position, then the operator selects the desired key for the first type wheel and depresses it. This moves one of the key levers 20 to position where it will be in the path of the sector when the latter is moved. He then

grasps the conveniently arranged handle 42 at the side of the machine and moves it downwardly through a relatively small range of movement. This causes first a movement of the rack bar 59 to position where it will engage the first one of the sectors corresponding to the first type wheel. The continued movement of the crank 42 moves the sector upwardly until it strikes the key lever. This causes the corresponding type wheel to be moved to position with the selected character in printing position. The operator then releases the crank 42 and depresses the type key which he has selected for the second type wheel. He then again grasps the crank 42 and moves it as before. This operation proceeds until all of the type wheels have been set to printing position. After the printing has been done from the type wheels, they are returned to normal position by manipulation of the crank 24 as before described.

One of the advantages of my improved mechanism for setting the type wheels to printing position is that it requires only a short movement of a conveniently located crank at the side of the machine. Furthermore, the parts have only a limited movement and are not subjected to excessive wear. If any adjustment for wear is necessary, this may be quickly and easily accomplished by a manipulation of the screw-threaded rod 45 and the lock nut 47.

The mechanism for returning the sectors to normal position is also of extremely simple construction and is operatable by a conveniently located crank at the side of the machine.

By mounting all of the sectors on a hollow shaft and by having the rack bar movable longitudinally in said hollow shaft and being provided with a lug to engage the sectors, the expense of construction of a device of this character is very greatly lessened and it is made very strong and durable. By adopting this principle the mechanism required for advancing the rack bar and arranging it can be made very simple and of few parts, the action of which is very convenient for the operator.

I claim as my invention:

1. In a machine of the class described, the combination of a series of sectors adapted to operate type wheel devices, a rack bar capable of movement successively to the several sectors, said rack bar also being capable of a rocking movement, means carried by the rack bar for successive engagement with the several sectors for moving them for the purpose of operating the corresponding type wheels, a handle, a pawl device operated by the handle for advancing the rack bar, and means also operated by the same handle for rocking the rack bar.

2. In a machine of the class described, the combination of a series of sectors adapted to operate type wheel devices, a rack bar capable of movement successively to position adjacent to each of the sectors, a device carried by the rack bar for engagement successively with each of the sectors, said rack bar also being capable of a rocking movement, a hub capable of a rocking movement, a pawl carried by said hub and in engagement with said rack bar, a crank for rocking the hub, and means carried by the hub whereby a rocking movement thereof will advance the said pawl to move the rack bar.

3. In a machine of the class described, the combination of a series of sectors adapted to operate type wheel devices, a rack bar capable of movement successively to position adjacent to each of the sectors, a device carried by the rack bar for engagement successively with each of the sectors, said rack bar also being capable of a rocking movement, a hub capable of a rocking movement, a pawl carried by said hub and in engagement with said rack bar, a crank for rocking the hub, means carried by the hub whereby a rocking movement thereof will advance the said pawl to move the rack bar, spring actuated means for returning the rack bar, and a second pawl for preventing a return movement of the rack bar during the operation of the first pawl.

4. In a machine of the class described, the combination of a series of sectors adapted to operate type wheel devices, a rack bar capable of movement successively to position adjacent to each of the sectors, a device carried by the rack bar for engagement successively with each of the sectors, said rack bar also being capable of a rocking movement, a hub capable of a rocking movement, a pawl carried by said hub and in engagement with said rack bar, a crank for rocking the hub, means carried by the hub whereby a rocking movement thereof will advance the said pawl to move the rack bar, spring actuated means for returning the rack bar, a second pawl for preventing a return movement of the rack bar during the operation of the first pawl, and means whereby when the second pawl is held out of engagement with the rack bar it will also hold the first pawl out of such engagement.

5. In a machine of the class described, the combination of a series of sectors adapted to operate type wheel devices, a rack bar capable of movement successively to position adjacent to each of the sectors, a device carried by the rack bar for engagement successively with each of the sectors, said rack bar also being capable of a rocking movement, a hub capable of a rocking movement, a pawl carried by said hub and in engagement with said rack bar, a crank for rocking the hub, means carried by the hub whereby a rocking movement thereof will

advance the said pawl to move the rack bar, spring actuated means for returning the rack bar, a second pawl for preventing a return movement of the rack bar during the operation of the first pawl, and means whereby when the second pawl is held out of engagement with the rack bar it will also hold the first pawl out of such engagement, means for operating said second pawl for releasing the rack bar whereby it may be returned to normal position by its spring, said latter means including a crank, and means connected with the crank for forcing the sectors back to normal position upon an operation of said crank for the release of said pawl from the rack bar.

6. In a machine of the character described, the combination of a series of sectors adapted to operate type wheel devices, a hollow shaft on which said sectors are rotatably mounted, said shaft having a slot at the end and said sectors having notches adjacent to the slot, a rack bar inside of said hollow shaft and having a lug to project through the slot in the hollow shaft and into the notches of the sectors, a pawl in engagement with the rack bar, and a device including a pawl in engagement with the rack bar, said device being arranged on its initial movement to advance the rack bar and upon further movement to rotate the rack bar.

7. In a machine of the character described, the combination of a series of sectors adapted to operate type wheel devices, a hollow shaft on which said sectors are rotatably mounted, said shaft having a slot at the end and said sectors having notches adjacent to the slot, a rack bar inside of said hollow shaft and having a lug to project through the slot in the hollow shaft and into the notches of the sectors, a pawl in engagement with the rack bar, a device including a pawl in engagement with the rack bar, said device being arranged on its initial movement to advance the rack bar and upon further movement to rotate the rack bar, and a crank for moving said device.

8. In a machine of the character described, the combination of a series of sectors adapted to operate type wheel devices, a hollow shaft on which said sectors are rotatably mounted, said shaft having a slot at the end and said sectors having notches adjacent to the slot, a rack bar inside of said hollow shaft and having a lug to project through the slot in the hollow shaft and into the notches of the sectors, a pawl in engagement with the rack bar, a device including a pawl in engagement with the rack bar, said device being arranged on its initial movement to advance the rack bar and upon further movement to rotate the rack bar, a crank for moving said device, and a second pawl in engagement with the rack bar for preventing a rearward movement of the rack bar when the first pawl is being operated.

9. In a machine of the character described, the combination of a series of sectors adapted to operate type wheel devices, a hollow shaft on which said sectors are rotatably mounted, said shaft having a slot at the end and said sectors having notches adjacent to the slot, a rack bar inside of said hollow shaft and having a lug to project through the slot in the hollow shaft and into the notches of the sectors, a pawl in engagement with the rack bar, a device including a pawl in engagement with the rack bar, said device being arranged on its initial movement to advance the rack bar and upon further movement to rotate the rack bar, a crank for moving said device, a second pawl in engagement with the rack bar for preventing a rearward movement of the rack bar when the first pawl is being operated, and means for disconnecting both of said pawls from the rack bar to permit a return movement thereof.

10. In a machine of the character described, the combination of a series of sectors adapted to operate type wheel devices, a hollow shaft on which said sectors are rotatably mounted, said shaft having a slot at the end and said sectors having notches adjacent to the slot, a rack bar inside of said hollow shaft and having a lug to project through the slot in the hollow shaft and into the notches of the sectors, a pawl in engagement with the rack bar, a device including a pawl in engagement with the rack bar, said device being arranged on its initial movement to advance the rack bar and upon further movement to rotate the rack bar, said rack bar advancing means comprising a lever, a spring for holding the lever to one limit of its movement, a slide bar connected to the lever for operating it, a stationary cam in the path of the slide bar for moving the slide bar and the lever, said lever having the said pawl attached to it, and a crank for imparting a rocking movement to said device.

11. In a machine of the character described, the combination of a series of sectors or type wheel operating devices, a rack bar capable of movement successively to position for engagement with any one of said sectors, a spring tending to return the rack bar to normal position, two pawls in engagement with the rack bar, connections between said pawls whereby when one of them is raised it will raise the other from engagement with the rack bar, and means for returning the sectors to normal position, comprising a hub, a cam on the hub, a slide bar operated by the cam, an arm carried by the slide bar and designed when moved to elevate one of said pawls, and an arm car-

ried by said hub for engagement with the sectors to return all of them to normal position after the pawls have been released.

12. In a machine of the character described, the combination of a series of sectors adapted to operate type wheel devices, a hollow shaft adapted to have the sectors rotatably mounted thereon, and provided with a slot adjacent to the sectors, a rack bar slidably received within the hollow shaft, a lug secured to the end of the rack bar and adapted to project through said slot to selectively engage each of the sectors, a spring adapted to yieldingly hold the rack bar at one limit of its motion, a pawl device adapted to move the rack bar step by step toward the other limit of its motion, a hub mounted on the hollow shaft, having a cam formed thereon, a crank adapted to operate said hub, and a slide bar operated from the cam and operatively connected with the pawl, whereby movement of the hub may release the pawls to permit the rack bar to be returned to the limit of its movement by the spring.

Des Moines, Iowa, June 26, 1915.

CLARENCE C. MITCHELL.

Witnesses:

EDWARD J. ARMBRUSTER,

WILLIAM SCHWAEGERLE.