E. T. BEYLE.

EMBALMING STAND.

APPLICATION FILED JULY 3, 1917.

1,261,755. Patented Apr. 9, 1918.

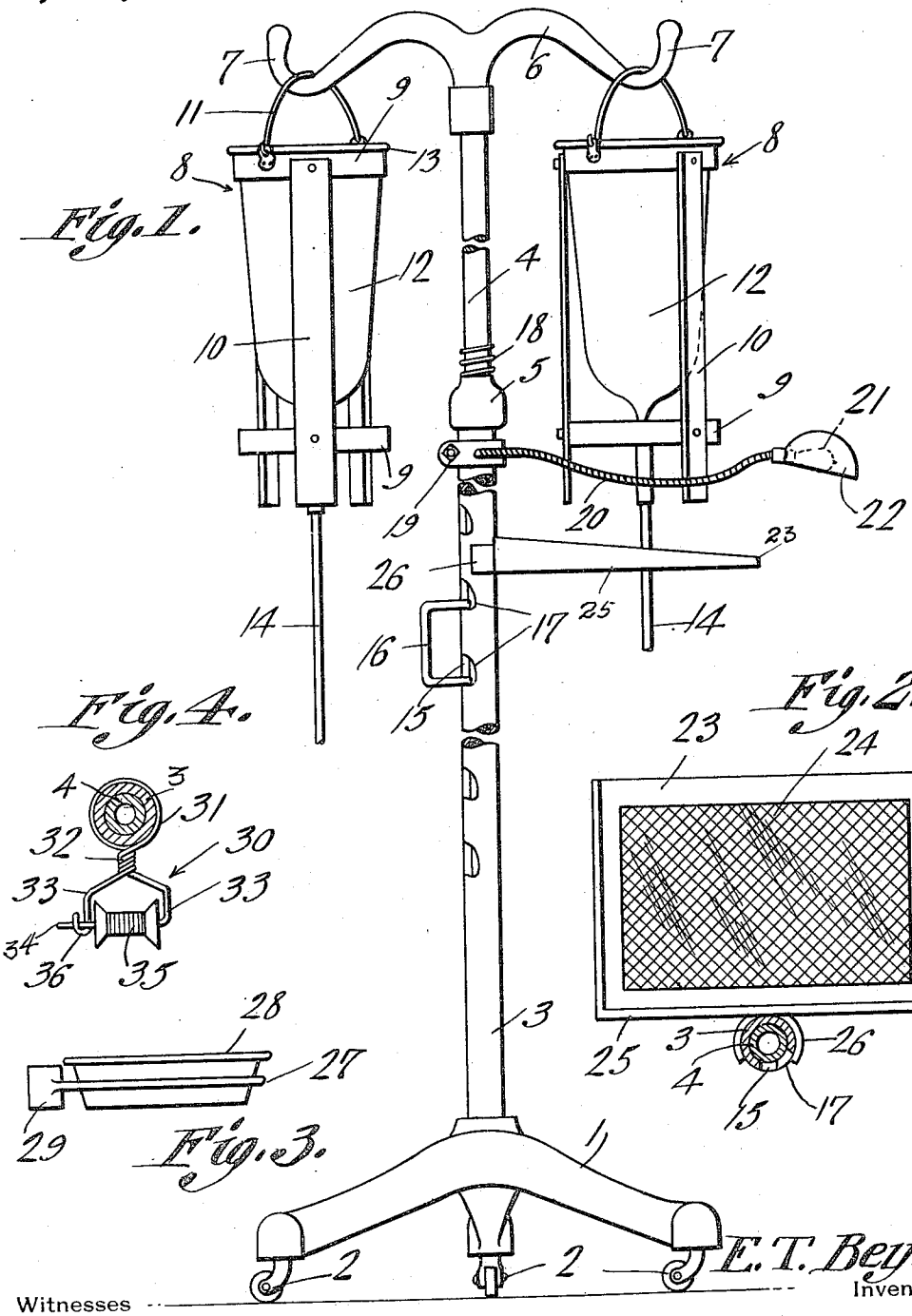


Fig. 1.




Fig. 4.




Fig. 3.




Fig. 2.




Witnesses

J. C. Fenning

H. A. Mitchell

E. T. Beyle
Inventor

by Cushman & Co
Attorneys

# UNITED STATES PATENT OFFICE.

ERWIN T. BEYLE, OF COLORADO SPRINGS, COLORADO.

## EMBALMING-STAND.

1,261,755. Specification of Letters Patent. Patented Apr. 9, 1918.

Application filed July 3, 1917. Serial No. 178,410.

*To all whom it may concern:*

Be it known that I, ERWIN T. BEYLE, a citizen of the United States, residing at Colorado Springs, in the county of El Paso and State of Colorado, have invented a new and useful Embalming-Stand, of which the following is a specification.

The present invention has for its object the provision of a novel and improved stand for use in embalming, and embodying adjustable means for supporting the receptacles or vessels for containing the embalming solution, the device also including an adjustable lamp, instrument tray, spool holder and receptacle holder.

With the foregoing and other objects in view, which will appear as the description proceeds, the invention resides in the combination and arrangement of parts and in the details of construction hereinafter described and claimed, it being understood that changes in the precise embodiment of the invention herein disclosed can be made within the scope of what is claimed, without departing from the spirit of the invention.

The invention is illustrated in the accompanying drawing, wherein:

Figure 1 is an elevation of the stand, portions being broken away.

Fig. 2 is a plan view illustrating the instrument tray.

Fig. 3 is a side elevation of a receptacle holder.

Fig. 4 is a plan view of the spool holder.

The stand embodies a suitable base 1, preferably mounted on casters 2 in order that it can be readily moved about on the floor, and this base carries a standard including the lower tubular section 3 having its lower end secured to the base, and an upper tubular section or rod 4 telescoping or fitting slidably within the section 3, a reducer 5 being secured upon the upper end of the section 3 to assist in guiding the section 4. Secured to the upper end of the section 4 is a T-head 6 forming a double bracket having the hooks 7 for suspending the embalming solution receptacles, as will presently appear.

Two holders 8 for the receptacles are employed, each embodying the upper and lower rings or hoops 9 to which are secured vertical bars 10, and a bail 11 is pivotally connected with the upper ring 9 to engage and seat in the respective hook 7 of the head, for supporting the holder. The embalming solution receptacle 12 is adapted to slip downwardly into the holder so that its rim 13 seats on the upper ring 9, thereby suspending the receptacle within the holder. The bars 10 project downwardly below the lower ring 9 and lower end or nipple of the receptacle 12, to support the holder on the floor, or table when removed from the stand. A rubber tubing 14 is connected to the lower nipple of the receptacle 12 for conveying the solution therefrom by gravity. One of the holders can be hung from each hook 7, to thereby suspend a pair of the receptacles 12 from the upper end of the standard, the standard being extensible in order that said receptacles can be raised to the desired height.

In order to raise and lower the standard section 4 and hold it in any desired position, the lower section 3 is provided with a longitudinal vertical slot 15, and a U-shaped handle 16 has its ends secured to the section 4 and working within the slot 15. The section 3 is provided along one edge of the slot with notches 17 to receive the terminals of the handle 16 when said handle is swung about the axis of the standard. Thus, when the handle 16 is within the slot 15, the section 4 can be raised and lowered conveniently and when the section 4 is moved to the desired position, the handle 16 can be swung to one side into the respective notches 17, for supporting the section 4. If desired, a coiled wire buffer spring 18 can be disposed around the section 4 on the reducer 5, for the contact of the head when the section 4 is completely lowered, thereby avoiding an injurious jar or shock.

In order to support an electric lamp from the standard, a clamp 19 of any suitable sort can be applied to section 3 of the standard for supporting a flexible bracket arm 20 carrying at its free end, an electric lamp 21 and shade 22 therefor, whereby the lamp and shade can be brought to the desired position and angle to facilitate the work when done at night.

The instrument tray embodies a suitable frame 23 having a panel 24, preferably of glass having reinforcing wire embedded therein, the frame 23 having an upstanding rim or flange 25 at its side and rear edges, and being provided at its rear edge with a suitable clamp 26 for attachment to the standard section 3 to support the tray therefrom on which the instruments are placed.

In order to support a receptacle or vessel

from the standard, there is provided a holder or ring 27 for said receptacle or vessel 28 placed therein, said ring having a clamp or attaching member 29 to engage the standard section 3, the same as the clamp or attaching member 26.

A spool holder 30, shown in Fig. 4, can also be applied to the standard, for holding a spool of thread to be used when embalming, this holder being bent from wire having the loop 31 to embrace the standard section 3, the twisted portion 32 and diverging portion 33 extending therefrom, one portion 33 having a spindle 34 to hold the spool 35, while the other portion 33 has a hook 36 for engagement of the spindle to retain the spool thereon.

This stand is of special utility for embalming purposes, rendering the operation more convenient.

Having thus described the invention, what is claimed as new is:

1. An embalming stand comprising a lower tubular section having a longitudinal slot provided with side notches; an upper section slidable in the lower section; a load-supporting bracket carried by the upper section and extended on opposite sides thereof; and a U-shaped handle comprising lateral parts secured to the upper section and movable in the longitudinal slot, the lateral parts of the handle being adapted to set in the notches, the U-shaped handle affording a secure grip, whereby a smooth sliding of the upper section in the lower section may be secured when the bracket is loaded unsymmetrically.

2. An embalming stand comprising a lower tubular section; a reducer on the upper end of the lower tubular section; an upper section slidable in the reducer and in the lower tubular section; means for adjusting the sliding movement of the upper section in the lower section; a bracket carried by the upper section; and a compression spring surrounding a portion of the upper section and abutting against the reducer, the spring constituting a cushion, and being engageable by the bracket, when the upper section moves downwardly to a point adjacent the limit of its travel, and when the bracket comes into contact with the upper end of the spring.

In testimony that I claim the foregoing as my own, I have hereto affixed my signature in the presence of two witnesses.

ERWIN T. BEYLE.

Witnesses:
M. W. PURCELL,
M. E. GILL.

Copies of this patent may be obtained for five cents each, by addressing the "Commissioner of Patents, Washington, D. C."