F. CONRATH.

OIL STOVE.

APPLICATION FILED DEC. 9, 1908.

954,422. Patented Apr. 12, 1910.

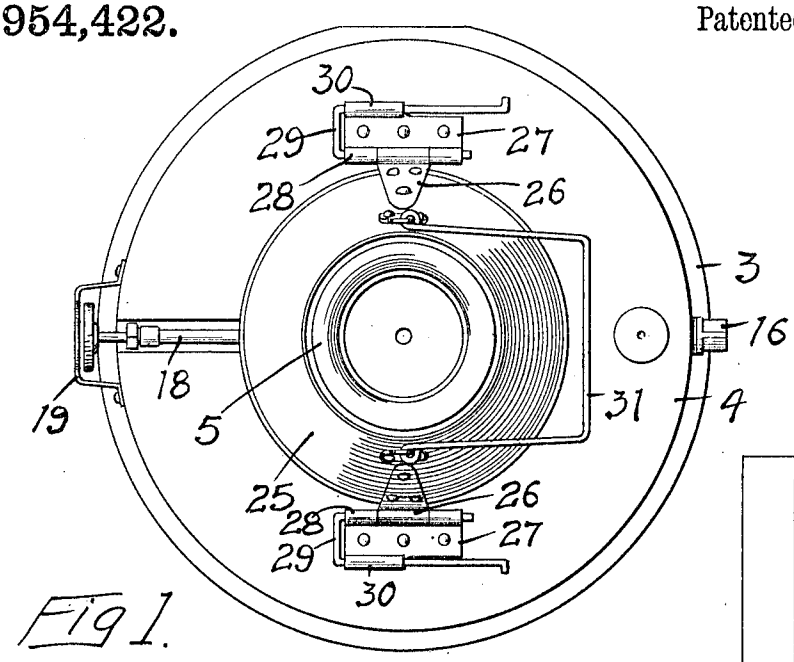

Fig 1.

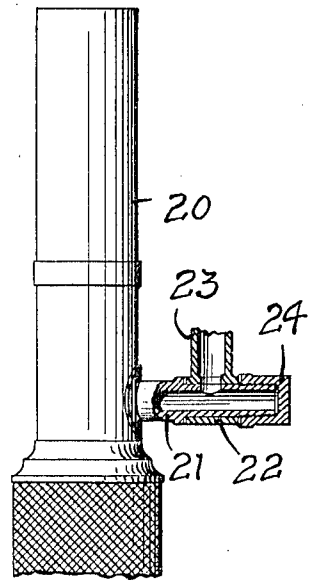

Fig 3.

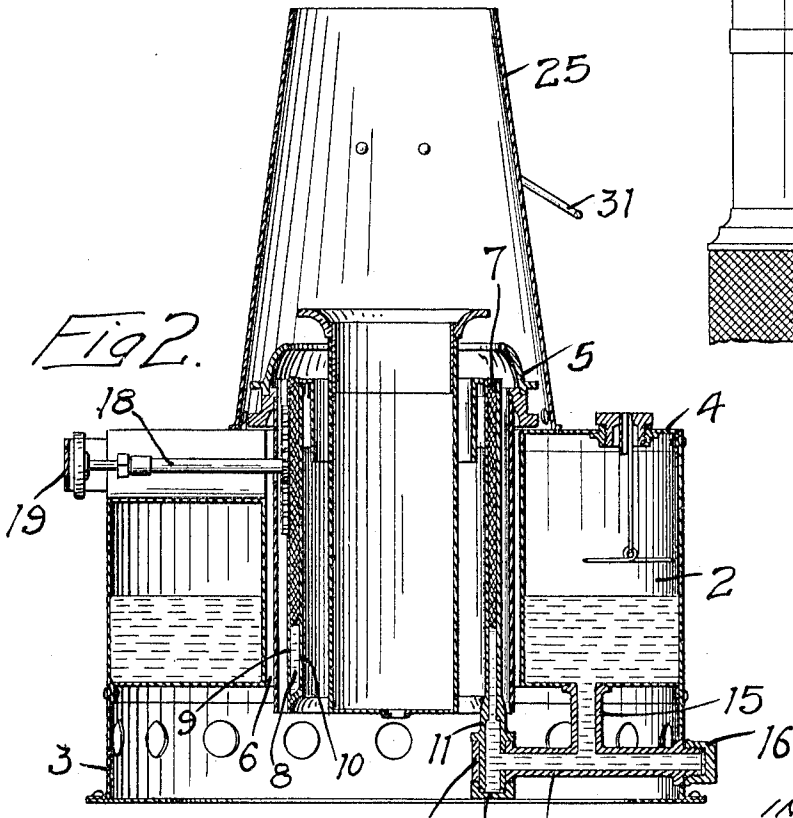

Fig 2.

WITNESSES

J. W. Walstrom

J. A. Bijington.

INVENTOR

FREDERICK CONRATH

BY Paul & Paul

HIS ATTORNEYS

ANDREW B. GRAHAM CO., PHOTO-LITHOGRAPHERS, WASHINGTON, D. C.

UNITED STATES PATENT OFFICE.

FREDERICK CONRATH, OF ST. PAUL, MINNESOTA.

OIL-STOVE.

954,422. Specification of Letters Patent. Patented Apr. 12, 1910.

Application filed December 9, 1908. Serial No. 466,639.

To all whom it may concern:

Be it known that I, FREDERICK CONRATH, of St. Paul, Ramsey county, Minnesota, have invented certain new and useful Improvements in Oil-Stoves, of which the following is a specification.

My invention relates to oil stoves or heaters used in freight cars containing vegetables or fruit to prevent them from freezing in transit and the object of the invention is to provide means, which will permit the convenient separation of the burner from the stove reservoir for cleaning or repairing purposes.

A further object is to provide an improved means for securing the stove chimney or stack thereon.

The invention consists generally in various constructions and combinations all as hereinafter described and particularly pointed out in the claims.

In the accompanying drawings, forming part of this specification, Figure 1 is a top view of an oil stove embodying my invention, Fig. 2 is a vertical, sectional view of the same, Fig. 3 is a detail view, illustrating a head light burner and means for supplying oil thereto.

In the drawing, 2 represents the oil reservoir having a base 3 and a top 4, wherein the burner 5 is arranged. This burner is of ordinary construction and fits within a circular opening 6 inclosed by the reservoir and has a wick 7 within an annular chamber 8, formed by the concentric inner and outer wick tubes 9 and 10. A nipple 11 is provided on the lower ends of the wick tubes communicating with the chamber between them and fitting within a sleeve 12 that is provided on the inner end of a horizontal pipe 13. The lower, threaded end of the nipple 11 depends below the sleeve 12 and is provided with a cap 14, by means of which the nipple is secured in the sleeve and the burner held in place on the base. No other securing means is provided for the burner and it is only necessary to loosen the cap 14 to allow the removal of the burner from the base for cleaning or repairs. The pipe 13 has a branch 15 extending up to the reservoir 2 and the outer end of said pipe projects through the wall of the base and has a cap 16, which is removable, which allows access to the pipe.

Whenever desired the oil may be drained off through the nipple or horizontal pipe without tilting the stove and upon removing the nuts a wire may be inserted into the horizontal pipe and into the nipple and the entire oil conducting passage thoroughly cleaned out without the necessity of removing the burner from the stove.

In Fig. 3, I have illustrated a headlight burner 20, having a nipple 21 on one side, passing through a sleeve 22, which communicates with an oil supply pipe 23. The end of the nipple projects through the sleeve and has a locking cap 24, which normally holds the parts securely together. On the top of the stove I provide a chimney or stack 25 in the form of a frustum of a cone and composed preferably of sheet metal and having loop 26 at its lower end, forming one section of a hinge on each side of the stack, the other section consisting of a leaf or plate 27 secured to the top of the stove and having loops 28, which register with loops 26. A locking device 29 is provided for each hinge, slidable in a guide 30 and adapted to enter the loops 26 and 28 and lock the stack on the stove. The locking devices are capable of being moved back and forth to lock both sides of the stack on the stove or release one side and permit the stack to swing on the hinge on the other side, or both hinges may be released to allow the stack to be removed entirely. The stack is provided with a bail 31 for convenience in carrying the stove. This arrangement of the chimney or stack and the means for attaching the same to the stove top forms the subject matter of a separate application and I make no claim to the same herein.

I do not wish to be confined in this application to the specific coupling means provided in connection with the burner and reservoir, as the device shown is capable of various modifications without departing from the spirit of my invention.

I claim as my invention:—

1. An oil stove comprising a reservoir having a central opening and a base, a burner fitting within said opening, a nipple depending from said burner, a feed pipe connected with said reservoir, a sleeve carried by said pipe and adapted to receive the threaded lower end of said nipple, said nipple projecting through said sleeve and forming an oil tight joint therewith, and a nut fitting the threaded end of said nipple and locking it in said sleeve, said nut being readily removable to allow drainage and

cleaning of said supply pipe and nipple without disturbing said burner.

2. An oil stove comprising a reservoir having a central opening and a base, space being provided within said base below said reservoir, a burner fitting within said opening, a nipple depending from said burner, a feed pipe connected with said reservoir and having one end projecting through the wall of said base and provided at that end with a removable nut, a sleeve carried by the inner end of said pipe and adapted to receive the threaded lower end of said nipple and forming an oil tight joint with said nipple, the threaded end of said nipple projecting through said sleeve and a nut fitting said threaded end and locking it in said sleeve, said last named nut being accessible through the bottom of said base, and said pipe and nipple being adapted to be drained and cleaned by the removal of said nuts without displacement of said burner.

3. A heater comprising a reservoir having a central opening and a base, a burner fitting within said opening, a nipple depending from said burner, a feed pipe connected with said reservoir, a coupling means securing said nipple and feed pipe together below said burner and near the bottom of said base, said coupling means being accessible through said base and allowing drainage and cleaning of said feed pipe and nipple without disturbing said burner.

4. A heater comprising a reservoir having a central opening and a base, a burner fitting within said opening, a nipple depending from said burner, a feed pipe connected with said reservoir and projecting through the wall of said base and having a removable closing means on its projecting end, a coupling uniting the contiguous ends of said nipple and said feed pipe and accessible through the bottom of said base, said coupling and closing means allowing the draining and cleaning of said nipple and feed pipe without displacement of said burner.

In witness whereof, I have hereunto set my hand this 1st day of December 1908.

FREDERICK CONRATH.

Witnesses:

RICHARD PAUL,

J. A. BYINGTON.