Dec. 12, 1967 D. J. FISHER 3,357,399

COMBINED FLUIDIZED BED AND INVERTED CASCADE DEVELOPMENT APPARATUS

Filed July 21, 1966

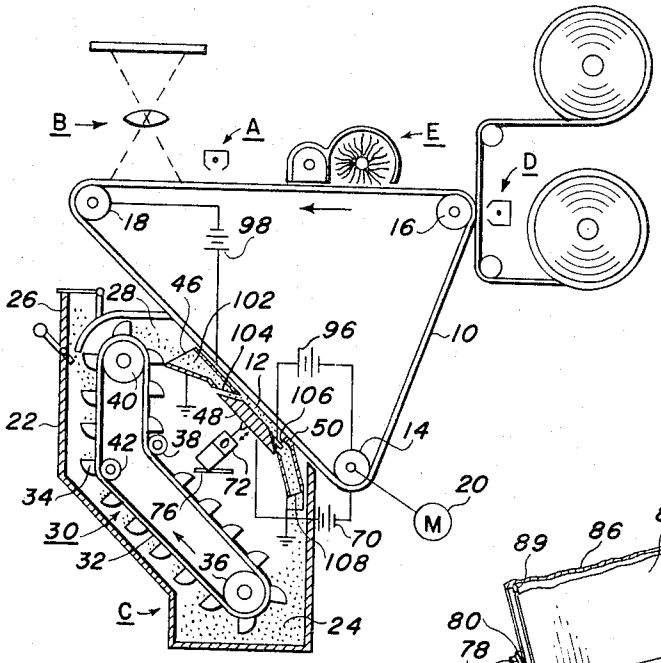

FIG. 1

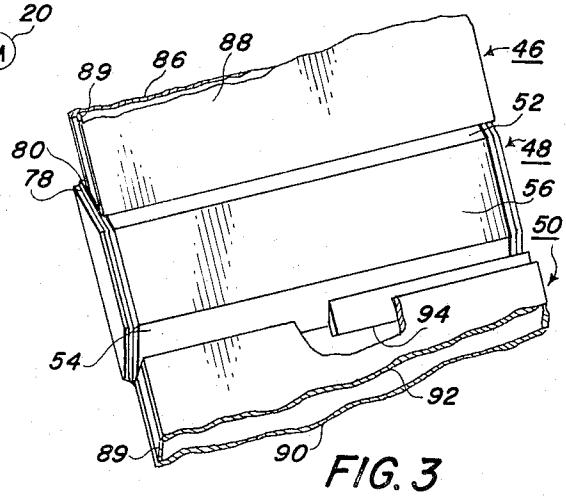

FIG. 3

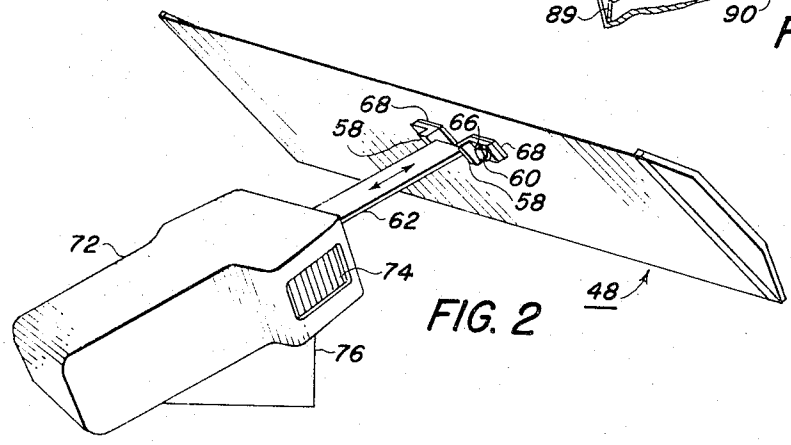

FIG. 2

INVENTOR.
DONALD J. FISHER

BY Donald J. Daley
Stanley Z. Cole
ATTORNEY

United States Patent Office 3,357,399 Patented Dec. 12, 1967

3,357,399

COMBINED FLUIDIZED BED AND INVERTED CASCADE DEVELOPMENT APPARATUS

Donald J. Fisher, Rochester, N.Y., assignor to Xerox Corporation, Rochester, N.Y., a corporation of New York

Filed July 21, 1966, Ser. No. 566,841
10 Claims. (Cl. 118—637)

This invention relates in general to developing electrostatic images, and in particular relates to apparatus for developing electrostatic images by utilizing vibrational forces to fluidize a two-component developer material under the influence of a development electrode.

In the practice of xerography, as described in U.S. Patent No. 2,297,691, to Chester F. Carlson, a xerographic surface comprising a layer of photoconductive insulating material affixed to a conductive backing is used to support electrostatic images. In the usual method of carrying out the process, the xerographic plate is electrostatically charged uniformly over its surface and then exposed to a light pattern of the image being reproduced to thereby discharge the charge in the areas where light strikes the layer. The undischarged areas of the layer thus form an electrostatic charge pattern in conformity with the configuration of the original light pattern.

The latent electrostatic image can then be developed by contacting it with a finely divided electrostatically attractable material such as a resinous powder. The powder is held in image areas by the electrostatic charges on the layer. Where the charge is greatest, the greatest amount of material is deposited; and where the charge is least, little or no material is deposited. Thus, a powder image is produced in conformity with the light image of the copy being reproduced. The powder is subsequently transferred to a sheet of paper or other surface and suitably affixed to thereby form a permanent print.

The electrostatically attractable developing material commonly used in xerography consists of a pigmented resinous powder referred to here as "toner" and a coarse granular material called "carrier." The carrier is usually coated with a material removed in the triboelectric series from the toner so that a triboelectric charge is generated between the powder and the granular carrier. Such charge causes the powder to adhere to the carrier. The carrier also provides mechanical control so that the toner can be readily handled and brought into contact with the exposed xerographic surface. The powder particles are then attracted to the electrostatic image to produce a visible powder image on the xerographic surface.

The method of xerographic development of latent electrostatic images by fluidizing a two-component developer material in a development zone is described in U.S. patent application Ser. No. 566,847 copending herewith. As described in that case, a quantity of two-component developer material is vibrated beneath a latent electrostatic image. The vibrations are so rapid that they cause the developer material to suspend itself in a fluidized mass or bed. As an image bearing xerographic surface is passed through the development zone, it is contacted by the fluidized or constantly moving developer and image areas of the xerographic surface are developed with the toner material in the developer.

The present invention constitutes new xerographic development apparatus adapted to carry out the method of fluidized bed development as described above and incorporates advantageous features over other xerographic systems.

Earlier embodiments of fluidized bed development machinery, as described for example in the aforementioned patent application had no provision for retoning carrier particles which became depleted of toner due to the toner deposition in image areas. The present invention, on the other hand, takes advantage of the inherent low friction properties of the fluidized developer material to continuously introduce freshly toned carrier particles into and out of the development zone. Due to the fluidized state of the developer in the development zone, the coefficient of friction between the developer and the tray is reduced. A slight tilt of the fluidized bed will thus result in a flowing action of the entire fluidized bed in the direction of tilt. By introducing a supply of freshly toned carrier to the high side of the tilted development zone and concurrently collecting the depleted developer as it flows past the lower part of the development zone, freshly toned carrier can be supplied to image areas. This characteristic of a fluidized bed of developer to flow is advantageous for use in xerographic machinery which requires a continuous supply of developer such as automatic machinery.

Development electrodes are commonly used in xerography to provide solid area development. The electrode consists of a grounded or biased member positioned as closely as possible to the xerographic surface to create an electric field in conjunction with the electrostatic image. Since development electrodes should be as close as possible ot the xerographic surface, it has been a continuous problem in automatic machines to provide an electrode that could be positioned close enough to the surface to create the electric field without interfering with developer flow. One approach to this problem has been to position an electrode plate or grid parallel to the xerographic surface and spaced therefrom. With such an approach, if the electrode is too distant from the xerographic surface, the effect is reduced and solid area capabilities are minimized. If, on the other hand, the electrode is too close to the xerographic surface, the developer which flows parallel to the image and electrode, is susceptible of jamming between the closely spaced electrode and xerographic surface.

The present invention overcomes the problems previously encountered in incorporating development electrodes in xerographic development systems. This is achieved by reciprocating an imperforate electrode plate toward and away from the image bearing surface. By spacing the electrode plate a proper distance from the image bearing surface, the field created thereby may be still effective for insuring solid area coverage of images. By then reciprocating the electrode plate, the passage space for the developer between the electrode plate and image bearing surface is constantly being varied which thus tends to minimize the possibility of developer jamming therebetween. The agitation caused by the reciprocation of the plate further reduces the possibility of any such jamming.

A variation of cascade development is inverted cascade as described in U.S. patent application Ser. No. 452,098, copending herewith. In inverted cascade, two-component developer is cascaded down an imperforate development electrode in closely spaced registry beneath a latent electrostatic image bearing surface. The field created between the image areas and the electrode attracts the toner particles to the charge on the image areas. The carrier cascades down the electrode out of contact with the image bearing surface during the migration of the toner to the image.

While structural similarities exist between inverted cascade and the present invention, development is achieved herein by a dissimilar manner since an electrode is employed which is in vibration to cause the toned carrier to contact the image bearing surface for toner deposition. Development is thus achieved during direct developer-image contact as in conventional cascade while under the effect of a development electrode field as in

inverted cascade for improved solid area capabilities. Due to development being caused by direct contact of the image by developer, the apparatus of the instant invention also permits a substantial shortening of the length of the development zone over the inverted cascade apparatus.

It is, therefore, an object of the present invention to develop latent electrostatic images.

It is a further object of the present invention to improve fluidized bed development of xerographic images so that solid areas can be developed with the use of an imperforate development electrode.

It is a further object of the invention to utilize the fluidized state of developer material to recirculate freshly toned carrier through the development zone.

It is a further object of the invention to minimize development zones and development time in xerographic development machinery.

These and other objects of the invention are obtained by cascading two-component developer down an imperforate development electrode plate while the plate is in the state of vibration towards and away from an image-bearing surface so that the vibrated developer will suspend itself in a fluidized mass for contacting and developing latent electrostatic images on the surface.

For a better understanding of the invention, as well as other objects and further features thereof, reference is had to the following detailed description of the invention to be read in connection with the accompanying drawings wherein:

FIG. 1 is a diagrammatic sectional view illustrating xerographic development apparatus constructed in accordance with the instant invention as applied to a machine adapted for continuous and automatic operation.

FIG. 2 is a bottom right side perspective view of the vibration imparting elements shown in the sectional view of FIGURE 1.

FIG. 3 is an upper left side perspective view of the developer vibrating plate of FIGURES 1 and 2 and also showing the developer inlet and outlet chutes.

Essentially, the apparatus of the invention as illustrated herein includes a vibratory plate positioned beneath at least a portion of a latent electrostatic image. The plate is adapted to be electrically biased or grounded and concurrently vibrated while a two-component developer is cascaded thereacross. The bias renders the plate a development electrode for improved solid area coverage. The vibrations of the plate reciprocate the developer between the image and plate to such a state that the developer becomes a tumbling fluidized mass or bed of developer material. During this time, a xerographic image-bearing surface is moved through the bed of two-component developer. As the developer particles contact the image, they are impinged against the image-bearing surface for deposition of the toner particles. Due to the constant motion of the developer particles, each incremental area of the surface is being continually contacted by different carrier beads and toner particles. The speed of agitation of the developer results in a substantial increase in the number of developer-image contacts for a given unit of time when compared with other development systems.

The constant movement of the developer material within the fluidized bed causes the individual particles to continually move into and out of contact with the image bearing surface. The transfer of the toner particles from their associated carrier beads to image areas occurs during this contact period. The deposition of toner to image areas is physically caused either by the attraction of the image exceeding the attraction of the carrier for the toner or the toner being jarred loose from the carrier by the force of contact as it strikes the xerographic surface whereupon the charge in the image areas attract the loose toner.

The developer composition may be of the conventional type as presently employed in commercial xerographic machines which use cascade techniques. Such a composition comprises carrier beads of glass or steel covered with and encased in a suitable coating, such as vinyl chloride, which imparts the necessary turboelectric properties to the toner upon contact. The toner is usually a pigmented resinous material, or the like which can be used to develop xerographic images.

Shown in the figures is xerographic apparatus embodying the present invention constructed for continuous and automatic operation. The elements of this machine are all conventional in the xerographic art with the exception of the development station which forms the basis of the present invention. For the purpose of the present disclosure, the several xerographic processing stations in the path of movement of the xerographic surface may be briefly described as follows:

A charging station A, at which a uniform electrostatic charge is deposited on the photoconductive layer of the xerographic belt;

An exposure station B, at which the light or radiation pattern of copy to be reproduced is projected onto the belt surface to dissipate the drum charge in the exposed areas thereof to thereby leave a latent electrostatic image of the copy to be reproduced;

A developing station C, which forms the basis of the present invention, at which a xerographic developing material, including toner particles having an electrostatic charge opposite to that of the electrostatic latent image, are moved into contact with the drum surface, whereby the toner particles adhere to the electrostatic latent image to form a xerographic powdered image in the configuration of the copy being reproduced:

A transfer station D, at which the xerographic powder image is electrostatically transferred from the belt surface to a transfer material or a support surface; and

A drum cleaning and discharge station E, at which the belt surface is brushed to remove residual toner particles remaining thereon after image transfer, and at which the belt surface is exposed to a relatively bright light source to effect substantially complete discharge of any residual electrostatic charge remaining thereon.

As noted above, the development station is generally designated as station C. Adjacent thereto is a xerographic surface shown for illustrative purposes as a flexible endless belt **10**, with an exterior surface adapted to have latent electrostatic images formed thereon. The belt is mounted for movement in a path adjacent the development zone **12** of the developer housing assembly. Motion of the belt is guided by rollers, three for example **14**, **16**, and **18** one of which, **14** is driven by a suitable power means **20** to move the various portions of the belt and image sequentially past the several processing stations.

As shown particularly in FIGURE 1 the development instrumentalities are contained within an enclosed developer housing **22**. In the lower portion of the developer housing is a sump **24** for containing a supply of conventional two-component developer. As toner is depleted from the supply of developer in the sump through the development of images additional toner may be added to the system by means of a conventional toner dispenser **26** which gravity drops such additional toner into the sump.

The developer is transported from the sump **24** to an elevated location **28** by means of an endless belt conveyor **30**. By bringing the developer to the elevated location it may then be gravity dropped through the development zone **12**. The belt conveyor is well known in the xerographic arts particularly cascade development systems. Briefly, the conveyor consists of an endless flexible belt **32** with elongated buckets **34** secured across the face at spaced points. A plurality of rollers, four for example, **36**, **38**, **40** and **42** positioned to guide the conveyor for movement in the direction of the arrows as shown in FIGURE 1. One of the rollers **36** for example, is driven by

any suitable power means, not shown, for moving the conveyor **30** and consequently transporting the developer to its elevated location.

As the developer is dropped by the buckets of the conveyor from its raised location, it falls through various regions of the development station. It then returns to the sump for subsequent travel on the conveyor to thus constitute a continuous cycle. Among the various regions through which the developer material falls are the input chute **46** across the top face of the vibrating electrode plate **48** adjacent the image, through the outlet chute **50** and then back to the sump **24**.

The vibrating electrode plate **48** as more clearly shown in FIGURES 2 and 3 is constructed of a light weight conductive material aluminum for example. Its width is approximately the same as the image bearing belt **10** from which it is positioned in spaced registration in the development zone. The upper surface of the electrode plate is formed of three sections, tapered lead in **52** and exit sections **54** and an intermediate flat central section **56** spanning the tapered sections. The flat central section is parallel to the back surface of the electrode plate and is provided with means for connecting the electrode plate to a motion producing instrument.

The connecting elements for the electrode plate as illustrated herein include a pair of spaced L-shaped brackets **58** secured to the back surface of the electrode plate. The brackets which are provided with apertures adjacent the plate, are centrally positioned relative to the plate to insure a central application of the motive forces upon the plate. The motor drive bar **62** is rigidly secured to the brackets slightly spaced from the electrode plate by suitable welding, bolting or the like. Bolts **60** extend through the apertures in the brackets and the back face of the electrode to complete the connection.

Insulation of the electrode plate from the drive bar is accomplished by insulating washers **66** and pads **68** between the bolt head and bracket and the bracket and the electrode plate respectively. Insulating bushings are also provided on the threads of bolt **60** to complete the insulation of the electrode plate from the drive bar. Such insulation of the electrode plate permits the application of a bias or ground to the plate relative to the drive roll by the potential source **70**. The electrode increases the image field to improve solid area coverage.

Motion to the drive bar and consequentially the electrode plate can be accomplished by any suitable motor means, mechanical or electrical, which are designed to impart a longitudinal reciprocation. As illustrated herein, the means for creating such motion is vibrator **72**, which is a commercially available Jeffrey vibrator which utilizes an electromagnetic pulse to vibrate a spring assembly **74** which spring assembly **74** then carries the drive bar **62** for reciprocatory motion in the direction of the arrow as shown in FIGURES 1 and 2. The vibrator **72** is mounted on a suitable support means **76** securely mounted on opposite walls of the developer housing. The particular vibrator as illustarted herein, produces a pure reciprocation of the drive bar **62** and electrode plate **28** without the use of tracks or the like to guide the motion. If other motor means are to be employed, guide tracks for the plate and/or drive bar may be required depending upon the nature of the motor employed.

On the opposite side edges of the electrode plate there are pads **78** of an insulating material, polyurethane foam or the like. These pads are each held to the plate by strips of an adhesive insulating nylon tape **80**. The insulating side edges act to form the electrode plate **48** into a channel for guiding developer along the upper face of the electrode plate. The fact that these elements are insulators also allows the maintenance of an electrical potential on the plate in the event that these regions would contact a conductive member during operation.

Spaced in the direction of developer flow on opposite ends of the electrode plate **48** are the developer input chute **46** and a developer outlet chute **50**. These chutes span the development zone and image bearing belt and are secured in position by suitable attachment means on opposite sides of the developer housing. The input chute is formed with an enlarged entrance orifice **102** to collect developer from the conveyor and funnel it towards the electrode plate. The exit orifice **104** is tapered in conformity with the taper on the lead in section **52** of the electrode plate. A slight spacing between the tapered sections is required to eliminate interference of these elements during movement of the electrode plate. In like manner, the developer outlet chute **50** is formed with an entrance orifice **106** adjacent the exit section **56** of the electrode plate. The exit orifice **148** of the outlet chute merely permits the flow of the developer to terminate with a gravity feed back to the sump **24**.

Inasmuch as the developer fluidization and image development take place adjacent the flat central section **56** of the electrode plate **48**, there is no need for fluidizing developer at any other location in the development system. It has thus been found beneficial to electrically bias portions of the input and output chutes to thereby suppress toner clouds which would ordinarily arise due to the tumbling of the developer down such surfaces.

To accomplish the cloud suppression, the input chute **46** is formed with a grounded lower plate **86** and a biased upper plate **88** connected by insulating sidewalls **89** of a suitable insulating material as a phenolic dielectric material or the like. The output chute **50** is formed with a grounded lower plate **90**, a grounded upper plate **92** and a biased supplemental plate **94**, interconnected by insulating side walls similar to those used in the inlet chute. The supplemental plate **94** restrains the motion of toner clouds which may seep beyond the first two mentioned plates of the inlet chute. The biases applied to the chutes by potential sources **96** and **98** are oppositely charged with respect to the toner particles of the toner clouds for collection of free toner particles and suppression of such clouds which inherently arise during a flow in such surroundings.

To operate the development apparatus of the instant invention it is first necessary to activate the various processing stations outlined above. Such activation may be done by a general cycle initiating means similar to that used in any of the known continuous and automatic xerographic machines. Such general cycle initiating means will activate all operative stations including the belt driving motor **20**, developer conveying power means **44** and the electrode vibrator **72**, in addition to initiating the biases on the input and output chutes and vibrating electrode plate.

As the images on the belt pass the development zone **12** the developer conveyor **30** is continually bringing the two-component developer into the input chute **46** for funneling developer to the flat central section of the electrode plate. The tapered lead in section **52** of the electrode plate assists in guiding the developer towards the central portion of the electrode plate. As the developer contacts the electrode plate, the continuous vibrations encountered reciprocate the developer between the electrode plate and image bearing surface. The developer is fluidized by the vibrating effect imparted thereto and as gravity forces the fluidized developer down the electrode plate, the developer has the appearance of a flowing liquid.

The bias on the vibrating electrode plate assists in strengthening the image field in solid area portions of the image. In addition to facilitating solid area coverage, the bias field lends a slight assist in removing the toner particles from their associated carrier beads in image areas. This is quite similar to the function of the electrode plate in inverted cascade devices.

As the fluidized cloud of developer flows past the flat portion of the electrode plate it passes the tapered exit section **54** of the plate **48** and tumbles down the output

chute **50**, under the influence of gravity. Once in the output chute, the developer is outside the fluidizing influence of the vibrating electrode plate. Consequently, the remainder of its fall into the sump is not in the fluidized state. The bias on the chute suppresses any toner cloud which might ordinarily arise from two-component developer being dropped adjacent an unbiased surface. Once in the sump, the developer is remixed with the other developer in the sump for subsequent recycling through the development zone. Toner may be added by the toner dispenser **26** to supplement the toner lost from the system due to image development.

While the present invention, as to its objects and advantages, has been described herein as carried out in a specific embodiment thereof, it is not desired to be limited thereby; but it is intended to cover the invention broadly within the spirit and scope of the appended claims.

What is calimed is:

1. Xerographic development apparatus for developing electrostatic images on image bearing members with a two-component developer material comprising carrier particles and an electrostatically attractable powder including,

a conductive plate member positioned beneath a portion of an electrostatic image bearing member sufficiently close thereto to affect the field of electrostatic image thereon.

guide means positioned adjacent the conductive plate and adapted to introduce a flow of two-component developer across the conductive plate member,

and means to rapidly vibrate the conductive member to effect a fluidization of two-component developer material brought above the plate by the guide means whereby the fluidized two-component developer material will be impelled into repeated contact with the image bearing member for development thereof.

2. The apparatus as set forth in claim **1** wherein the conductive member is biased to the same polarity as the image areas of the image bearing member.

3. The apparatus as set forth in claim **1** wherein the conductive member and that portion of the image bearing member thereabove are both offset with respect to the horizontal and spaced from each other throughout the area of their mutual extent to thus permit a gravity developer flow therebetween.

4. The apparatus as set forth in claim **3** and further including means to guide the conductive member for vibrations in a reciprocal path towards and away from the image bearing member.

5. Xerographic development apparatus for developing latent electrostatic images on image bearing members with a two-component developer material comprising carrier granules and an electrostatically attractable powder, including,

a development plate positioned beneath an electrostatic image bearing member and capable of flowing developer material in close proximity to the surface of the image bearing member,

a portion of the plate being electrically conductive and capable of being vibrated,

means to apply a vibrational force to the conductive portion of the plate to produce fluidization of developer material flowed across the conductive poriton,

and means to apply an electrical charge to the conductive portion of the plate to impel electrostatically attractable powder towards the image bearing surface as developer is flowed across the conductive portion to thereby effect the xerographic development of latent electrostatic images on the image bearing member.

6. The apparatus as set forth in claim **5** wherein the conductive portion of the development plate is offset with respect to the horizontal to thus permit a gravity flow of developer thereacross.

7. Xerographic development apparatus for developing latent electrostatic images on image bearing members with a two-component developer material comprising carrier granules and an electrostatically attractable powder including,

a conductive plate member positioned beneath at least a portion of an electrostatic image bearing member sufficiently close thereto to affect the field of electrostatic images thereon,

first guide means positioned adjacent one end of the conductive plate member adapted to introduce a flow of two-component developer across the conductive plate member,

second guide means positioned adjacent a second end of the conductive plate member adapted to receive developer material which has flowed beyond the conductive plate member,

and means to rapidly vibrate the conductive member to effect a fluidization of two-component developer material brought above the plate by the guide means whereby the fluidized two-component developer material will be impelled into repeated contact with the image bearing member for development thereof.

8. The apparatus as set forth in claim **7** wherein the conductive plate member, the first guide means and the second guide means are all offset with respect to the horizontal to thus permit a gravity flow of developer thereacross.

9. The apparatus as set forth in claim **8** and further including,

transport means to move the developer from an area adjacent the second guide means to an area adjacent the first guide means whereby the first guide means, the space above the conductive plate member, the second guide means and the transport means form a developer material recirculating system.

10. The apparatus as set forth in claim **9** wherein the image bearing member is formed of a closed continuous loop configuration and further including,

means to continuously move portions of the image bearing member across the conductive plate member for the continuous development of latent electrostatic image thereon.

References Cited

UNITED STATES PATENTS

3,013,890	12/1961	Bixby	118—637 XR
3,254,625	6/1966	Armstrong	118—429 XR
3,263,234	7/1966	Epstein et al.	118—637 XR

CHARLES A. WILLMUTH, *Primary Examiner.*

P. FELDMAN, *Assistant Examiner.*