A. J. EDWARDS.

ADVERTISING MACHINE.

APPLICATION FILED JUNE 20, 1919.

1,326,396.

Patented Dec. 30, 1919.

2 SHEETS—SHEET 1.

FIG. 1

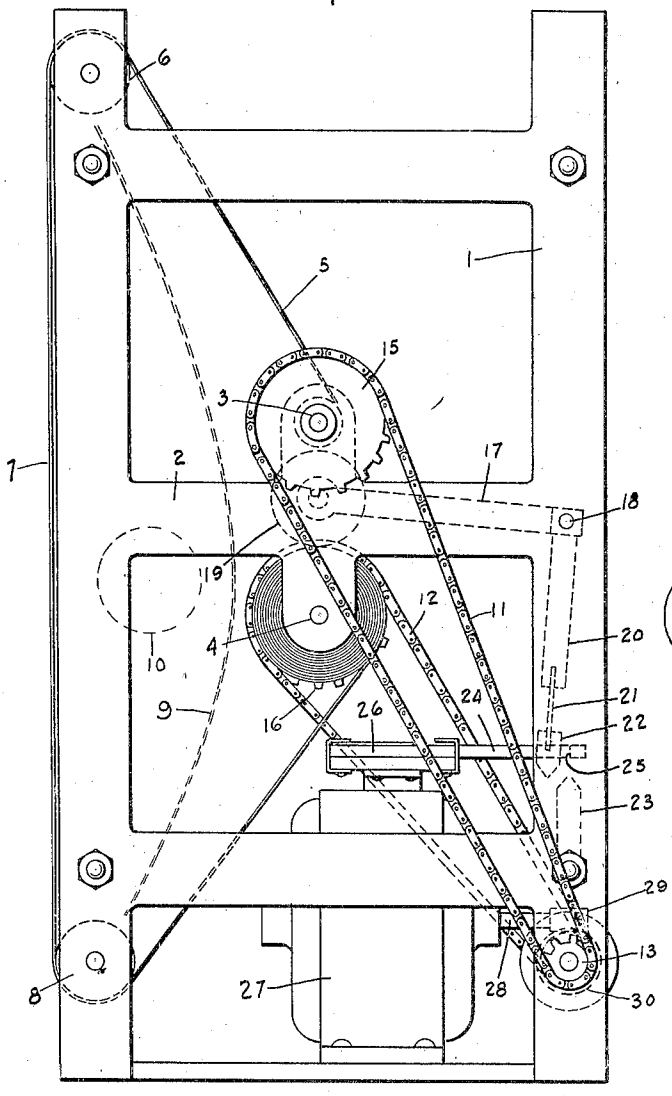

FIG. 3

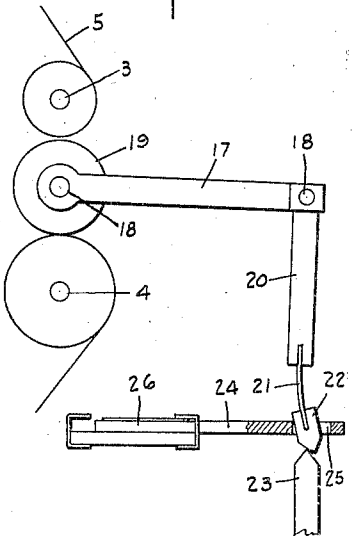

INVENTOR.

ALBERT J. EDWARDS.

BY

E. M. Bradford

ATTORNEY.

A. J. EDWARDS.

ADVERTISING MACHINE.

APPLICATION FILED JUNE 20, 1919.

1,326,396.

Patented Dec. 30, 1919.

2 SHEETS—SHEET 2.

FIG. 2

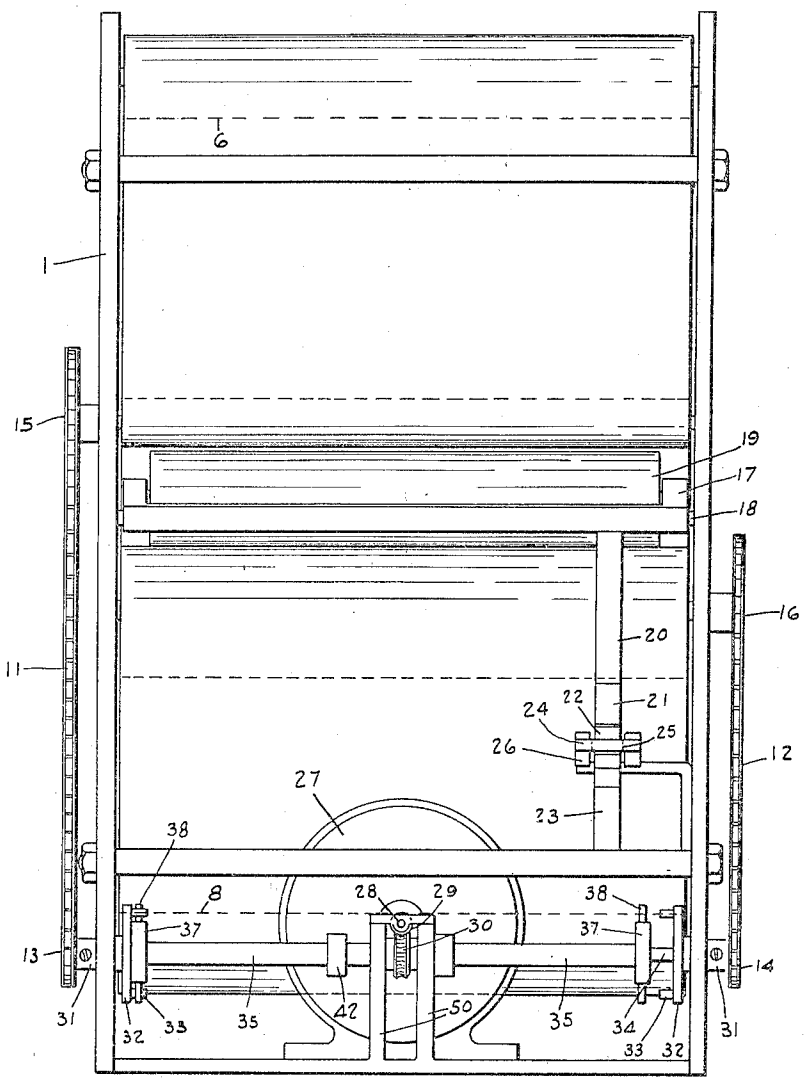

FIG. 4

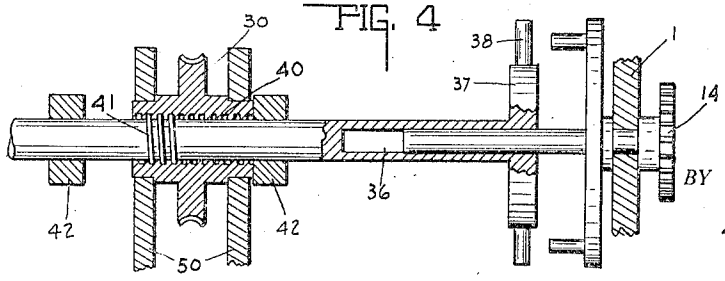

INVENTOR.
ALBERT J. EDWARDS.

BY

E. M. Bradford

ATTORNEY.

UNITED STATES PATENT OFFICE.

ALBERT J. EDWARDS, OF INDIANAPOLIS, INDIANA.

ADVERTISING-MACHINE.

1,326,396. Specification of Letters Patent. Patented Dec. 30, 1919.

Application filed June 20, 1919. Serial No. 305,605.

To all whom it may concern:

Be it known that I, ALBERT J. EDWARDS, a citizen of the United States, residing at Indianapolis, in the county of Marion and State of Indiana, have invented certain new and useful Improvements in Advertising-Machines, of which the following is a specification.

This invention relates to an advertising device of a type wherein a strip containing advertising matter on its face is caused to move slowly in front of the observer and it is among the objects of this invention to produce a device whose operation will be continuous and automatic and which is comparatively simple and easy to manufacture.

My invention includes a plurality of rolls from one of which the strip is unwound on to the other and displayed, and further includes means whereby when the first roll is substantially completely wound, the motion of the strip is reversed and it is rolled up on the other roll.

More specifically my invention comprises means operated by the movement of the advertising strip on the rolls actuating a mechanism which shifts a reversing device, thus changing the direction of rotation of the rolls and movement of the strip. Suitable mechanism is provided so that the reversal of direction of rotation of the source of power, as an electric motor, shifts a clutch member thus positively driving a roll in the opposite direction rewinding the strip on that roll.

In the accompanying drawings forming a part of the specification,

Figure 1 illustrates a vertical side elevation of the completed device;

Fig. 2 an elevation looking from the rear;

Fig. 3 is a detail showing another position of the reversing mechanism; and,

Fig. 4 a sectional detail of the clutch shifting mechanism.

The specific form of device herein illustrated is formed of a framework 1, having at an intermediate portion cross bars 2 carrying lugs, along either end of the framework, between which are journaled the rolls 3 and 4. A strip of fabric or other material 5 upon which are illustrated advertising features is attached to roll 3, drawn over roller 6 and display front 7 of the frame, passed over the roller 8 and finally to the roll 4 where it is secured. A reflector 9 and lamp 10 are placed behind the fabric at point 7 in order to illuminate the advertising at night.

The driving means 11 and 12, such as rope, chain or belt, are connected to suitable pulleys or sprockets 13 and 14 and passed over pulleys or sprockets 15 and 16 secured to rolls 3 and 4 respectively. A bar 17 pivoted at 18 carries a roller or similar device 19 interposed between the two rolls 3 and 4. Depending from the pivoted portion and rigidly attached to the bar 17 is a bar 20 which carries at its lower end a spring member 21 carrying at its lower end a knob 22 which is adapted to come in contact with and be held by contact piece 23. A lever 24 having an opening 25 forming a collar into which the knob 22 is inserted is connected to a reversing switch to reverse the direction of the motor 27.

The motor is connected by shaft 28, worm 29 and its wheel 30 to a mechanism for shifting the power for turning the rolls alternately in opposite directions. The sprockets or pulleys 13 and 14 are journaled into the framework of the device by shafts 31 and carry on the portion of their shafts within the frame, disks 32 having laterally projecting pins 33, the shafts continuing within the framework for a short distance and being of reduced diameter. A cylindrical member 35 having its ends hollowed out, as shown at 36, carries disks 37 from opposite ends of which project pins 38. The worm wheel 30 has a hollow hub within which are formed the screw threads 40 adapted to mesh with coöperating screw threads 41 formed on the central portion of the cylindrical member 35. Stops 42 are formed on member 35 on either side of the threaded portion and are adapted to engage the sides of the bearings 50 in shifting of the clutch mechanism.

The operation of the device is as follows:

Assuming that the device is running and that the roll 3 is practically unrolled, the advertising strip being now practically entirely on the roll 4. At this point the knob 22 is on the right of contact piece 23 (Fig. 3) pressing against it by reason of the roller 19 being pressed upwardly, such force being transmitted through bar 20 and spring 21. When sufficient tension has been brought on the spring 21 it bends so that the knob 22 slips past the contact piece 23 (Fig. 1) shifting the reversing switch 26 and reversing the motor 27.

As the motor starts its revolutions in the opposite direction it causes a lateral movement of the cylindrical member 35 due to the coöperating screw threads 40 and 41 until the stops 42 have been shifted in such a manner that the other of the two stops engages the bearing 50. Simultaneously the pins 38 are disengaged from one of the clutch members, say the one on the right of Fig. 2, and has become engaged with the clutch member on the left. This causes driving members 12, 14 and 16 to act as idlers while the members 11, 13 and 15 are placed in direct connection with the source of motion and thereby the roll 3 is positively actuated and in a direction opposite to that in which roll 4 was moving.

Although I have described my machine and its operation specifically, I desire that my invention be not limited to merely the specific details enumerated, but I desire to claim my invention broadly, except as limited by the following claims:

1. An advertising device comprising a plurality of rolls, an advertising strip adapted to travel from one to the other of said rolls for display, means for alternately driving said rolls in opposite directions, and means including a member interposed between the rolls to reverse the direction of motion of the said strip comprising a bar acted upon by the rolling up of the strip, a spring member connected thereto adapted to be moved past a contact piece by the motion of a bar, and a reversing device for said driving means connected to the said spring member.

2. An advertising device comprising a plurality of rolls, an advertising strip adapted to travel from one to the other of said rolls for display, means for alternately driving said rolls in opposite directions comprising a motor connected to a member having stops and including a plurality of coöperating screw threads, clutch members connected to the rolls operated by the lateral movement of said member, and means including a member interposed between the rolls to reverse the direction of motion of the said strips comprising a bar acted upon by the rolling up of the strip, a spring member connected thereto adapted to be moved past a contact piece by the motion of the bar, and a reversing device for said driving means connected to said spring member.

3. An advertising device comprising a plurality of rolls, an advertising strip adapted to travel from one to the other of said rolls for display, means for alternately driving said rolls in opposite directions, shafts for each roll in alinement, means for transmitting power from said shafts to said rolls, clutch members secured to said shafts, a cylindrical member, a power source connected to the same, said cylindrical member being interposed between the shafts and carrying pins adapted to coöperate with the clutch members, and means for laterally shifting the said cylindrical member on the reversing of direction of rotation of the power source to engage one or the other of said clutch members.

4. In an advertising device the sub-combination of direction reversing and power shifting means which comprises a motor, means connected thereto for driving a wheel having a hollow hub, screw threads formed within said hub, a cylindrical member having corresponding coöperating screw threads formed therein within said wheel, stops formed intermediate its ends on opposite sides of the threaded portion, and means formed on the ends adapted to alternately engage one or the other of the clutch members connected to the display rolls.

In witness whereof, I have hereunto set my hand and seal at Indianapolis, Indiana, this 18th day of June, A. D., nineteen hundred and nineteen.

ALBERT J. EDWARDS. [L. S.]

Witnesses:
MARTHA MARTINDALE,
H. V. BIERMAN.