T. ZIMMERMAN.

AUTOMOBILE INSTRUMENT BOARD.

APPLICATION FILED AUG. 24, 1916.

1,363,303. **Patented Dec. 28, 1920.**

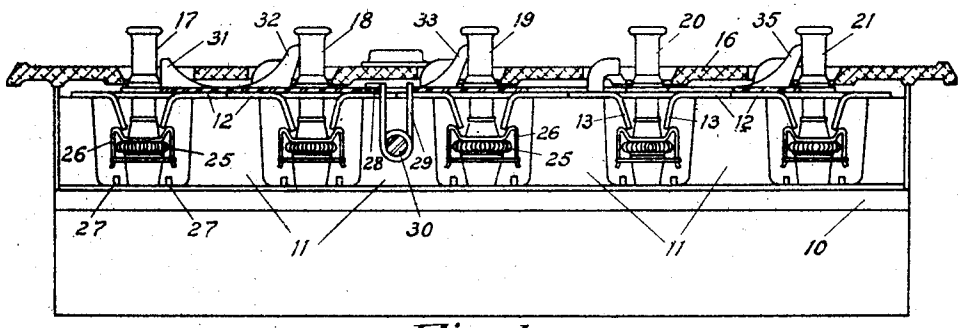

Fig. 1.

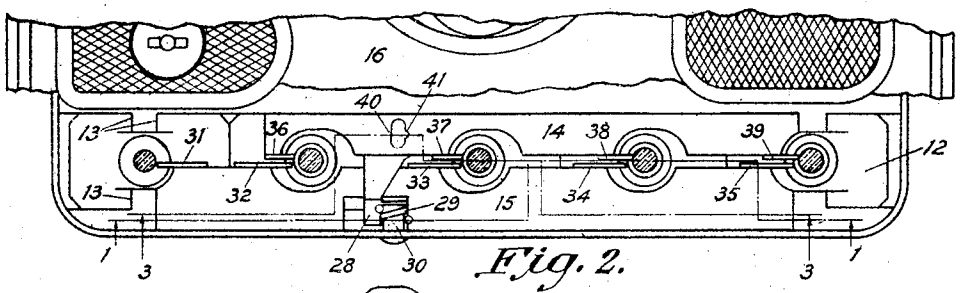

Fig. 2.

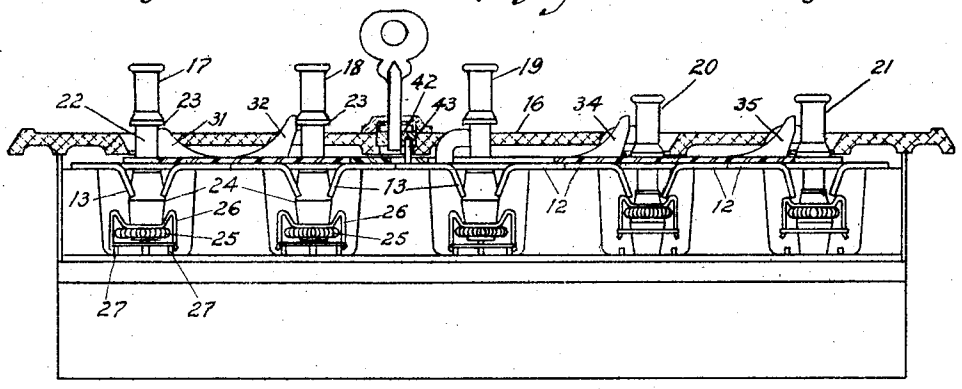

Fig. 3.

Inventor

Thomas Zimmerman.

Witnesses

David H. Sinkler.

Ralph Munden

By Raymond H. Van Kirk.

Attorney

UNITED STATES PATENT OFFICE.

THOMAS ZIMMERMAN, OF NIAGARA FALLS, NEW YORK, ASSIGNOR TO U. S. LIGHT & HEAT CORPORATION, OF NIAGARA FALLS, NEW YORK, A CORPORATION OF NEW YORK.

AUTOMOBILE INSTRUMENT-BOARD.

1,363,303. Specification of Letters Patent. Patented Dec. 28, 1920.

Application filed August 24, 1916. Serial No. 116,620.

To all whom it may concern:

Be it known that I. THOMAS ZIMMERMAN, a citizen of the United States, residing at Niagara Falls, in the county of Niagara and State of New York, have invented new and useful Improvements in Automobile Instrument-Boards, of which the following is a specification.

The present invention relates to automobile instrument boards.

In automobile lighting systems in which a generator is driven by the automobile engine to supply current to a storage battery and electric lights, a switch should be provided to control the output of the generator. When the battery shows evidences of being fully charged and much running is being done during the hours of daylight when no lights are on, said switch is operated to kill the excitation of the generator, in order that the battery may not be overcharged. If a light should be turned on, it is desirable that the generator should be operative to supply the current therefor, rather than drawing on the battery. Therefore, said switch should not be opened while a lamp is on nor should a lamp be turned on when said switch is open. Furthermore, it is desirable that the operator should be able to lock said lamps against tampering by unauthorized persons.

An object of the present invention is to provide interlocking means whereby the operation of the lights is dependent upon the generator controlling means and vice versa.

A further object is to provide locking means for said lights which locking means will coöperate with the interlocking means above referred to.

Further objects will be apparent as the description proceeds.

Referring to the drawings—

Figure 1 represents an elevation, in section, according to the present invention, said section being taken along the line 1, 1, of Fig. 2.

Fig. 2 is a plan view of the instrument board with the cover plate broken away.

Fig. 3 is an elevational view, similar to Fig. 1, the section being taken along the line 3, 3, of Fig. 2.

The body portion of the instrument board is indicated as a whole by the numeral 10. Mounted on the body portion are a plurality of studs 11, which may be circular in outline or of any other suitable configuration. The body portion 10 and studs 11 will preferably be composed of insulating material, preferably bakelite. Mounted on said studs 11 are a plurality of switch stop plates 12, 12, each provided with a set of depending fingers 13, 13, the purpose of which will be presently described. Slidably mounted above the stop plates 12, 12, are the locking plate 14 and the interlocking plate 15. A cover plate 16 is provided, covering said locking plate 14 and interlocking plate 15.

Projecting through the cover plate 16 are a number of switch members 17, 18, 19, 20 and 21. Each of the switch members is similar in construction to each of the others, so a description of one will suffice for all. Each switch member is provided with a shank 22 having a collar 23. The lower portion of each shank is formed to provide conical portions arranged with a common base, which base is indicated by the numeral 24. The dimensions of the upper conical portion of each shank may be so chosen that its upward travel may be limited by the adjacent stop plate 12.

Surrounding each shank is a coil spring 25 arranged to form a ring. This spring 25 will be of such dimensions as to snugly fit the small ends of the conical portion of the shank 17. Each spring 25 has mounted thereon a contact yoke 26 adapted under certain conditions to span contacts 27, 27. The spring 25 and yoke 26 are capable of movement in a vertical direction, being limited in the upward direction by the fingers 13, 13 and being limited in the downward direction by the contacts 27, 27. It will be clear that if a switch be open, as all the switches are in Fig. 1, and the shank of said switch be drawn outwardly, the spring 25 will be distended until the base line 24 passes therethrough, after which the spring will quickly snap the yoke 26 downwardly into contact with contacts 27, 27, riding down the lower conical portion of the shank 22. If said switch is closed and it is desired to open it, an inward movement of the shank will cause the spring 25 to be distended until the base line 24 passes therethrough, after which the spring 25 will quickly snap to its upper position, in which the yoke 26 will be stopped by the fingers 13, 13.

The configuration of the locking plate

14 and the interlocking plate 15 will be clear from the drawing. Said plates lie in parallel relation. The locking plate 14 is provided with a laterally projecting finger 28. A spring 29 acts between said finger 28 and a part of the interlocking plate 15 to urge said locking plate 14 in a left hand direction and said interlocking plate 15 in a right hand direction. Said spring 29 is shown as mounted in a stud 30, which, in turn, may be mounted in any suitable way.

The interlocking means which includes the interlocking plate 15, will now be described. The connections through which switches 17, 18, 19, 20 and 21 control their respective circuits are not illustrated, the same not being necessary for a complete understanding of the present invention. It will be sufficient to state that the switch 17 is the switch which controls the output of the generator. When said switch is closed, the generator will be operative to supply current, providing the generator is operating at sufficient speed. When said switch is open, as it should be when the battery is charged and a long stretch of daylight running is being done, the generator will be inoperative, thus saving the battery from overcharge and saving an unnecessary drag on the engine. Said switch may be referred to as the touring switch. Switches 18, 19, 20 and 21 may control the various lighting circuits of the automobile, as for instance, the head lights, side lights and tail light, or any any other desired circuits. The interlocking plate 15 is provided with a plurality of upstanding fingers 31, 32, 33, 34 and 35, bent up from the side of said plate 15. As illustrated in the drawing, finger 31 is adapted to engage the right hand side of the shank of switch 17, whereas fingers 32, 33, 34 and 35 are adapted to engage the left hand sides of the shanks of switches 18, 19, 20 and 21 respectively. It will be noted that each of the collars 23 on the switches 17–21 is beveled on its upper side, the beveled portion merging into the shank of the switch. It will be clear that if the shanks of switches 18, 19, 20 and 21 are in their down positions, so that said switches are open, said switches will be prevented from closure if the switch 17 is open, as illustrated in Fig. 1. If the shank of switch 17 be drawn upwardly, thus closing said switch, the collar 23 will be removed from engagement with the finger 31 of the interlocking plate 15. Any of the switches 18–21 may now be operated, the locking plate 14 being presumed to be in inoperative position. That is to say, the touring switch 17 being closed, any of the lamps may be turned on or off, at will. As illustrated in Fig. 3, switches 18 and 19 are closed, while switches 20 and 21 are open. As long as any one of switches 18, 19, 20 or 21 is closed, its collar 23 will hold the interlocking plate 15 to the left, whereby the finger 31 will project under the collar 23 of the switch 17, preventing the operation of said switch. Therefore, the touring switch 17 may not be opened when any of the lamps are on. After all the lamp switches have been opened, however, the shanks of switches 18, 19, 20 and 21 will be in their inner positions and the interlocking plate 15 will be thrust to its right hand position by the spring 29 freeing the finger 31 from the collar 23 of the switch 17, whereby the operator may operate said switch 17 as he desires.

In the above discussion, the locking plate 14 has been presumed to be in inoperative position. Said locking plate 14 is provided with upstanding fingers 36, 37, 38 and 39 adapted to engage the left hand sides of the shanks of switches 18, 19, 20 and 21 respectively. Said locking plate is urged in the left hand direction, as represented in the drawing, by the spring 29. When said locking plate is in its right hand position, the fingers 36, 37, 38 and 39 will lock the switches 18, 19, 20 and 21 respectively in either open or closed position, depending upon where said switches have been placed prior to the movement of the locking plate 14 to the right. Said locking plate is provided with a slot 40, which has communicating therewith a notch 41. Mounted in the cover plate 16, above the location of said slot 40, is a lock cylinder 42. Said cylinder may be rotated by means of any suitable key. Said key should be arranged so that it may be withdrawn from the cylinder only when said cylinder is in one of two angular positions at 180 degrees from one another. Said cylinder 42 is provided with a locking pin 43, adapted to ride in the slot 40 in the locking plate 14. When the cylinder 42 is turned so that the pin 43 is in its extreme right hand position, which is one of the positions at which the key may be withdrawn, said pin will be located in the notch 41, and the locking plate 14 will be held against the tension of the spring 29 in its right hand position. This is the locking or operative position of the locking plate. When the operator desires to unlock the lamp switches, he will insert the key and turn the cylinder 42. The locking plate will be urged slightly in the right hand direction to permit the pin 43 to pass the notch 41. The spring 29 will now urge the locking plate to the left as far as permitted by the pin 43. The operator will turn the cylinder until the pin snaps into the notch 41, and may then withdraw the key. The locking plate 14 will now be held in unlocking or inoperative position. It has not been considered necessary to illustrate the locking plate 14 with a finger locking the touring switch 17, as in practice no locking

means for said switch will ordinarily be considered desirable. Opening and closing of the touring switch when the automobile is at a standstill, will be of no consequence.

In describing the present invention, it has been necessary to refer to specific features of the invention in order that the description may be sufficiently definite to be readily understood. The specific details have been chosen for convenience. Many modifications will occur to those skilled in the art. It is desired in this case to cover all such modifications that fall within the scope of the invention as defined by the appended claims.

What I claim as new and desire to secure by Letters Patent of the United States, is—

1. In combination, a touring switch, and translation device switches, and interlocking means coöperating with said switches to prevent the closure of any of said translation device switches when said touring switch is open.

2. In combination, a switch, other switches, and interlocking means coöperating with said switches, said interlocking means being provided with a plurality of switch engaging means, biasing means normally urging certain of said engaging means into engagement with said other switches, any of said other switches being adapted, under certain circumstances, to move one of said engaging means into locking engagement with said first mentioned switch.

3. In combination, a switch, other switches, interlocking means coöperating with said switches, said interlocking means being provided with a plurality of switch engaging means, biasing means normally urging certain of said engaging means into engagement with said other switches, said first mentioned switch when in open position being adapted to hold certain of said engaging means in locking engagement with said other switches.

4. In combination, a switch, other switches, interlocking means governing said switches, locking means governing certain of said switches, and common biasing means coöperating with said interlocking means and said locking means.

5. In combination, a switch, other switches, an interlocking plate provided with fingers adapted to engage said switches to prevent the closure of said other switches when said first mentioned switch is open, a locking plate adapted to lock said other switches in certain desired positions, and common spring means coöperating with said two plates.

6. In combination, a switch, other switches, interlocking means adapted to engage said switches to prevent the closure of any of said other switches when said first mentioned switch is open, locking means adapted to lock said other switches in certain desired positions, and common biasing means coöperating with said interlocking means and said locking means.

7. In combination, a switch, other switches, an interlocking plate provided with fingers adapted to engage said switches to prevent the opening of said first mentioned switch when any of said other switches is closed, a locking plate adapted to lock said other switches in certain desired positions, and common spring means coöperating with said two plates.

8. In combination, a switch, other switches, interlocking means adapted to engage said switches to prevent the opening of said first mentioned switch when any of said other switches is closed, locking means adapted to lock said other switches in certain desired positions, and common biasing means coöperating with said interlocking means and said locking means.

In witness whereof, I have hereunto subscribed my name.

THOMAS ZIMMERMAN.