United States Patent [19]

Weber

[11] **3,802,452**

[45] **Apr. 9, 1974**

[54] **COLLAPSIBLE UMBRELLA**

[75] Inventor: **Heinz Weber,** Durerweg, Germany

[73] Assignee: **Telesco Brophey Limited,** Montreal, Quebec, Canada

[22] Filed: **Aug. 7, 1972**

[21] Appl. No.: **278,499**

[52] **U.S. Cl.** **135/25**

[51] **Int. Cl.** **A45b 19/08**

[58] **Field of Search** 135/20–31

[56] **References Cited**

UNITED STATES PATENTS

3,705,593 12/1972 Weber 135/25

2,711,182 6/1955 Kiel et al. 135/25

Primary Examiner—J. Karl Bell

Attorney, Agent, or Firm—Alan Swabey; Robert E. Mitchell

[57] **ABSTRACT**

A three-stage umbrella including a dome rib of three telescopic sections in the stick of three telescopic tube sections including a quadrilateral support structure for the dome rib wherein the auxiliary link forming the quadrilateral is a tension spring.

4 Claims, 5 Drawing Figures

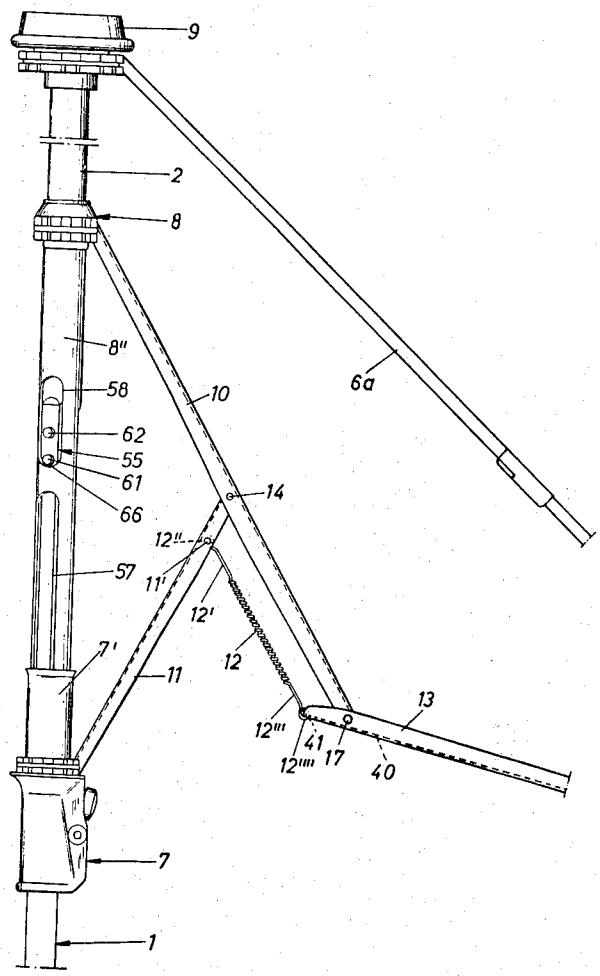

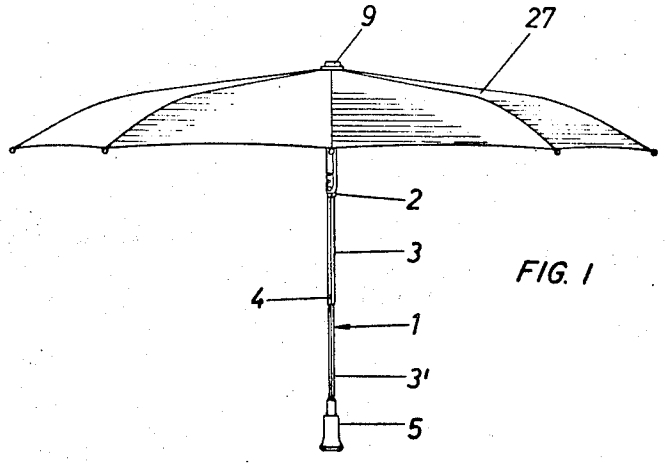

FIG. 1

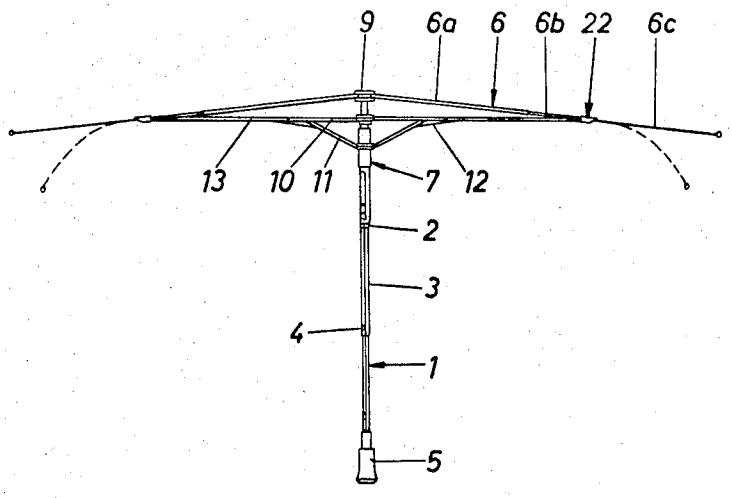

FIG. 2

FIG. 3

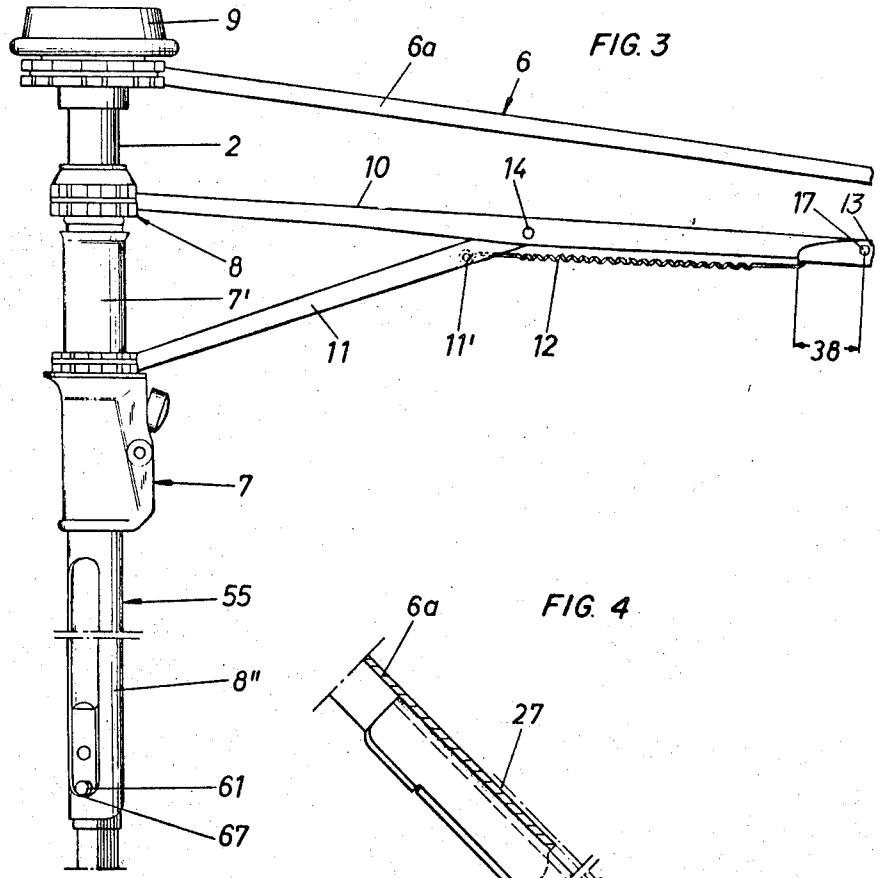
9
6a
6
2
10
14
17
13
8
7'
11
11'
12
38
7
55
8"
61
67

FIG. 4

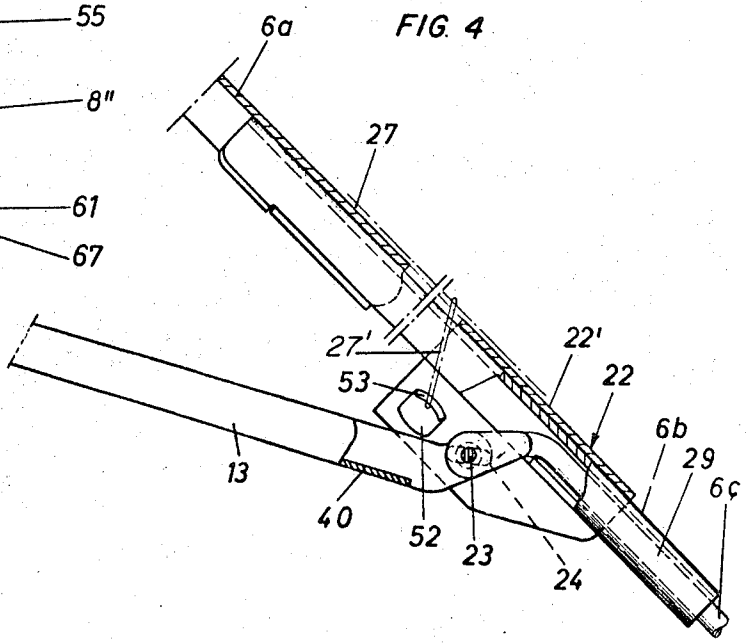
6a
27
27'
22'
53
22
6b
29
6c
13
40
52
23
24

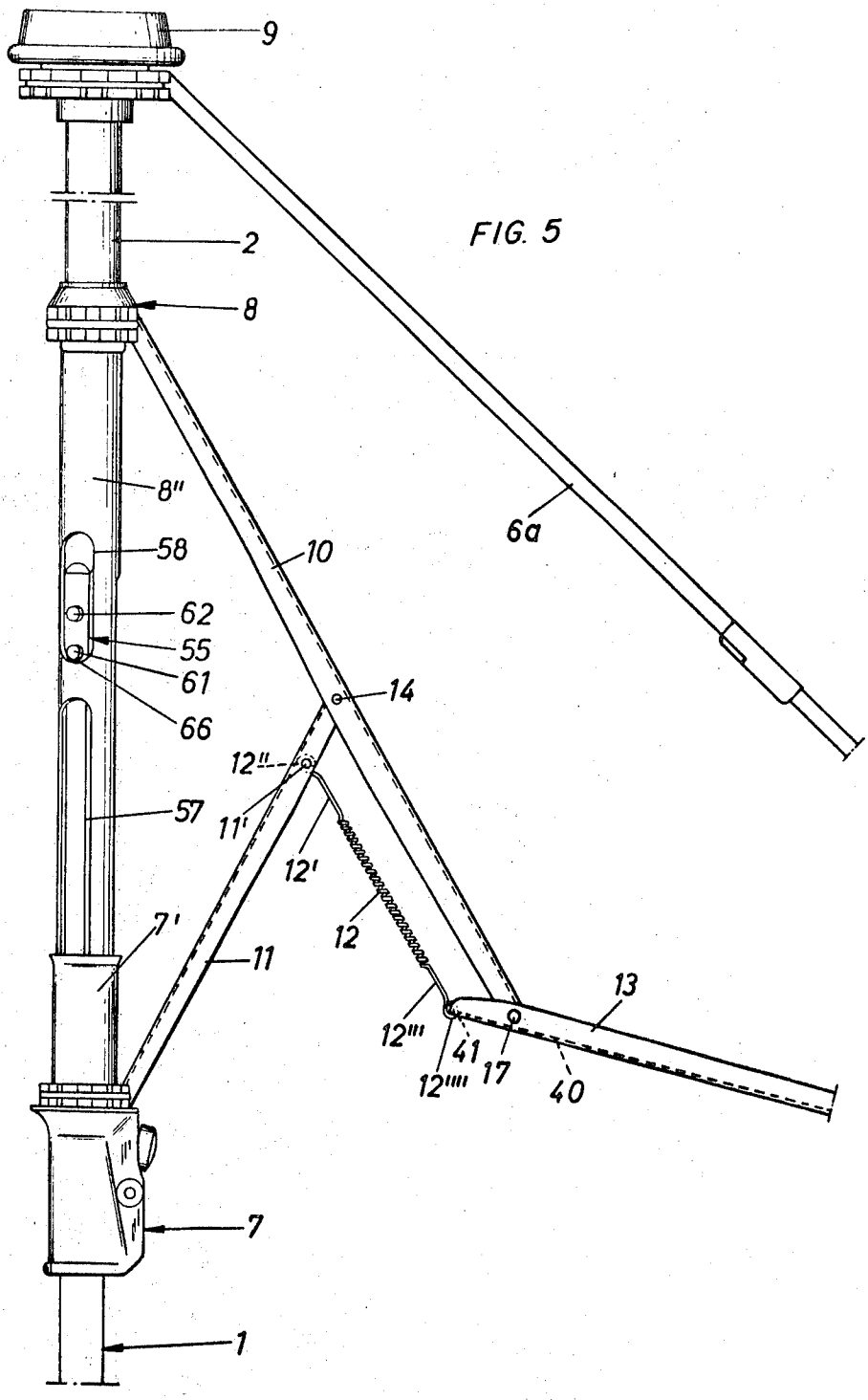

FIG. 5

COLLAPSIBLE UMBRELLA

BACKGROUND OF INVENTION

1. Field of the Invention

The present invention relates to an umbrella and particularly to an umbrella of a telescopic type in which the dome ribs have three telescoping sections.

2. Description of the Prior Art

As described in applicant's co-pending application (U.S. application Ser. No. 035,184, Filed May 6, 1970, issued as U.S. Pat. No. 3,699,988 on 24 Oct. 1972 and improvement over applicant's copending application Ser. No. 112,916 issued as U.S. Pat. 3,705,593 on Dec. 12, 1972. there is described an umbrella having a stick made up of three telescoping sections and dome ribs also made up of three telescoping sections. A main runner and an auxiliary runner slide on the stick while a support structure including an articulated stretcher member having one section hinged to the auxiliary runner and the other section hinged to the dome ribs, is provided with a strut hinged to the stretcher member at one end and to the main runner at the other end. Finally a rigid link is provided between the strut member and the stretcher member section hinged to the dome ribs perform a quadrilateral structure between the stretcher members, the strut member and the link member.

SUMMARY OF THE INVENTION

It is an aim of the present invention to provide a so-called three-stage umbrella as described above which has an improved construction in that when the umbrella is being opened the support structure functions more easily and is less apt to be jammed.

A construction in accordance with the present invention includes an umbrella frame having a stick including three telescopic sections, a crown at one end of the stick and a handle at the other end, and dome ribs hinged to the crown. The dome ribs have three telescopic sections with the outer section being connected to a sliding geats which rides over the intermediate section of the dome ribs. An articulated stretcher member is provided including an inner and an outer section with the inner section is hinged to an auxiliary runner sliding on the stick and the outer stretcher section is hinged to the connection of the geats with the outer dome rib section and a strut member hinged to the inner stretcher section and to a main runner sliding on the telescopic stick. A tension spring is hinged to the strut member at a location spaced from the hinge point of the strut member with the inner stretcher section, and the tension spring is connected at its other end to a projection of the outer stretcher section beyond its articulated hinge point with the inner stretcher section.

A result of such a construction is to provide additional stability to the support structure of a three-stage umbrella. The auxiliary link in the form of a tension spring still co-operates with the umbrella canopy to ensure that the stretcher member assumes an extended straight line position when the umbrella is open. Such a tension spring also has the advantage that if the wind causes the umbrella to be blown inside out the spring yields and thus prevents the support structure from being bent out of shape. Another function of the tension spring auxiliary link is to assist in the initial spreading of the dome ribs when it is required to open the umbrella from a collapsed position since when the umbrella is closed the spring is extended and under tension. The tension in the spring reaches its maximum at the end of the umbrella-opening phase. At the start of the closing phase of the umbrella the spring which is also under tension assists in the closing of the umbrella. The spring is at its minimum tension condition when the umbrella is half-way between open and closed position.

BRIEF DESCRIPTION OF THE DRAWINGS

The invention will now be described with reference to the accompanying drawings which show a preferred form of the device.

FIG. **1** is an elevational view of a fully open three-stage umbrella;

FIG. **2** is a schematic elevation of the umbrella frame in its fully open position;

FIG. **3** is an enlarged fragmentary view of a detail of the umbrella in its fully open position;

FIG. **4** is a further enlarged fragmentary partly cross-sectional view of a further detail of the umbrella;

FIG. **5** is a view similar to FIG. **3** showing the various parts of the umbrella in a different operative position.

DESCRIPTION OF THE PREFERRED EMBODIMENTS

Referring now to the drawings the umbrella is shown having a telescopic stick **1** comprising tubular sections **2, 3,** and **3'** with section **3'** having the smallest cross-section. A handle **5** is mounted at the end of the stick section **3'**. A crown and cap **9** is provided at the other end of the umbrella stick **1** and dome ribs **6** are hinged to the crown. Each of the dome ribs **6** includes an inner section **6a** of U-shaped construction and an intermediate section **6b** which slides within the inner section **6a** and which is of similar U-shaped cross-section, while an outer section **6c** which slides within the intermediate section **6b** is of round steel wire cross-section.

A main runner **7** and auxiliary runner **8** slide on the umbrella stick **1.**

Each dome rib **6** has a separate support structure comprising an articulated structure including stretcher sections **10** and **13** hinged together at a hinge pin **17.** The stretcher section **10** is hinged to the auxiliary runner **8** while the stretcher section **13** is hinged to the hinge pin **23** in the geats **22.** Outer dome rib section **6c** is also connected to the hinge pin **23** as can be seen in FIGS. **4** and the stretcher section **13** includes the portion **38** (FIG. **3**) extending beyond the hinge pin **17.**

A strut **11** is hinged to the main runner **7** and to a hinge pin **14** straddling the stretcher section **10** of U-shaped cross-section. The strut **11** and the stretcher section **13** are also of U-shaped cross-section and when folded the parts nest one within the other.

A tension spring **12** has a straight section **12'** formed into an eye **12''** which is hooked to a pin **11'** in the strut **11.** The other end of the tension spring **12** includes a straight section **12'''** formed into a hook and eye **12''''** which engages an aperture **41** in the web **40** at the end of the projection of stretcher section **13.**

As the umbrella is being opened, the tension spring **12** causes the stretcher section **13** to pivot clockwise and the tension in the spring **12** is reduced until it passes the position shown in FIG. **5** whereby the angle between the strut **11** and the strut section **10** between

hinge pins **14** and **17** is increased thereby causing the stretcher section to become extended and thus the tension to be increased in the spring **12.** The opening of an umbrella is also assisted by the arresting device **55.** Briefly, this device includes an extended sleeve **8''** on the auxiliary runner **8** which has a lower slot **57** and an upper slot **58.** A spring loaded pin **61** is mounted in the umbrella stick and engages the edge **66** of the slot **58.** This arresting action is maintained until the release sleeve **7'** of the main runner **7** passes over the projection **62** and moves it together with the pin **61,** which is shorter, against the action of the spring away from the edge **66** whereupon the auxiliary runner **8** and main runner **7** reach a position shown in FIG. **3,** that is, a position where the umbrella is open and the edge **67** of lower slot **57** engages the pin **61.**

The hinge pin **23** connecting the outer dome rib section **6***c* and the outer stretcher section **13** rides in a oblique slot **24** provided in the geats **22.** As the umbrella is being opened the dome rib sections are being spread and telescopically extended while the canopy **27** attached by a thread **27'** passing through the eye **52** beneath a plate portion **53** and exerts tension on the geats **22** drawing it towards the crown of the umbrella relative to the dome rib **6** thereby moving it downwardly so that the web **22'** of the geats **22** presses against the upper edge of the dome rib **6.**

I claim:

1. In an umbrella having a telescopic stick;

a crown at one end of the stick;

dome ribs hinged to the crown, each dome rib having three telescopic portions;

a support structure for supporting the respective dome ribs when the umbrella is erected and telescoping the ribs when the umbrella is collapsed;

a main runner slidable on the stick;

an auxiliary runner slidable on the stick between the main runner and the crown;

said support structure for the respective dome ribs comprising an articulated stretcher member comprising parts hinged to each other at inner ends,

one of said parts being terminally hinged to said auxiliary runner and the other of said parts being terminally hinged to the dome rib;

a strut member terminally hinged to the main runner and intermediately of the one stretcher part hinged to the auxiliary runner;

the improvement comprising a longitudinally-deformable coil spring hinged to the strut beneath its hinged connection intermediately of said one stretcher member part,

said other stretcher member part hinged to the dome rib having a projection portion extending beyond the hinged connection between the stretcher member parts and disposable beneath said one part,

said longitudinally-deformable coil spring being hingedly connected to said projection portion and forming therewith a quadrilateral arrangement between said strut member,

stretcher member parts, and said projection portion,

said longitudinally-deformable tension spring being tensioned during erection and complete collapse of the umbrella for storing energy for assisting in both erecting and collapsing the umbrella.

2. The structure as claimed in claim **1** in which said longitudinally-deformable coil spring has terminal connection portions pivoted at opposite ends to the strut member and the projection portion of the other stretcher member part.

3. The structure as claimed in claim **2** in which said connection portions include terminal eyes respectively connected to the strut member and said one stretcher member part.

4. The structure as claimed in claim **2** in which said stretcher member parts are longitudinally alignable when the umbrella is erected and the projection portion of said other stretcher member part underlies the one part of the stretcher member while the tension spring underlies in tensioned relation beneath the longitudinally aligned stretcher member parts, said stretcher member parts being foldable toward each other when the umbrella is collapsed.

* * * * *