No. 727,069. PATENTED MAY 5, 1903.

C. BOMEISLER.

ATOMIZER.

APPLICATION FILED FEB. 24, 1903.

NO MODEL.

Fig. 1.

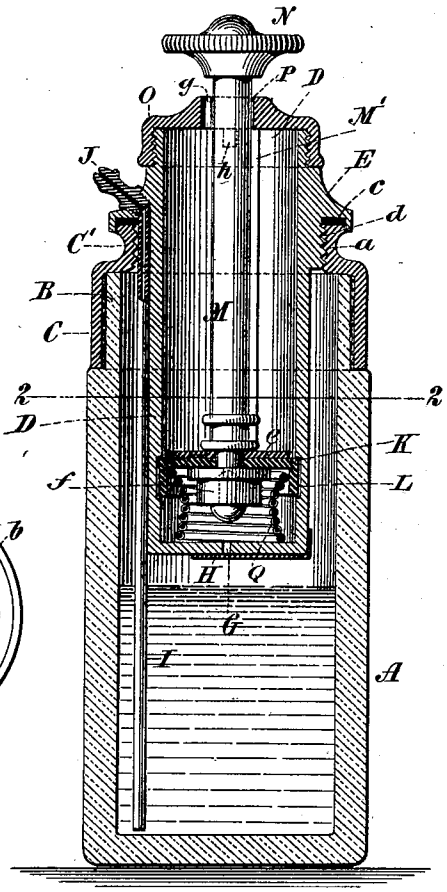

Fig. 4.

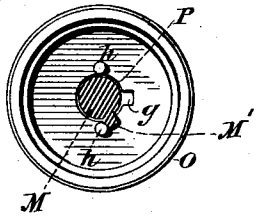

Fig. 3.

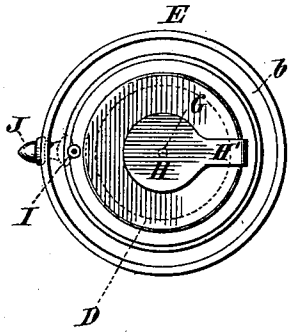

Fig. 5.

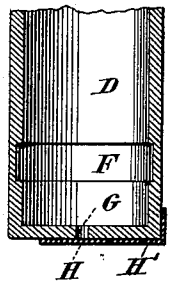

Fig. 2.

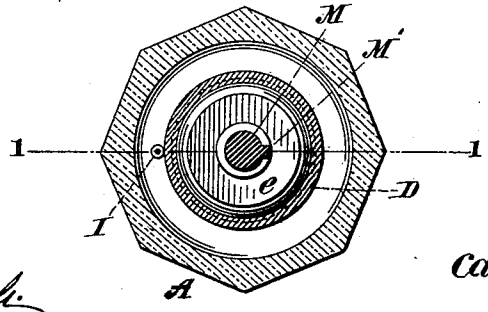

WITNESSES:

Gustave Dieterich.

Edwin H. Dietrich.

INVENTOR

Carl Bomeisler

BY

Conrad Augustus Walter & Co

his ATTORNEY

THE NORRIS PETERS CO., PHOTO-LITHO., WASHINGTON, D. C.

No. 727,069. Patented May 5, 1903.

UNITED STATES PATENT OFFICE.

CARL BOMEISLER, OF NEW YORK, N. Y.

ATOMIZER.

SPECIFICATION forming part of Letters Patent No. 727,069, dated May 5, 1903.

Application filed February 24, 1903. Serial No. 144,663. (No model.)

To all whom it may concern:

Be it known that I, CARL BOMEISLER, a citizen of the United States, residing at the city of New York, borough of Manhattan, in the county and State of New York, have invented certain new and useful Improvements in Atomizers, of which the following is a full, clear, and exact specification.

My invention relates to improvements in spraying apparatus, and more particularly to that class wherein the liquid is forced from its receptacle by means of a cylinder-pump; and the object of this invention is to provide a neat, simple, and inexpensive atomizer composed of few parts, which are easy to assemble and not liable to get out of order in the course of operation.

Up to the present time atomizers incorporating in their construction a pump, as above mentioned, have proven unsatisfactory owing to the imperfect working of the pistons and valves therein. A solid metal piston without packing has been found wholly unsuited for the purpose, since it does not prevent the escape of air between its edge and the inner wall of the pump-cylinder. The piston packed with a rubber washer or gasket is unreliable and soon wears out, and frequently the rubber is affected by contact with the fluid to be sprayed or the vapors arising therefrom, and thus rendered unfit for use, and finally pistons provided with leather packings in the customary manner have proven unsatisfactory, owing to the fact that in apparatus of this kind which are designed for occasional use only and then for short periods at a time the leather packings dry out and shrink up, and consequently render the pump inoperative until the same have been again soaked and worked into condition. To correct these defects and to attain the ends hereinabove set forth is the object of my invention, which consists in the novel details of construction and in the combination and arrangement of parts hereinafter more fully described and then pointed out in the claims.

In the accompanying drawings, forming part of this specification, wherein like letters of reference indicate like parts, Figure 1 is a central vertical section taken in the line 1 1 of Fig. 2, illustrating an atomizer constructed according to and embodying my invention. Fig. 2 is a section taken on the line 2 2 of Fig. 1. Fig. 3 is an inverted bottom view of the pump. Fig. 4 is a similar view of the cap for inclosing the upper end of the pump-cylinder; and Fig. 5 is a detail section of the lower portion of the cylinder, showing the annular groove therein and the valve arranged at the bottom of the cylinder.

In said drawings, A designates a fluid-receptacle, which may be of glass or other material and of any desirable size and shape and provided at its top with a neck or reduced portion B, upon which is cemented or otherwise secured a sleeve C, having a reduced top C′, provided upon its inner surface with screw-threads *a*.

D denotes a pump-cylinder provided near its upper end with a projecting flange E, provided upon its under side with an annular recess *b*, in which is disposed a gasket or packing *c*, adapted to contact with the edge of the reduced top C′, and upon the outer surface of said cylinder, below the flange E, are screw-threads *d*, adapted to engage the threads *a* of the sleeve C′, whereby to support the cylinder D duly within the receptacle A and at the same time perfectly seal the open upper end thereof.

Upon the inner surface of the cylinder D, near its lower end, is provided an annular groove or recess F, and in the bottom of said cylinder is a port G, provided with a valve H, made of very thin non-corrosive metal, having an integral tongue H′, which is secured at its end to the cylinder D, whereby to maintain said valve normally spring-pressed against the under side of bottom of the cylinder D to seal the port G therein.

I denotes a delivery-tube secured to the outer surface of the cylinder D, having its lower end extending downwardly into the receptacle A and the fluid therein and its upper end extending into the flange E, where it is connected to the spraying-nozzle J.

Within the cylinder D is arranged a piston K, consisting of a disk or disks of leather L, cupped, as shown, and secured upon the end of a rod M intermediate the metal washer *e* and head *f*, the said rod M being further provided with a spline M′, which extends almost

to the upper end thereof, and N denotes a button or knob secured upon the upper projecting end of said rod M.

The piston K and rod M are maintained duly in position within the cylinder D by a cap O, which may be screwed upon or otherwise secured to the open upper end of the cylinder, said cap being provided with a central aperture P, having a recess *g* opening into the same, and *h h* denote studs depending from the under side of said cap to each side of the recess *g*, which are adapted to contact with the sides of the spline M′ to limit the rotary movement of said rod and piston when the same are depressed within the cylinder when not in use.

Q denotes a coil-spring interposed between the bottom of the cylinder D and the under side of the piston disk or disks L, whereby to maintain the edge or side thereof expanded into the recess F in the cylinder when the piston is secured in its depressed position and to elevate the piston after each depression when the atomizer is in operation.

The operation of the atomizer is as follows: Assuming the apparatus to be in the position shown at Fig. 1, with the piston secured in its depressed position within the cylinder, it simply becomes necessary to partially rotate the rod M by means of the knob N until the spline M′ thereof is brought into register with the recess *g* in the cap O, whereupon said rod M and piston K will at once be projected upwardly by the action of the spring Q, and in so doing a partial vacuum will be caused in the lower part of the cylinder below the piston K, and in consequence thereof the air at atmospheric pressure in the upper portion of the cylinder above the piston will be forced between the edge of the leather disk L and the inner wall of the cylinder into the lower part of said cylinder, and with the depression of piston the air in said lower portion of the cylinder will be compressed and forced through the port G and past the valve H into the receptacle A above the fluid therein and cause the fluid to rise in the delivery-tube I and issue from the spraying-nozzle J. By continuing the operation above described the air will be compressed within the receptacle and the fluid caused to issue from the nozzle J in the form of a continuous spray.

It is to be noted that in the operation above described the piston K, owing to the peculiar construction of the disk L, acts also as a valve, which permits the air drawn into the cylinder through the aperture P and recess *g* when the piston and rod are depressed to pass by its edge during its upward movement and be compressed with the next depression of the rod and piston and the escape of air in the course of this second depression prevented by the action of the disk L in having its edge pressed against the inner wall of the cylinder and by the valve H in being pressed against its seat upon the valve-port G, the closure of the valve Q being rendered more perfect and effective by reason of its becoming moistened by the fluid within the receptacle.

It will of course be understood that I do not wish to limit myself to the location of the recess F within the cylinder, as the same may be arranged at any desired point therein, and by simply modifying or rearranging the locking device the same may be caused to hold the disk L expanded into the recess.

Without limiting myself to the details of construction, which may be varied within the scope of the invention, what I claim, and desire to secure by Letters Patent, is—

1. An atomizer comprising a receptacle, a delivery-tub, a cylinder adapted for securement within said receptacle, having air-ports therein, a recess in the inner surface of said cylinder, a piston arranged within said cylinder, and means for maintaining said piston in position therein and fill said recess, substantially as specified.

2. An atomizer comprising a receptacle, a delivery-tube, a cylinder adapted for securement within said receptacle, having air-ports therein, an annular recess in the inner surface of said cylinder, an expansive piston arranged within said cylinder, and means for expanding said piston into said annular recess, substantially as specified.

3. An atomizer comprising a receptacle, a delivery-tube, a cylinder adapted for securement within said receptacle and seal said receptacle, an air-inlet, and a valved air-outlet in said cylinder, an annular recess in the inner surface of said cylinder, an expansive piston arranged in said cylinder, a rod therefor extending through the top of said cylinder, and means for holding said piston locked within said cylinder and expanded into the annular recess therein, substantially as specified.

4. An atomizer comprising a receptacle, an opening therein, a cylinder having a delivery-tube adapted for securement within said receptacle and seal the opening therein, an inlet-port, and a valved outlet-port in said cylinder, an annular recess in the inner wall of said cylinder adjacent to one end thereof, a piston having a rod extending through the upper end of said cylinder, an expansive packing carried by said piston, and means for securing said piston in position within said cylinder, and the packing expanded into the recess therein, substantially as specified.

5. An atomizer comprising a receptacle, an opening therein, a cylinder having a delivery-tube secured thereto, adapted for securement in and seal said opening, an inlet at the upper end of said cylinder, a valved outlet at its lower end, and an annular recess in its inner wall adjacent to its lower end, a piston in said cylinder having an expansive packing, a rod extending upwardly therefrom and through the top of said casing, a spring interposed between the lower surface of said

piston and the bottom of said cylinder adapted to bear against and expand said expansive packing, and a locking device for securing said piston in position within said cylinder opposite the recess and the packing expanded therein, substantially as specified.

6. An atomizer comprising a receptacle, an opening therein, a cylinder provided with a delivery-tube and nozzle, and a flange adapted for securement intermediate its ends within said receptacle and seal the opening therein, an annular recess in the inner surface of said cylinder adjacent to its base, a cap for closing the upper end of said cylinder having an aperture and recess therein, an outlet-port in the base of said cylinder, a valve therefor, a piston in said cylinder having a yielding packing turned over at its edge, a rod extending upwardly therefrom and through the aperture in the cap, a head at its upper end, a spline arranged upon the side of said rod extending almost to its upper end, stops arranged upon the under side of said cap adapted to contact with said spline to limit its rotary movement, and a spring disposed in said cylinder intermediate its bottom and the piston, substantially as specified.

Signed at the city of New York, in the county and State of New York, this 21st day of February, 1903.

CARL BOMEISLER.

Witnesses:

C. AUGUSTUS DIETERICH,

JOSEPH G. QUINN, Jr.