# W. J. Horner.

## Scraper.

No. 70,719. Patented Nov. 12, 1867.

Fig. 1.

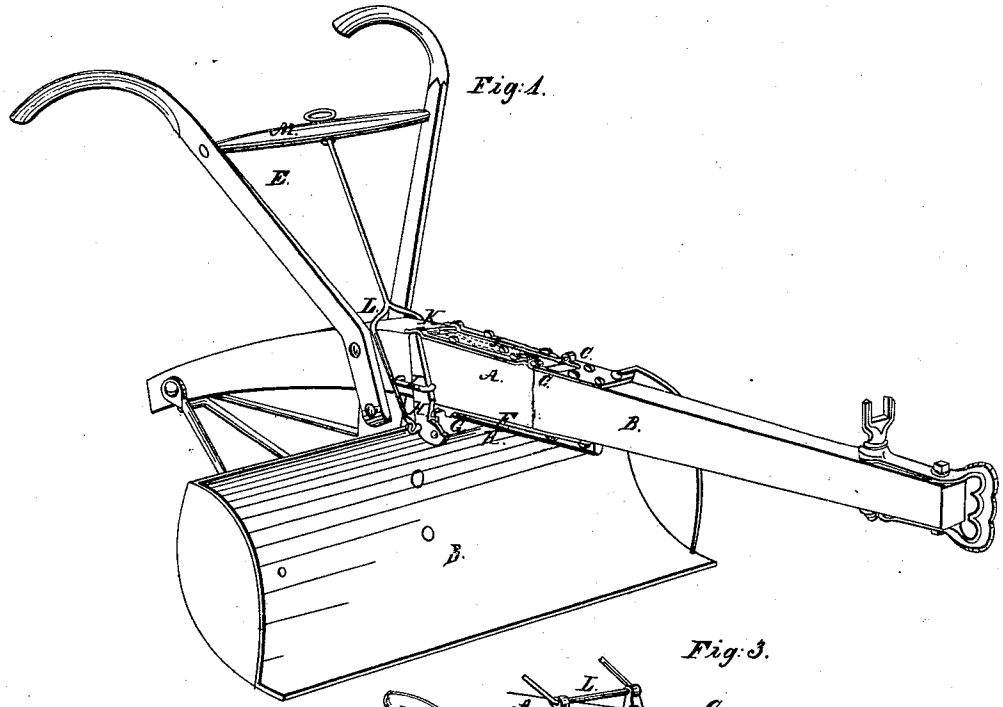


Fig. 3.

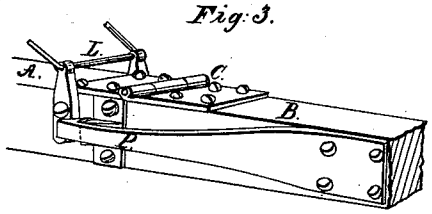


Fig. 2.

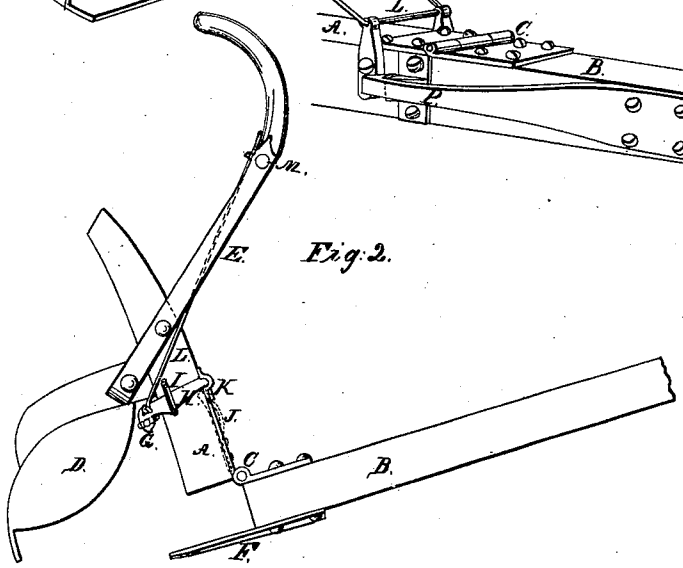


Witnesses:

Frank Millward

Fred Bachrens

Inventor:

William J. Horner

By Knight Bros

Attys

THE GRAPHIC CO. PHOTO-LITH. 39 & 41 PARK PLACE, N.Y.

# United States Patent Office.

WILLIAM J. HORNER, OF CINCINNATI, OHIO.

*Letters Patent No.* 70,719, *dated November* 12, 1867.

## IMPROVED SCRAPER.

The Schedule referred to in these Letters Patent and making part of the same.

TO WHOM IT MAY CONCERN:

Be it known that I, WILLIAM J. HORNER, of Cincinnati, Hamilton county, Ohio, have invented a new and useful Scraper; and I hereby declare the following to be a full, clear, and exact description thereof, reference being had to the accompanying drawings, making part of this specification.

This is an improvement in the class of scrapers used for grading roads and embankments, and which are adapted to be drawn forward by a horse or other animal, and to be controlled by a person walking behind; and consists in a provision for enabling the operator to readily release the scraper from its rigid or effective position, so as to facilitate the dumping of its load of earth by the onward motion of the team; the provision also enabling the ready restoration of the scraper to its effective condition.

Figure 1 is a perspective view of my scraper in its rigid or effective condition.

Figure 2 is a side elevation of the same in its open or non-effective condition.

Figure 3 shows a modification of the catch.

The beam is formed in two parts, A B, united by hinges, C. The shovel D and handles E are united to the rear part A. The two parts A and B of the beam are either engaged to or disengaged from each other by means of a tongue, F, which, extending rearward from the under side of the part B, engages over a movable lip, G, pivoted in the lower end of a pair of vibrating cheeks, H, confined within staples I, and being restored and held to its forward or locking position by a spring, J, which presses upward against a sear, K, that projects from the cheeks H. A trigger, L, which is carried upward through the stretcher M, enables the operator at any time, by pulling thereon, to draw back the cheeks H, and thus to release the tongue F and permit the scraper to assume the position shown in fig. 2, so as to dump the load of earth, which, having been accomplished, the handles E are held fast by the operator, and the advance of the team operates to restore the two parts to their effective position, and in which the lip G and tongue F of themselves spring into lock.

In the modification shown in fig. 3, the single catch on the under side of the beam is replaced by two catches, of which one, P, is shown, one on each side of the beam.

I claim herein as new, and of my invention—

In combination with the divided and hinged beam A B C, shovel D, and handles E, the tongue F, self-locking catch G, and trigger L, substantially as and for the purposes set forth.

In testimony of which invention I hereunto set my hand.

WM. J. HORNER.

Witnesses:

GEO. H. KNIGHT,

JAMES H. LAYMAN.