Sept. 23, 1941. J. H. BREWER 2,256,663

METHOD OF WASHING AMPOULES

Filed Aug. 9, 1940 2 Sheets-Sheet 1

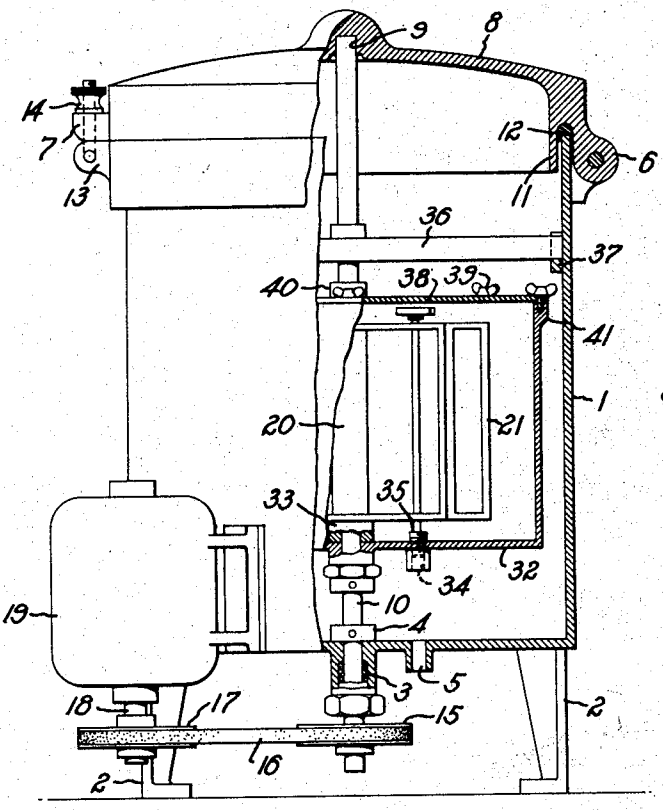

Fig. 1.

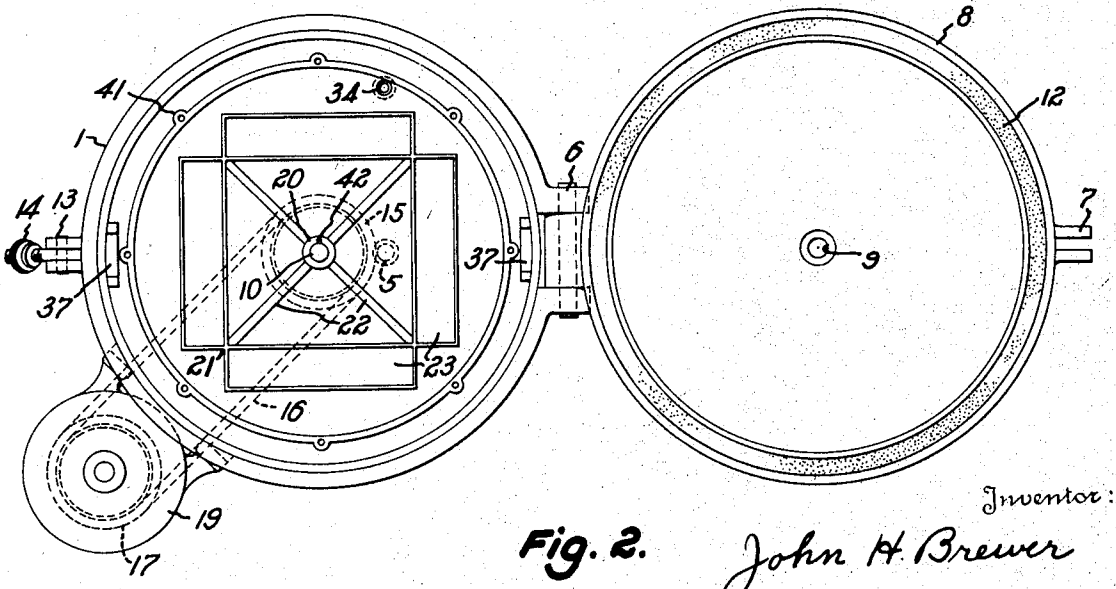

Fig. 2.

Inventor:
John H. Brewer
By Potter, Pierce & Scheffler
his Attorneys.

Sept. 23, 1941. J. H. BREWER 2,256,663

METHOD OF WASHING AMPOULES

Filed Aug. 9, 1940 2 Sheets-Sheet 2

Fig. 3.

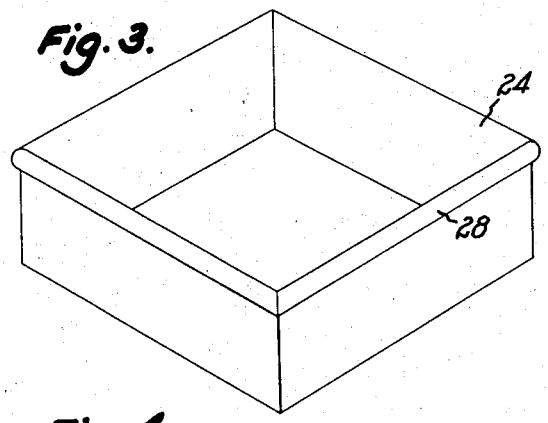

Fig. 6.

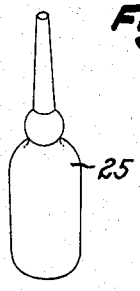

Fig. 4.

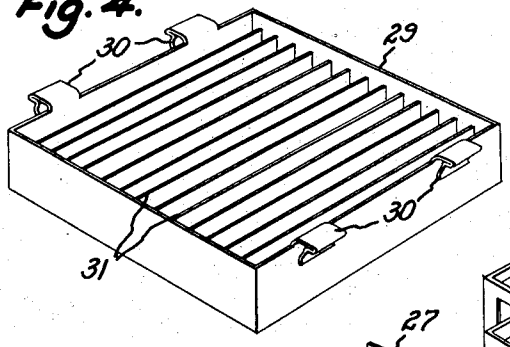

Fig. 7.

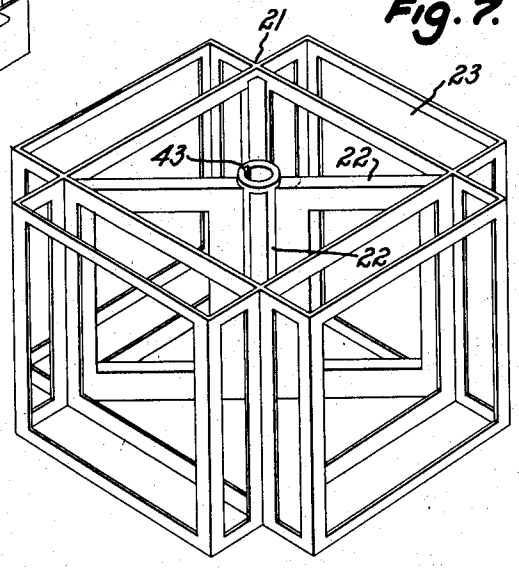

Fig. 5.

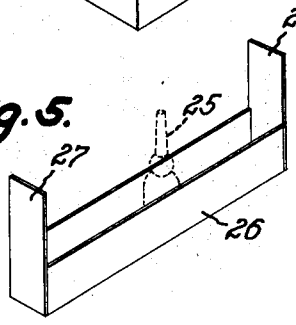

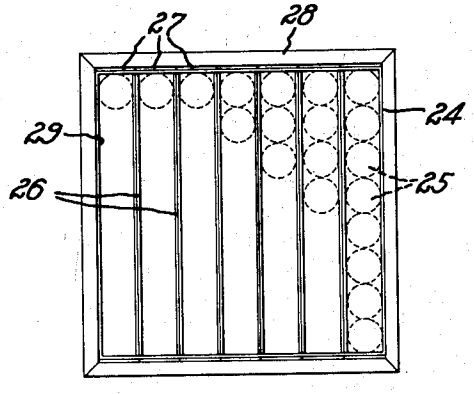

Fig. 9.

Fig. 8.

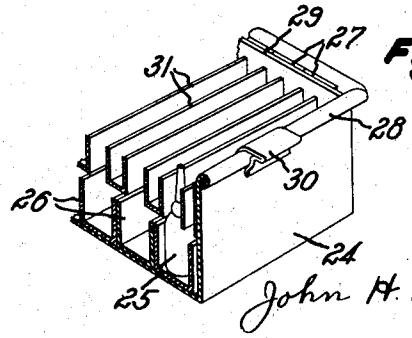

Inventor:
John H. Brewer
By Potter, Pierce & Scheffler
his Attorneys.

Patented Sept. 23, 1941 2,256,663

UNITED STATES PATENT OFFICE

2,256,663

METHOD OF WASHING AMPOULES

John H. Brewer, Baltimore, Md., assignor to Hynson, Westcott & Dunning, Incorporated, Baltimore, Md., a corporation of Maryland

Application August 9, 1940, Serial No. 352,020

2 Claims. (Cl. 141—7)

This invention relates to a method for washing ampoules. More particularly the invention relates to a method for filling ampoules with a washing liquid and for expelling the washing liquid from the ampoules whereby they are cleaned and dried and prepared for use.

Ampoules are glass receptacles of small size, usually cylindrical in shape, and have a capacity of not more than a few cubic centimeters. Generally they are provided with restricted openings which are so small that they will not fill with water on being submerged in it and water will not flow out when the ampoule is turned upside down. It is difficult therefore to introduce and withdraw a washing liquid. The conventional method is to introduce and withdraw the washing liquid by means of small pipes or capillary tubes which are inserted through the necks of the ampoules and it will be appreciated that this method is tedious and troublesome and relatively inefficient.

In accordance with the present invention the washing liquid, e. g. water, is forced into and out of the ampoules by centrifugal force. This method makes possible the simultaneous washing of a large number of ampoules which may be handled as much as is necessary, i. e. the mere reversal of the ampoules from filling position to emptying position, in groups so that the tediousness of handling the individual ampoules is eliminated. The centrifugal method may be carried out by means of a simple, relatively inexpensive and trouble free apparatus.

Apparatus suitable for carrying out the washing method is illustrated in the accompanying drawings in which

Fig. 1 is a side view partly in elevation and partly in section of the complete apparatus,

Fig. 2 is a top view of the apparatus with the lid thrown open and parts removed to reveal the interior,

Fig. 3 is a perspective view of a tray for holding a plurality of ampoule channels shown in Fig. 5,

Fig. 4 is a perspective view of the grill for holding the ampoules and ampoule channels in the tray of Fig. 3,

Fig. 5 is a perspective view of the ampoule channel,

Fig. 6 is a side view of a typical ampoule,

Fig. 7 is a perspective view of the frame or cage for supporting a plurality of magazines of ampoules in the centrifuge,

Fig. 8 is a fragmentary sectional perspective view of a magazine assembly showing the tray, the ampoule channels with an ampoule in place, and the grill in operative relation, and

Fig. 9 is a top plan view of a tray filled with ampoule channels.

Referring particularly to Figs. 1, 2 and 3 of the drawings 1 is the outside casing of the centrifuge in the form of a cylindrical vessel open at the top and standing on legs 2. Casing 1 has a central opening in the bottom provided with a stuffing box 3 and bearing 4 for the vertical shaft 10 which is rotated by the pulley 15, driven by the belt 16 from pulley 17 on the rotating shaft 18 of motor 19, the latter being supported on the housing 1. Shaft 10 extends upwardly through the casing and carries the cylindrical vessel 32 which is secured to and rotates with the shaft 10. Vessel 1 is provided with a permanently open drain 5 and vessel 32 is provided with an opening 34 in its bottom for discharging its contents. Opening 34 is closed by a removable plug 35. Shaft 10 is provided with a vertically extending key 42 which fits the key way 43 (Fig. 7) in the hub 20 of the frame 21 so that vessel 32 and frame 21 rotate together with shaft 10 but frame 21 is readily removable. Vessel 32 is provided with a cover 38 which is securely but removably held in place by screws 39 which extend through the cover 38 into the threaded bosses 41 on the body of vessel 32. Cover 38 is provided with a central opening surrounded by stuffing box 40 for the shaft 10. Shaft 10 extends upwardly through an opening in the removable cross bracket 36, which opening serves as an auxiliary bearing for the shaft 10, and on up into the bearing socket 9 in the cover 8 of the casing 1. Cross bracket 36 rests in supporting slots 37. Cover 8 is hinged at 6 and is held in closed position by the locking member 14 hinged to projection 13 and adapted to engage the lugs 7. Cover 8 is provided with a depending flange 11 and packing 12. The frame 21 is supported on the shaft 10 and spaced from the bottom of the vessel 32 by the bearing collar 33.

Referring now to Fig. 7 of the drawings the frame 21 comprises the hub 20, diagonal or radial bracing members 22 and outer rectangular box shaped compartments 23 adapted to hold the ampoule magazines.

An ampoule magazine comprising the tray 24 (Fig. 3), the ampoule channels 26 (Fig. 5), the grill 29 (Fig. 4) and the ampoules 25 (Fig. 6) all shown in assembled relation in Figs. 8 and 9 will now be described. All of these parts excepting the ampoules which of course are of glass, are made of a suitable material such as

tinned copper of suitable thickness and rigidity. Channels 26 are of suitable width snugly to fit the ampoules 25 and are provided with projecting end portions 27 serving as handles. Tray 24 is substantially square and is of such a size as to hold say seven ampoule channels (see Fig. 9) each channel containing 8 ampoules. Tray 24 is provided with the wired rim 28 which engages lips 30 of the grill 29 to secure the latter in place. Grill 29 comprises a square frame sized to fit telescopically within the side wall of the tray 24 and is provided with grid members 31 adapted to rather closely fit the narrow portions of the ampoules above the shoulders and thus to hold the ampoules in the channels when centrifugal force is applied to expel the washing liquid from the ampoules. Grill 29 is held in place by the lips 30 engaging the wired rim 28 of the tray and thus also holds the ampoules and the ampoule channels in place.

The operation of the apparatus is as follows. Ampoules 25 are placed in channels 26 and the loaded channels are put in tray 24 and grill 29 is inserted. One of the resulting ampoule cartridges is inserted in each of the compartments 23 of the frame 21. Frame 21 is then inserted into vessel 32 which is filled with washing liquid, cover 38 is put on, bracket 36 put in place, cover 8 closed and motor 19 started. In filling the ampoules with washing liquid the magazines are so inserted in compartments 23 that the open ends of the ampoules point toward the hub 20. Upon rotation the washing liquid is forced into the ampoules displacing air. The movement of the washing liquid into the ampoules may be made sufficiently vigorous to exert a cleansing action, for instance when the vessel 32 has a radius of about seven inches and the rotation is at the rate of about 300 R. P. M. When the ampoules have been filled with the washing liquid the machine is stopped, the liquid is drained from vessel 32, the position of the ampoule magazines reversed and the machine operated again to expel the washing liquid. These operations may be repeated if desired with the same or different washing liquids. After expulsion of the final washing liquid the ampoules are clean and dry and ready for use.

It will be appreciated that the apparatus may be made of any suitable size and the frame 21 may be designed to hold a larger number and a larger size of ampoule cartridge. Any apparatus capable of supporting one or more ampoules submerged in a liquid in such positions that centrifugal force may be applied first to force the liquid into the ampoules and then to expel the liquid may serve to carry out the method. The ampoules need not be supported radially. They will fill if their open ends are nearer to the axis than any other part of the ampoule and will empty if the open ends are farther away from the axis than any other part. It is within the scope of my invention to use one centrifugal device for filling the ampoules and another for emptying them. In that event the device for filling the ampoules would comprise a frame for supporting the ampoule cartridge in filling position and the emptying device would comprise a frame for supporting the cartridges in emptying position. The device designed merely for emptying the ampoules will not require a container such as the vessel 32 for liquid. These more or less obvious modifications of the specific apparatus illustrated in the drawings are suggested in order to indicate the scope of the appended claims. It will be appreciated further that the invention is not limited to the washing of ampoules but embraces filling and emptying ampoules and similar containers by centrifugal action for any purpose.

I claim:

1. Method of washing ampoules which comprises submerging the same in a washing liquid, forcing the washing liquid into the ampoules by centrifugal force and expelling the liquid from the ampoules by centrifugal force.

2. Method of washing ampoules which comprises rotating a body of washing liquid about an axis, supporting an ampoule submerged in said body of liquid with its open end spaced from said axis but nearer thereto than any other part of the ampoule, rotating said ampoule with the body of liquid until it is filled with said liquid, separating the ampoule from the body of liquid and rotating the ampoule about an axis with its open end farther away from the axis than any other part of the ampoule to expel the washing liquid from the ampoule.

JOHN H. BREWER.