May 17, 1966 R. M. INGHAM, JR 3,251,112

METHOD OF INSPECTING, GRADING, AND TREATING CLOTH

Original Filed Oct. 10, 1955 6 Sheets-Sheet 1

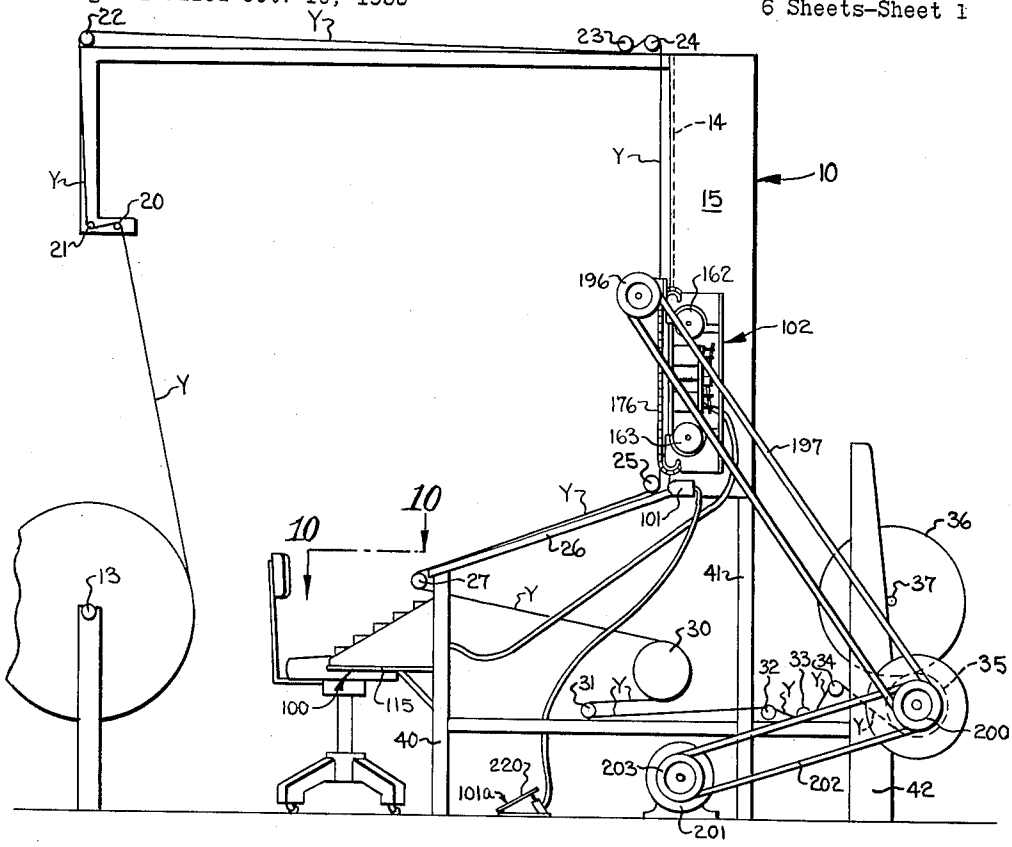

Fig-1

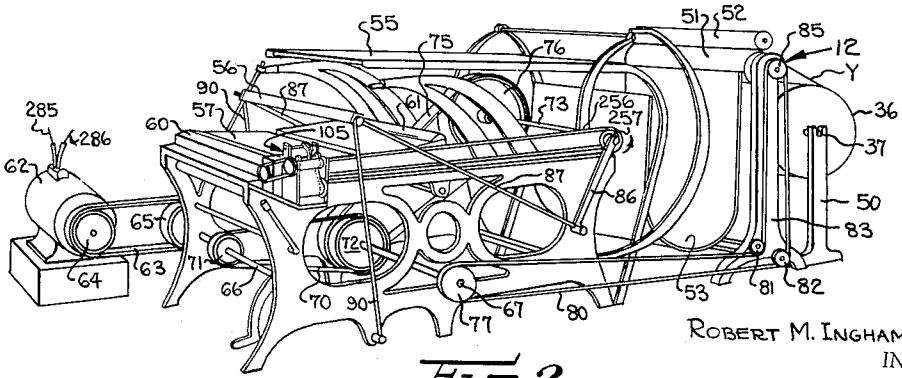

Fig-2

ROBERT M. INGHAM, JR.,
INVENTOR

BY Eaton & Bell

ATTORNEYS

May 17, 1966 R. M. INGHAM, JR 3,251,112

METHOD OF INSPECTING, GRADING, AND TREATING CLOTH

Original Filed Oct. 10, 1955 6 Sheets-Sheet 2

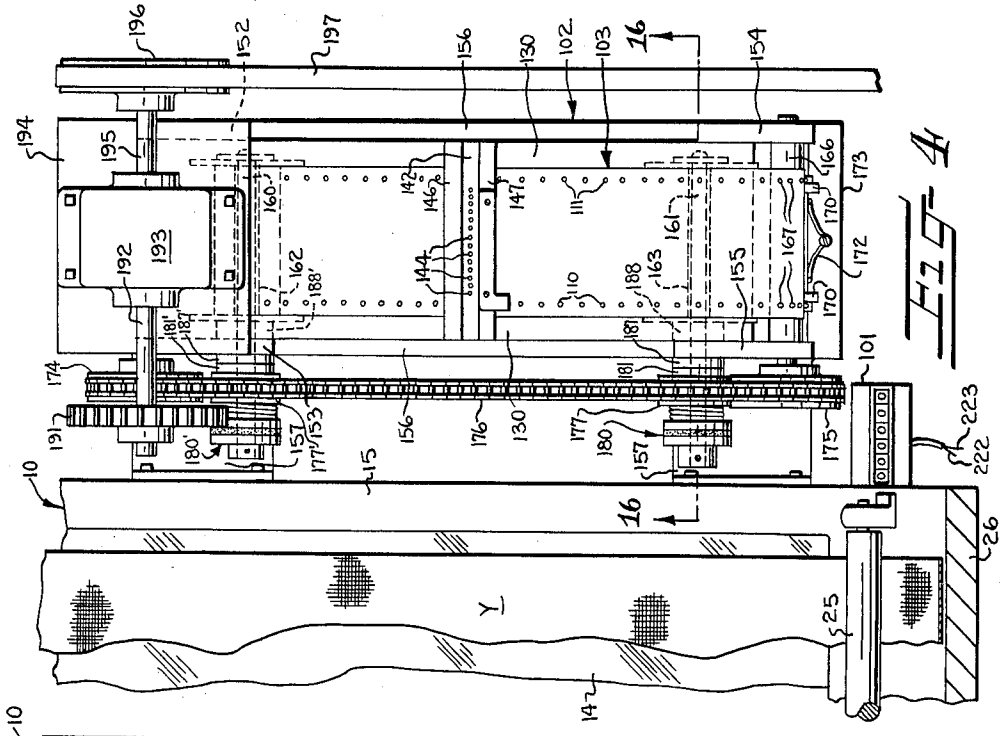

FIG. 4

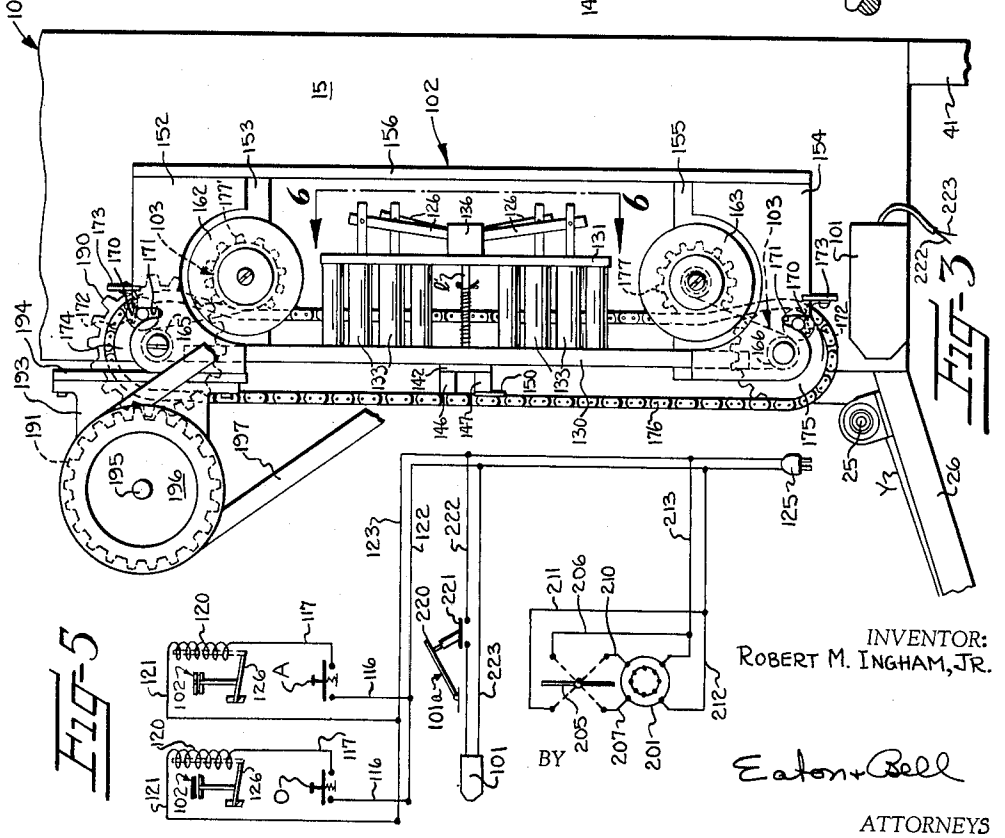

FIG. 3

FIG. 5

INVENTOR:
ROBERT M. INGHAM, JR.

BY Eaton & Bell

ATTORNEYS

May 17, 1966 R. M. INGHAM, JR 3,251,112

METHOD OF INSPECTING, GRADING, AND TREATING CLOTH

Original Filed Oct. 10, 1955 6 Sheets-Sheet 3

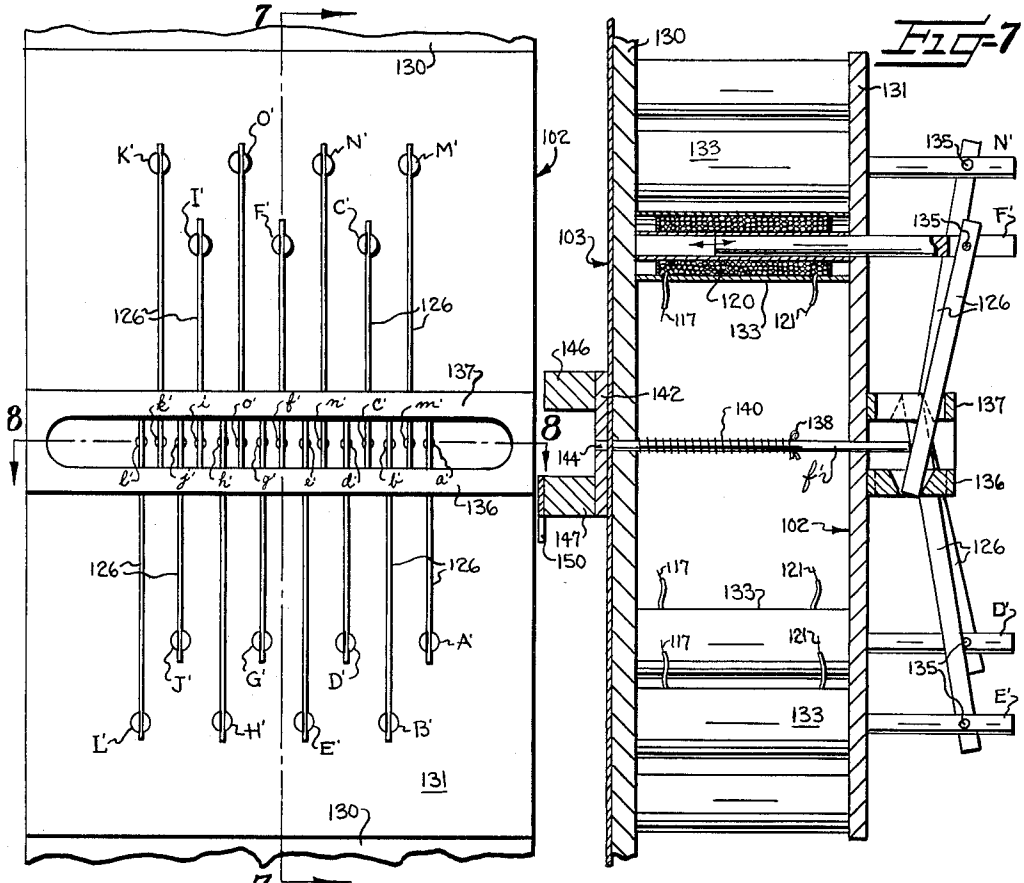

Fig-7

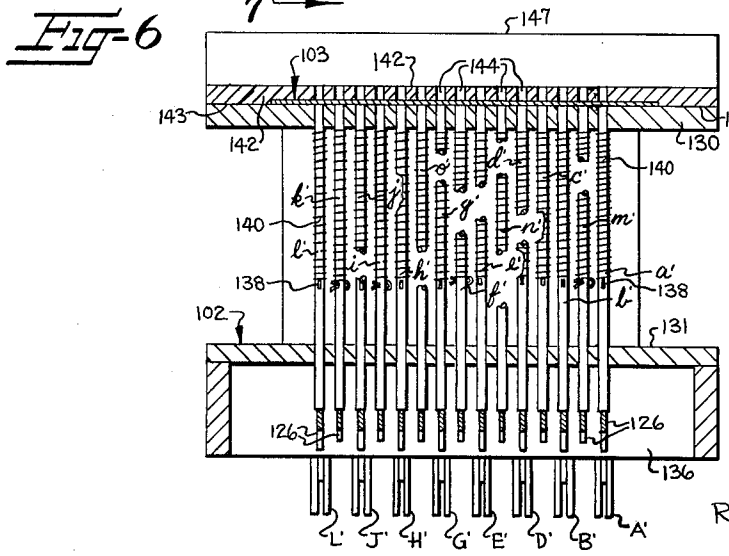

Fig-6

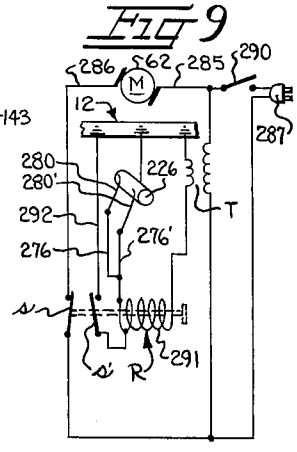

Fig 9

Fig-8

INVENTOR:
ROBERT M. INGHAM, JR.

BY Eaton & Bell

ATTORNEYS

May 17, 1966 R. M. INGHAM, JR 3,251,112

METHOD OF INSPECTING, GRADING, AND TREATING CLOTH

Original Filed Oct. 10, 1955 6 Sheets-Sheet 4

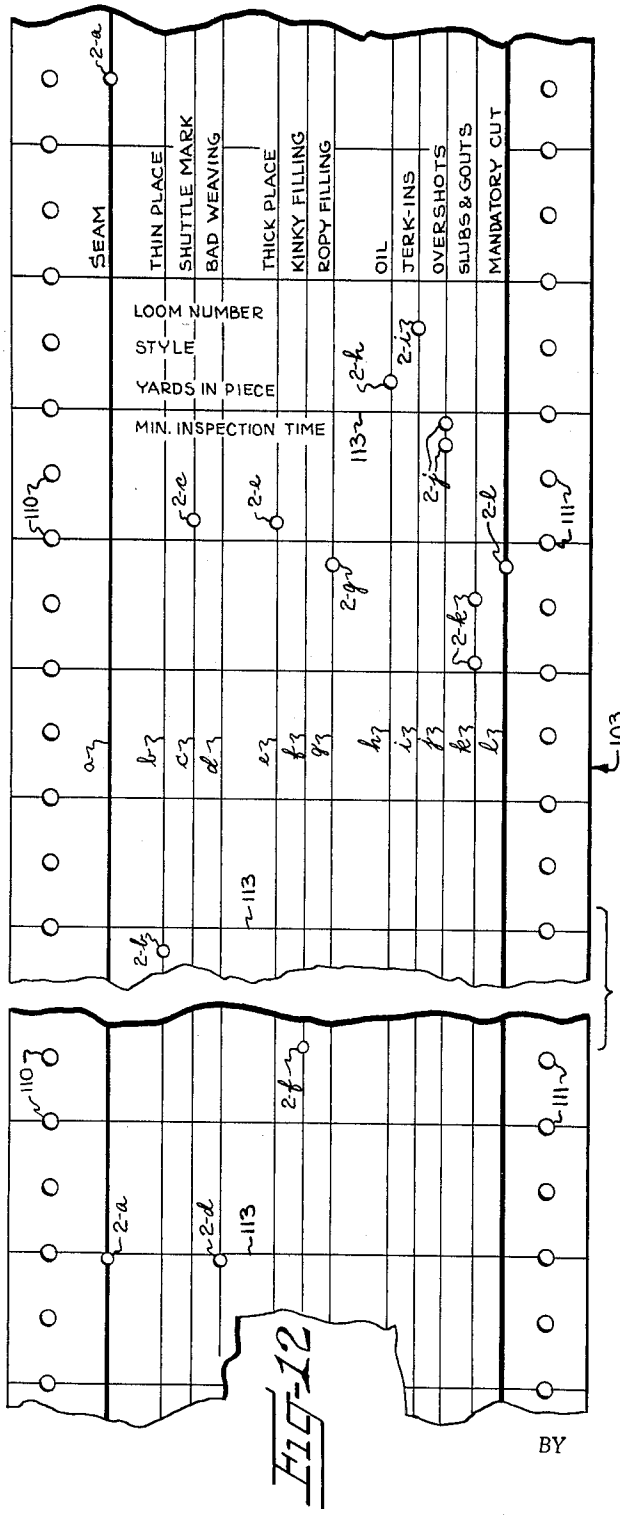

FIG-12

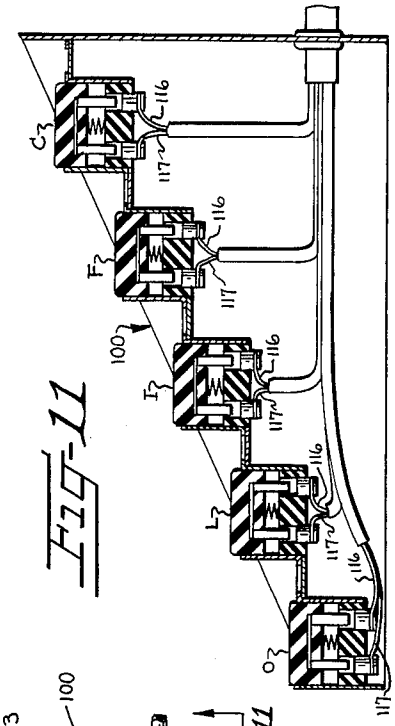

FIG-11

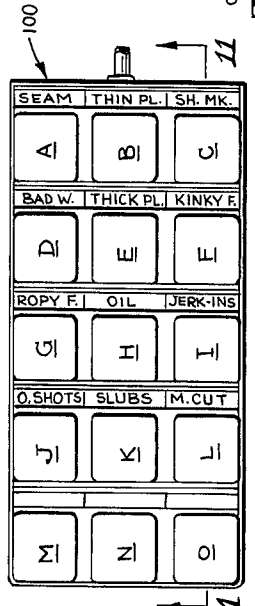

FIG-10

ROBERT M. INGHAM, JR.,
INVENTOR

BY Eaton & Bell

ATTORNEYS

May 17, 1966 R. M. INGHAM, JR 3,251,112

METHOD OF INSPECTING, GRADING, AND TREATING CLOTH

Original Filed Oct. 10, 1955 6 Sheets-Sheet 5

Fig-15

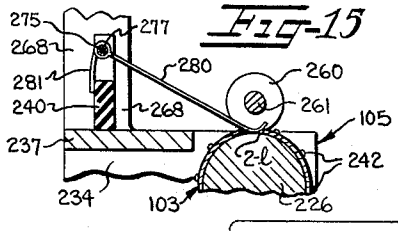

Fig-13

Fig-14

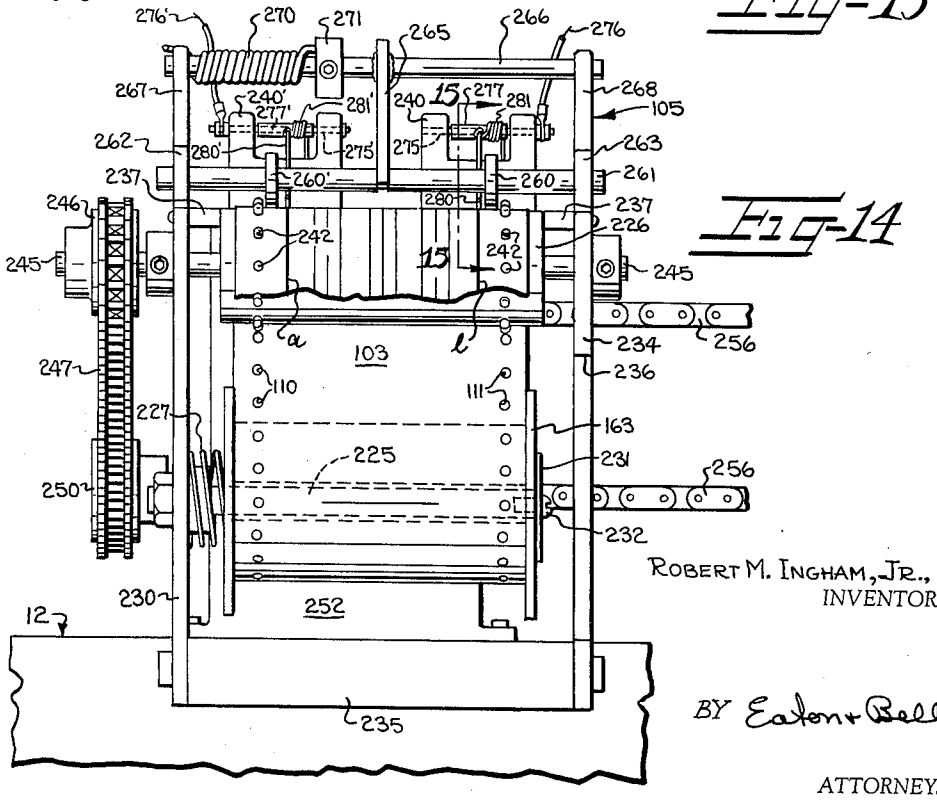

ROBERT M. INGHAM, JR.,
INVENTOR

BY Eaton & Bell

ATTORNEYS

May 17, 1966 R. M. INGHAM, JR 3,251,112

METHOD OF INSPECTING, GRADING, AND TREATING CLOTH

Original Filed Oct. 10, 1955 6 Sheets-Sheet 6

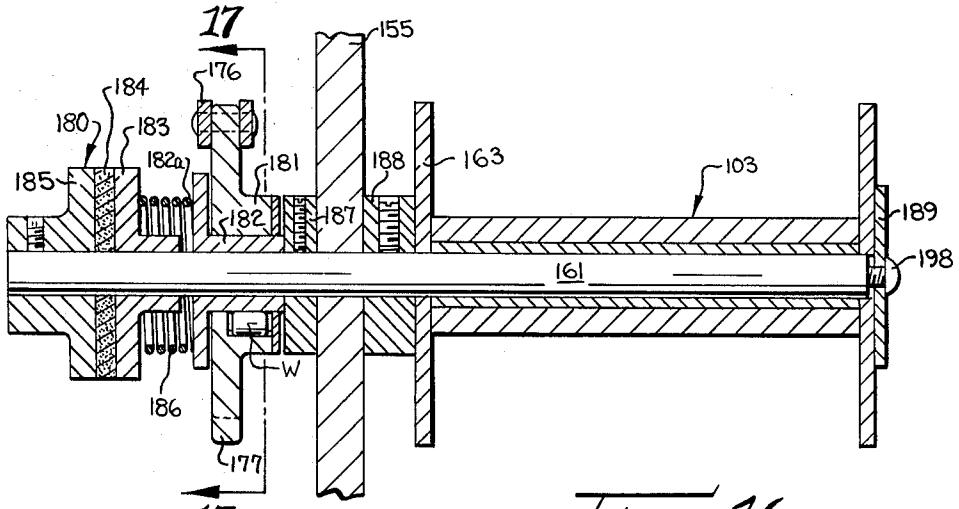

Fig-16

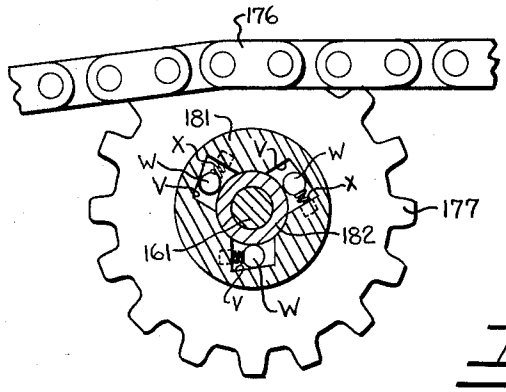

Fig-17

ROBERT M. INGHAM, JR.
INVENTOR

BY Eaton + Bell

ATTORNEYS

United States Patent Office 3,251,112 Patented May 17, 1966

3,251,112

METHOD OF INSPECTING, GRADING, AND TREATING CLOTH

Robert M. Ingham, Jr., Spartanburg, S.C., assignor to Deering Milliken Research Corporation, Spartanburg, S.C., a corporation of Delaware

Continuation of application Ser. No. 40,961, July 5, 1960, which is a continuation of application Ser. No. 539,408, Oct. 10, 1955. This application Oct. 4, 1963, Ser. No. 315,423

6 Claims. (Cl. 28—72)

This application is a continuation of my prior application Serial No. 40,961, filed July 5, 1960 (now abandoned) which in turn is a continuation of my earlier filed application Serial No. 539,408, filed October 10, 1955 (now abandoned).

This invention generally relates to the art of inspecting cloth and analogous web material and more especially, to an improved method and means for recording or tabulating defects in cloth and determining the quality of the cloth from the recorded or tabulated information.

Heretofore, the usual practice is to subject cloth to separate inspection and grading operations. In the inspecting operation, the usual practice is to move the cloth past lighted inspection frames for visual inspection at which time many of the defects, such as slubs and gouts are removed from the cloth by the inspectors. Other defects are suitably marked as by sewing a piece of coarse thread or "string" in one edge of the cloth, so that "graders" can subsequently reinspect the cloth as a whole to determine the sum of the "strung" defects, consider their location and then decide whether the cloth should be cut to remove the bad portions thereof or whether the whole section of cloth should be of first or second quality.

After the inspecting operation, the cloth is usually folded and graded or classified according to quality. Frequently it has been necessary to again pass the folded cloth through still another inspection or checking operation to determine whether portions of the cloth should be cut away to improve the grade.

In order to more accurately determine whether a particular section of cloth should be of first or second quality or grade and to eliminate the grading of cloth, by reinspection of the defects or defect markers on the cloth itself, as a separate operation, it is an object of this invention to provide an improved method of inspecting and grading cloth and eliminating defects therein.

According to this method, cloth defects are recorded upon visual inspection by suitable indicia to distinguish between defects to be removed and those not to be removed. The recorded information is then utilized to automatically stop the movement of cloth in a subsequent operation such as folding to permit indicated sections to be removed. In practice, the cloth is visually inspected while moving a strip of paper or similar material past a given point in synchronism with the movement of the cloth, but at a substantially slower speed than the cloth, and a recording or tabulating device is used to form an identifying mark, aperture, irregularity or other indicia on the paper strip or the like each time a defect is found in the cloth by the inspector. Upon a relatively large number of defects being thus recorded or tabulated by the inspector while inspecting a given length of cloth, the operator or inspector then causes a further identifying mark or opening to be formed on or in the strip to indicate that a given portion of the cloth is to be removed therefrom.

Since the tabulating strip is moved at a substantially slower speed than the cloth, it follows that the length of that portion of the strip corresponding to any given length of the cloth is substantially less than said given length of

the cloth, and the longitudinal distances between adjacent indicia are in a low ratio to the longitudinal distances between these defects in the cloth corresponding to the recorded indicia. The ratio between the speed of the cloth and the speed of the tabulating strip is such that the total lengh of the strip, or portion thereof, corresponding to a given length of cloth of up to, and even exceeding, four hundred yards, is substantially within a single comprehensive view of a person when viewed at a distance whereat the recorded indicia are each and all visible in detail. Thus, the grading of, and locations at which the cloth should be severed to remove undesirable portions therefrom, wherein the length of the cloth is substantially longer than can be surveyed in detail by a person substantially in one view, may be quickly and accurately determined.

As a further step in the improved process, the marks or openings made in a section of the tabulating strip to identify portions of cloth which should be cut away, are used for actuating a stop motion for a cloth-folding machine and will thereby cause the cloth-folding machine to stop automatically at such times as a defective piece of cloth appears at the folding station so the operator of the folding machine may remove the defective portion of cloth.

It is another object of this invention to provide means for recording defects found by the inspector of a section of cloth comprising a platform, platen or plate against which a strip of paper is moved in timed relation to, but slower than, the movement of the cloth as it is inspected. Suitable means such as electrically operable punches are provided in association with the plate for punching or marking the paper strip to identify the location and type of defects in the cloth.

The electrically operable plungers are controlled by individual switches and another switch is electrically connected with a tabulating counter. The counter is used to indicate slubs and gouts found by the inspector. Thus, each time the operator views a defect in the cloth which would normally be identified by "stringing," the operator will momentarily close the appropriate switch defining the defect to cause a corresponding hole or mark to be made in the tabulating strip so that the different types of defects in the cloth are recorded or indicated on the strip of paper. Also, the number of slubs and gouts which the operator removes is recorded on the counter so that the number of slubs and gouts per yard may be calculated. This information is then checked with standards and, if excessive, the weaving, spining, and carding departments are notified so the cause of the excessive slubs and gouts can be found and corrected. This information is also used to evaluate the work output of the operator in each instance. If a portion of cloth is exceedingly defective the inspector may then identify points at which the cloth should be cut by closing the appropriate switch. Of course, the appropriate switch is also closed each time a seam is observed.

Thereafter, the inspected length or roll of cloth is removed from the inspecting machine and is passed through a folding machine, and the tabulating strip is also removed from the inspecting machine and is caused to move in synchronism with the cloth as it is subsequently passed through the folding machine. The holes formed in the strip of paper, for identifying points at which the cloth is to be cut, are used as means to actuate a stop motion on the folding machine so the attendant of the folding machine may then tear the cloth each time the folding machine is stopped to either remove defective sections of the cloth or to separate the cloth at the seams.

Some of the objects of the invention having been stated, other objects will appear as the description proceeds when

taken in connection with the accompanying drawings, in which:

FIGURE 1 is a somewhat schematic side elevation of an inspecting frame or machine showing the improved recording and tabulating apparatus thereon for moving the tabulating strip or web in timed relation to movement of the cloth during its inspection;

FIGURE 2 is a somewhat schematic perspective view of a typical folding machine showing the means for receiving the tabulating strip after it has been removed from the apparatus shown in FIGURE 1 and for actuating the stop motion of the folding machine upon holes in the tabulating strip identifying points of cut moving past a detecting means;

FIGURE 3 is an enlarged fragmentary view of the right-hand central portion of FIGURE 1 showing, more in detail, the device for feeding and punching holes in the tabulating strip at the inspection machine;

FIGURE 4 is a fragmentary view looking at the left-hand side of FIGURE 3;

FIGURE 5 is a schematic diagram of an electrical circuit for the cloth-inspecting machine of FIGURE 1 and for the tabulating device, but omitting many of the switches, punches and solenoids associated with the tabulating device;

FIGURE 6 is an enlarged fragmentary detail looking at the back of the strip-punching or tabulating unit substantially along line 6—6 in FIGURE 3;

FIGURE 7 is a longitudinal sectional view taken substantially along line 7—7 in FIGURE 6;

FIGURE 8 is a transverse sectional view taken substantially along line 8—8 in FIGURE 6;

FIGURE 9 is a schematic diagram of an electrical stop motion for the cloth-folding machine and showing the circuit for stopping the machine upon a hole in the tabulating strip registering with a detecting means;

FIGURE 10 is an enlarged plan view of the switch unit for controlling the various punches shown in FIGURES 3, 5, 6 and 7, taken substantially along line 10—10 in FIGURE 1, showing the switch unit removed from the inspecting machine;

FIGURE 11 is a schematic longitudinal vertical sectional view taken substantially along line 11—11 in FIGURE 10;

FIGURE 12 is an enlarged view of a portion of the tabulating strip after it has passed through the punching or tabulating mechanism and a corresponding section of cloth has been inspected;

FIGURE 13 is an enlarged front elevation of the playback or transcribing mechanism shown in the central left-hand portion of FIGURE 2;

FIGURE 14 is a view looking at the right-hand side of FIGURE 13 with the tabulating strip partially broken away for purposes of clarity;

FIGURE 15 is a fragmentary view taken substantially along line 15—15 in FIGURE 14;

FIGURE 16 is an enlarged longitudinal sectional view through the over-riding and slip clutch mechanisms for imparting rotation to one of the reels and maintaining tension in the tabulating strip, taken substantially along line 16—16 in FIGURE 4;

FIGURE 17 is a fragmentary view, partially in section, taken substantially along line 17—17 in FIGURE 16.

Referring more specifically to the drawings, a typical cloth-inspecting machine is broadly designated at 10 in FIGURE 1 and a typical cloth-folding machine is broadly designated at 12 in FIGURE 2. As is usual, during the cloth inspection process, cloth Y is drawn from a roll 13 past an illuminated screen 14 carried by a housing 15 having suitable illuminating means therein, not shown. A series of idler rolls 20 to 25, inclusive, are used for guiding the cloth Y from the roll 13 to and past the front surface of the illuminated screen 14. The illuminated screen 14 is usually made from a sheet of translucent material such as glass or plastic.

The cloth Y passes from beneath the roll 25 along the upper surface of an inclined table 26 and then partially around another idler roll 27 and successively passes in engagement with a series of rolls 30 to 34, inclusive, from whence it passes to a suitable take-up means shown in the form of a roll 35 upon which a roll of cloth 36 is formed about a shaft or roll 37. The rolls 20 to 25, 27 and 30 to 35, inclusive, may be supported and journaled in any desired manner and are, therefore, only shown schematically in FIGURE 1.

The table 26 and housing 15 are supported on suitable front and rear legs 40, 41 and opposed end portions of the roll or shaft 37, which supports the roll of cloth 36 as it is taken up, bear against a pair of standards 42, only one of which is shown in FIGURE 1, positioned immediately forwardly of the take-up roll 35.

Any suitable folding machine may be used and the cloth-folding machine 12 shown in FIGURE 2 is conventional and of a type such as is manufactured by Curtis and Marble Machine Company, 72 Cambridge Street, Worcester, Massachusetts, and as is disclosed in their bulletin No. 111. A similar machine is also disclosed in U.S. Patent No. 604,749, dated May 31, 1898, and issued to Edward Hall. Accordingly, only so much of the cloth folding machine 12 will be described as is deemed necessary to a clear understanding of the present invention.

After the cloth Y has been inspected, the roll 36, thus formed on the shaft 37, is mounted on standards 50, only one of which is shown in FIGURE 2, and the cloth is drawn therefrom between feed rolls 51, 52, through a scray 53 and then upwardly and over a platform 55 which directs the cloth to a folding blade 56. The folding blade 56 operates in a conventional manner to fold the cloth on a platform 57, as is fully disclosed in said Patent No. 604,749. Also, the folding blade 56 draws the cloth between a pair of automatically operable gripping devices 60, 61 which alternately grip as the folding blade 56 moves away from the respective gripping devices 60, 61.

The folding machine 12 is driven by an electric motor 62 connected by a belt 63 and pulleys 64, 65 to a shaft 66 journaled in the frame of the cloth folding machine 12. An idler shaft 67, also journaled in said frame, is driven by shaft 66 through the medium of a belt 70 and pulleys 71, 72. The shaft 67, in turn, drives a crank shaft 73 and the feed rolls 51, 52. The crank shaft 73 is also suitably journaled in the frame of the cloth-folding machine 12 and is connected with shaft 67 by means of the pulley 72, a belt 75 and a pulley 76. The shaft 67 drives the feed rolls 51, 52 through the medium of a pulley 77 about which a belt 80 is entrained and the upper and lower runs of the belt 80 engage idler wheels or pulleys 81, 82 journaled on one of a pair of standards 83 in whose upper portions the feed rolls 51, 52 are suitably journaled. The belt 80 also engages a pulley 85 fixed to the feed roll 51.

The folding blade 56 is reciprocated by means of a pair of cranks 86, only one of which is shown in FIGURE 2, fixed on shaft 73, and the free end of each crank 86 has a link 87 pivotally connected thereto whose other end is pivotally connected to the folding blade 56. A link 90 is also pivotally connected to each end of the folding blade 56 and extends downwardly therefrom and is connected to the lower portion of the corresponding side of the cloth folding machine 12 to assist in guiding the cloth-folding blade 56 during reciprocation thereof. As heretofore stated, the means for reciprocating the folding blade 56 is fully disclosed in said Patent No. 604,749 and a similar means is also disclosed in U.S. Patent No. 2,572,289, issued to Grover C. Truslow et al. on October 23, 1951. The description of the means for reciprocating the folding blade 56 is given merely for the purpose of illustrating the co-action between the improved tabulating strip and the drive mechanism for the cloth folding machine 12.

As heretofore stated, the improved cloth processing method includes the steps of actuating one of a plurality

of switches on a switch unit broadly designated at **100** which, as shown in FIGURE 1, is positioned within easy reach of the inspector. Each of the switches denotes a particular type of defect which is observed by the inspector as the cloth Y move past the screen **14** on the cloth-inspecting machine **10** in FIGURE 1. Each time any one of the switches of the switch unit **100** is closed by the inspector, this actuates a corresponding punch or marking element plunger, to be presently described, associated with an improved recording or tabulating device broadly designated at **102**.

As will be presently described, the recording or tabulating device **102** has means thereon for supporting and imparting movement to a tabulating strip made from a web of pliable material such as paper and which is broadly designated at **103**. The tabulating strip **103** is moved in synchronism with the cloth being inspected but preferably at a slower rate of speed and, upon actuation of any one of the punches or marking elements of the recording or tabulating device **102** a corresponding hole or mark is made on the tabulating strip **103**. A counter **101** is also provided adjacent the tabulating device **102** and is operated by a foot pedal switch **101***a* (FIGURES 1 and 5) to record each defect such as slubs or gouts burled or removed by the inspector.

After the roll of cloth **36** is completely formed, the portion of the tabulating strip corresponding thereto is cut away or torn from the remaining portion of the tabulating strip and removed from the tabulating or recording device **102** and mounted on a play-back mechanism or transcribing device broadly designated at **105** and which is positioned on or adjacent the cloth-folding machine **12** in FIGURE 2.

As the folding blade **56** draws the cloth and folds it on the platform **57**, the transcribing device or play-back mechanism **105** imparts corresponding movement to the tape or strip **103** mounted thereon and feeler devices, to be later described, detect the presence of certain marks or holes in the tabulating strip to thereby actuate a conventional stop motion to break the electric circuit, to the motor **62** and stop the machine, so the operator may remove the defective sections of the cloth or may separate adjacent non-defective sections or cuts of the cloth at the seams.

Tabulating strip

A portion of a tabulating strip **103** is shown in detail in FIGURE 12. Opposite side portions of the strip are preferably provided with rows of traction holes **110, 111** for maintaining the tabulating strip in engagement with rolls of the tabulating or recording device **102** and roll of the transcribing device or play-back mechanism **105** (FIGURES 1 and 2, respectively). The strip **103** is provided with evenly spaced transverse lines **113** superimposed thereon as by being printed thereon, and these lines denote given lengths of cloth. For example, the transverse lines **113** may be spaced at one inch intervals, each representative of ten yards of cloth.

The tabulating strip **103** also has a plurality of transversely spaced longitudinally extending lines or marks superimposed or printed thereon which are indicated at *a* through *l* and which correspond with respective push-button switches A to L, inclusive associated with the switch unit **100** as will be more fully described hereinafter. The switch unit **100** also includes additional push-button switches such as are indicated at M, N, and O, which may be used in the event that it is desired to provide additional corresponding longitudinal lines on the tabulating strip **103**.

Upon the termination of inspection of each length or roll of cloth Y on the cloth-inspecting machine **10** of FIGURE 1, it is preferable that the corresponding portion of the tabulating strip **103** be printed with words defining the meaning of the various longitudinal lines *a* through *l* on the tabulating strip **103**, as shown in the right-hand portion of FIGURE 12. These words also preferably include places at which the inspector may write the loom number, style, the number of yards in the piece inspected and the amount of time spent in the inspection process.

As is apparent, by referring to FIGURE 12, the latter printed matter signifies that any holes or indicia formed along line *a* designates the location of a seam or seams in the corresponding section of cloth; any holes or indicia along the line *b* each designates the location of a thin place in the cloth; any holes or indicia made along the line *c* each indicates the location of a shuttle mark; any holes or indicia made along the line *d* indicate the location of points in which bad weaving has occurred in the cloth and any holes or indicia along the line *e* indicates points along the length of the cloth in which thick places may have been present.

Also, any holes or indicia made along the lines *f* through *j*, respectively, designate points in the corresponding portions of the cloth in which kinky filling, ropy filling, oil, jerk-in filling, and over-shots have been found by the inspector and any holes made along line *l* indicate points at which a mandatory cut is required to be made in the cloth.

Due to the predominately large number of slubs and gouts usually found during inspection of cloth, the longitudinal line *k* on the tabulating strip **103** of FIGURE 12 may be omitted and the number of slubs and gouts which have accumulated as indicated on the counter **101** (FIGURES 1, 3, 4 and 5) may be written by the inspector adjacent the words "slubs and gouts" on the tabulating strip **103**.

As is the normal practice, the inspector usually uses a burling iron (tweeze like device) to actually remove the slubs or gouts. Once removed, they no longer are a "stringable defect" and thus they should not be recorded on the tabulating strip for grading purposes or counted as a defect in the grading. They are, however, a serious matter, for the inspector spends a great deal of time removing them, and this represents additional labor in the manufacture of the cloth, the counter **101** being used for counting these removed defects. The total number of slubs or gouts burled or removed is then recorded on the tabulating strip at the time that the total of all defects are entered thereon, merely by referring to counter **101**. This permits proper evaluation of the inspector's actual total work, and also provides needed information useful in determining any manufacturing processing such as the weaving, spinning, carding, etc., which need corrections or attention.

Switch unit and tabulating device

The switch unit **100** may be of any desired or conventional construction and is preferably supported on a suitable platform **115** supported on one of the front legs **40** of the table **26** of the inspection machine **10** adjacent the inspector. A few of the individual switches associated with the switch unit **100** are shown somewhat schematically in FIGURE 11 and, since any desired type of normally open push-button switches may be used, a detailed description thereof will not be given.

The switches A to O, inclusive, are electrically connected in parallel with each other and each is in series with a corresponding solenoid coil. Said coils control respective solenoid plungers A′ to O′ inclusive, associated with the improved tabulating or recording device **102** (FIGURES 6 and 7).

The switches A through O may be connected with said coils in the manner in which each of two of such switches are shown in FIGURE 5 wherein it will be observed that each switch has conductors **116, 117** connected to opposite sides thereof, the end of conductor **117** remote from each switch being connected to one end of the corresponding coil, each of said coils being indicated at **120**. The other end of each coil **120** has a conductor **121** connected thereto and the ends of the conductors **116, 121**

remote from each of said switches and remote from each of said coils **120** are connected to respective lead wires or conductors **122, 123**. The conductors **122, 123** are shown in FIGURE 5 as being connected to opposite sides of a plug **125** adapted to be connected to a suitable source of electrical energy, not shown. The solenoid plungers A' to O', inclusive, control respective marking elements or punches *a'* to *o'*, inclusive, each by means of a corresponding link or lever **126**. In other words, the switch unit **100** includes fifteen normally opened switches A through O which control fifteen respective solenoid plungers A' through O' through the medium of fifteen coils **120**, and said fifteen plungers are connected by fifteen levers or links **126** to respective marking elements or punches *a'* through *o'* (FIGURES 6, 7, 8, 10, and 11).

In this instance, the punches *n'*, *m'*, *o'* are not used and, accordingly, the remaining twelve punches *a'* through *l'* coincide with the longitudinal lines *a* through *l* on the tabulating strip **103** (FIGURE 10) when it is passed through the recording or tabulating mechanism **102** in a manner to be presently described. Obviously, the number of punches might be more or less than fifteen, as may be desired or necessary for the individual case.

The tabulating or recording device **102** includes a pair of spaced parallel guide plates **130, 131** which are slidably penetrated by the punches *a'* through *o'* (FIGURES 7 and 8). The front or outer plate **130** may also be termed as a platen in engagement with which the tabulating strip **103** passes with movement of the cloth Y. The plate **131** is supported in spaced relation to the plate **130** by means of a plurality of tubular housing members **133** each of which has one of said solenoid coils **120** therein, there being one of the solenoid coils **120** surrounding a portion of each of the solenoid plungers A' through O'. It will be observed in FIGURE 7 that the solenoid plungers each loosely or slidably penetrate the inner plate **131** and each of these plungers is bifurcated and has the outer end of the corresponding link **126** pivotally connected thereto, as at **135**.

Those links **126** connected to the solenoid plungers A', B', D', E', G', H', J', and L' extend inwardly or upwardly in FIGURE 6 and are guided in suitable slots provided in a combination pivot and guide bar **136** suitably secured to the rear surface of the guide plate **131**. The ends of the links **126** remote from the plungers are pivotally mounted in a combination pivot and guide bar **137** spaced from the bar **136**. Conversely, the ends of the links or levers **126** remote from the solenoid plungers C', F', I', K', M', N' and O' loosely penetrate suitable slots provided therefore in the bar **137** and are pivotally supported in the bar **136**. The medial portions of the links **126** between the two bars **136, 137** engage corresponding ends of the marking elements or punches *a'* through *o'*.

Each of the punches *a'* through *o'* is urged outwardly or to the right in FIGURE 7 by a compression spring **140** which surrounds a portion of the same and one end of which bears against a stop or pin **138** and the other end of which bears against the rear surface of the platen **130**. The arrangement of the solenoid plungers and links **126** is such that all the punches *a'* through *o'* are disposed in a row extending transverly of the platen **130** and there will be observed in FIGURES 7 and 8 a die plate **142** which extends transversely of and is spaced outwardly of the outer surface of the platen **130** to permit the tabulating strip **103** to pass between the platen **130** and the die plate **142**. Opposite ends of the die plate **142** have projections **143** thereon which engage the outer surface of and are suitably secured to the plate **130** for maintaining the central portion of the die plate **142** in proper spaced relation to the platen **130**. The die plate **142** has a row of holes or apertures **144** therein, there being one of these apertures corresponding to each of the plungers or marking elements *a'* through *o'* as best shown in FIGURE 8.

As heretofore stated, the solenoid coils **120** for the solenoid plungers A' through O' are connected in series with the respective push-button switches A to O and it is apparent that, upon any one of the switches A to O being closed, the corresponding solenoid coil **120** is energized to cause movement to be imparted to the corresponding one of the punches *a'* through *o'* so it will project through the paper strip **103** and form a hole therein at the corresponding one of the lines *a* through *l* shown on the tabulating strip **103** in FIGURE 12 as the latter punch passes into the corresponding opening **144**.

It will be noted that the die plate **142** is relatively narrower and has a pair of spaced reinforcing ribs **146, 147** suitably secured to the outer surface thereof or integral therewith. The outer surface of the projection or rib **147** has an L-shaped member **150** suitably secured thereto, one of the legs of which projects outwardly in off-set relation to the path of travel of the strip **103** as shown in FIGURE 4 and this L-shaped member **150** may be used as a guide for properly positioning the rubber stamp used for printing the printed matter on the right-hand portion of the strip **103** as shown in FIGURE 12.

Referring to FIGURES 3 and 4, it will be observed that the upper and lower ends of the platen **130** are supported between respective pairs of spaced frame members **152, 153** and **154, 155** whose rear ends are suitably secured to a vertically disposed plate **156**. The vertically disposed plate **156** has a pair of inwardly projecting portions **157** thereon which are suitably secured to the housing **15** of the cloth-inspecting machine **10**. The frame members **153, 155** have respective spindles or shafts **160, 161** suitably journaled therein for receiving respective reels **162, 163** thereon. The reels **162, 163** are suitably removably secured on the spindles **160, 161**, as will be later described.

It will be noted that the tabulating strip **103** is let-off from the reel **162** and passes partially around the roller **165** and along the front surface of the platen **130**, then beneath and partially around a roller **166** and to the reel **163**. Each of the rollers **165, 166** preferably has a pair of circular rows of spaced traction pins **167** thereon which are adapted to engage with the holes **110, 111** (FIGURE 12) in the tabulating strip **103**.

In order to further assist in maintaining the tabulating strip **103** in engagement with the rollers **165, 166**, each of the rollers **165, 166** is engaged by corresponding pressure rolls **170**, reduced opposite ends of the pressure rolls **170** being loosely mounted in corresponding notches **171** provided in the upper and lower frame members **152** to **155**, inclusive. These pressure rolls **170** are preferably mounted in such a manner as to be easily removed by the operator for the purpose of threading the strip **103** through the tabulating device **102**. To this end, the reduced medial portion of each roller **170** is retained in the respective notches **171** by a leaf spring **172** (FIGURE 3) carried by a bar **173**. The bars **173** are suitably supported by the respective pairs of frame members **152, 153** and **154, 155**. The rollers **165, 166** are suitably journaled in the respective pairs of frame members **152, 153** and **154, 155**, and it will be observed in FIGURE 4 that reduced corresponding ends of the rollers **165, 166** have respective sprocket wheels **174, 175** fixed thereon which are connected by an endless sprocket chain **176**.

Any suitable means may be provided for imparting rotation to the reels **162, 163** for taking-up the tabulating strip **103** with respective upward and downward movements of the tabulating strip and the cloth Y in FIGURES 3 and 4. One embodiment of such means is disclosed in the present drawings with particular reference being made to FIGURES 3, 4, 16 and 17. It will be observed in FIGURES 3 and 4 that the rear run of the sprocket chain **176** engages a pair of sprocket wheels **177, 177'** which, through overriding and slip clutch mechanisms, to be presently described, alternately impart ro-

tation to the respective spindles **161**, **160**, depending upon the direction of movement of the cloth Y and the tabulating strip **103**. The slip clutch mechanisms are broadly designated at **180**, **180'** and the overriding clutch mechanisms are formed as parts of the sprocket wheels **177**, **177'**. Since the overriding clutch mechanisms associated with the respective sprocket wheels **177**, **177'** may be identical, except being operable in opposite directions, only the overriding clutch mechanism associated with the sprocket wheel **177** will be described in detail and like parts of the overriding clutch mechanism associated with the sprocket wheel **177'**, where visible, will bear the same reference characters with the prime notation added. Also, since both of the slip clutch mechanisms **180**, **180'** are identical, only the slip clutch mechanism **180** will be described in detail and like parts associated with slip clutch mechanism **180'** will bear the same reference characters with the prime notation added.

Referring to FIGURES 16 and 17, the overriding and slip clutch mechanisms associated with the spindle or shaft **161** are illustrated wherein it will be observed that the overriding clutch mechanism is in the form of a hub **181**, integral with sprocket wheel **177**, which is loosely mounted on a tubular member or hub member **182** having a disk **182***a* on its outer end which serves as a spring seat for the friction clutch **180**. The tubular member **182** and disk **182***a* are loosely mounted on the shaft **161**. The friction clutch **180** also comprises a rotor element or disk **183**, a friction disk **184** and a stator element or disk **185**, the latter being adjustably secured on the outer end of shaft **161**. A compression spring **186** is positioned between and its two ends are anchored in the proximal surfaces of the disks **182***a* and **183** to transmit rotary movement from disk **182***a* to disk **183**, and to normally urge the disk **183** against the friction disk **184**. The stator or disk **185** is adjustable longitudinally of the shaft **161** to permit varying the amount of pressure exerted thereon by the disks **184**, **183**, and the spring **186**.

The inner end of the tubular member or hub **182** contacts a collar **187** fixed on the shaft or spindle **161** and the inner surface of the collar **187** is adapted to move, at times, in sliding rotational engagement with the outer surface of the frame member **155**. The sprocket wheel **177** and hub **181** are loosely positioned between disk **182***a* and collar **187**. The inner surface of frame member **155** is engaged by a collar **188** fixed on the shaft or spindle **161** and against which the corresponding reel **163** is secured by means of disk or washer **189** and screw **198**, the screw **198** being threaded into the corresponding end of the spindle shaft **161**.

The hub **181** of sprocket wheel **177** is loose on the tubular member **182** and its inner periphery is provided with a plurality of circularly spaced slots or notches V therein whose bottoms, or surfaces remote from the tubular member **182**, are disposed at an angle with respect to a line drawn from the center of the shaft **161** and bisecting each of the slots V. A ball or roller W is disposed in each of the slots or notches V, the rollers W being of substantially greater diameter than the shallowest portions of the slots V and of substantially lesser diameter than the deepest portions of the slots V. The deepest portions of the slots V have respective relatively light compression springs X therein which urge the respective rollers W toward the small ends of the respective slots V and, accordingly, into engagement with the angular surfaces or bottoms of the slots V and the periphery of the tubular member **182**. It is apparent that the small ends of the slots such as those indicated at V in FIGURE 17 face in the opposite direction in the hub **181'** from that in which the small ends of the slots V face in the sprocket wheel **177** (FIGURE 17).

In operation, with movement of the sprocket wheel **175** in a counterclockwise direction in FIGURE 3, the tabulating strip **103** is caused to move downwardly and rotation is imparted to the sprocket wheel **177** in a clockwise direction in FIGURES 3 and 17. Since the small ends of the slots V then tend to move toward the rollers W, it is apparent that the sprocket wheel **177** then imparts rotation to the tubular member **182**, disk **182***a*, spring **186** and the rotor friction clutch member **183**. Of course, the clutch member **183** then imparts rotation to the disks **184**, **185** and shaft **161**, but the amount of pressure exerted by the spring **186** permits rotor element or disk **183** to rotate relative to the shaft **161** while maintaining tension in the tabulating strip **103** as it is taken up on the reel **163**.

On the other hand, with rotation of the sprocket wheels **174**, **175** in the opposite or clockwise direction in FIGURE 3, it is apparent that the sprocket wheels **177**, **177'** are then driven in a counterclockwise direction so the large ends of the slots V (FIGURE 17) tend to move toward the rollers W so the sprocket wheel **177** may rotate substantially freely relative to the shaft **161** while the sprocket wheel **177'** drives the shaft **160** and with the result that the tabulating strip **103** is taken up by the reel **162** and maintained taut between the reel **163** and the shaft **160**, since the hub **181** and sprocket wheel **177** are loosely positioned between the disk **182***a* and collar **187**.

It is, of course, apparent that the sprocket wheel **177'** also idles with movement of the sprocket wheels **174**, **175** in a counterclockwise direction in FIGURE 3 as the sprocket wheel **177** imparts rotation to the shaft or spindle **161** through the intervening slip clutch mechanism **180**.

As heretofore stated, means are provided to impart movement to the tabulating strip **103**, while on the tabulating device **102**, in synchronism with the movement of the cloth Y, but at a proportionally reduced speed wherein, for example, the tabulating strip **103** moves one inch for each ten yards of movement of the cloth Y. To this end, it will be observed in FIGURES 3 and 4 that the reduced end of the roller **165** having the sprocket wheel **174** thereon also has a gear **190** fixed thereon which meshes with a gear **191** fixed on an output shaft **192** of a suitable gear reduction or speed reduction unit **193**. The gear reduction unit **193** is fixed on a plate **194** suitably secured to the frame members **152**, **153**. An input shaft **195** of the gear reduction unit **193** has a pulley **196** fixed thereon which is engaged by an endless belt **197** driven by a pulley **200** (FIGURE 1) which is fixed on one reduced end of the conventional take-up roll **35**.

The conventional take-up roll is driven to rotate in either direction under control of the operator by conventional means, including a reversible electric motor **201** which is connected with the take-up roll **35** by means of the pulley **200**, the endless belt **202** and a pulley **203**, the latter pulley **203** being fixed on the shaft of the electric motor **201**. Referring to FIGURE 5, the electric motor **201** is controlled by a manually operable switch **205** which, at times establishes contact between a conductor **206** and a conductor **207** and, at other times, the switch **205** establishes contact between a conductor **210** and a conductor **211**. The conductors **207**, **210** are connected to the electric motor **210** and conductors **212**, **213** are also connected to the electric motor **201** and lead therefrom to the respective lead wires or conductors **122**, **123**. The ends of the conductors **206**, **211** remote from the switch **205** are connected to the respective conductors **213**, **212**.

Each time a slub or gout is found by the inspector, the inspector depresses a pedal **220** which closes a normally open switch **221** (FIGURES 1 and 5) which normally open switch is interposed in a conductor **222**. The conductor **222** extends from the lead conductor **123** to one side of the electrically operable counter **101** and the other side of the counter **101** has a conductor **223** leading therefrom to the lead wire or conductor **122**. It will be observed in FIGURES 1, 3 and 4 that the electrically operable counter **101** is suitably secured to one side of the housing **15** of the cloth-inspecting machine **10**.

It is thus seen that, during inspection of the cloth Y on the cloth-inspecting machine **10** in FIGURE 1, the defects observed by the inspector are tabulated by the

operator closing the appropriate switches A through L on the switch unit 100 in FIGURES 1, 10 and 11. Thus, holes such as those indicated at 2–*a* through 2–*l* may be formed in the tabulating strip 103 at the appropriate places along the respective lines *a* through *l* as shown in FIGURE 12.

When a given length or roll of cloth Y has been inspected on the cloth-inspecting machine 10 as heretofore described, a rubber stamp is positioned in engagement with the bar 147 and the locator 150 (FIGURES 4 and 7) to print the information shown in the right-hand portion of FIGURE 12 on the corresponding end portion of the tabulating strip 103, after which the tabulating strip is torn or otherwise severed and the reel 163 is then removed from the spindle 161 and positioned on a spindle or shaft 225 of the playback mechanism or transcribing device 105 (FIGURES 2, 9, 13, 14 and 15) associated with the cloth-folding machine 12.

It will be observed in FIGURE 14 that the reel 163 is frictionally retained on the shaft or spindle 225 so as to maintain tension in the tabulating strip 103 as it is drawn from the reel 163 over a drive roller 226. In this instance, the reel 163 is frictionally retained on the shaft or spindle 225 by means of a compression spring 227, one end of which bears against a side frame member 230, in which one end of the shaft or spindle 225 is suitably secured, and the other end of which bears against one of the flanges of the reel 163. The other flange of the reel 163 is thus urged against a plate or washer 231 fixed on the free end of the shaft 225, as by a screw 232. A frame member 234 is spaced from the frame member 230 and these two frame members are fixed, at their lower ends, to opposite sides of a platform 235 suitably secured to the frame of the cloth-folding machine 12 as shown in FIGURES 2, 13 and 14.

It will be observed in FIGURE 13 that the frame member 234 is cut away, as at 236, to permit the mounting of the reel 163 on the shaft or spindle 225 and to also permit removal of the reel 163 from the shaft or spindle 225. The upper portions of the frame members 230, 234 are suitably secured to opposite ends of a plate 237 on which a pair of spaced substantially U-shaped brackets 240, 240′, made from insulation material, are suitably mounted for purposes to be presently described. The roll 226 has a pair of circular rows of circularly spaced traction pins 242 suitably secured thereto and projecting outwardly therefrom, which are adapted to register with the traction holes 110, 111 adjacent opposite sides of the tabulating strip 103. As the tabulating strip 103 is drawn from the reel 163 positioned on the transcribing device 105, by the drive roller 226, the tabulating strip then merely falls, by gravity, toward the floor on which the cloth-folding machine 12 rests. Of course, it is contemplated that suitable means may be provided for taking up the tabulating strip 103 as it passes over the roll 226. The roll 226 is fixed on a shaft 245 journaled in the side frame members 230, 234 of the transcribing device 105 and one end of the shaft 245 has a sprocket wheel 246 fixed thereon which is engaged by a sprocket chain 247. The sprocket chain 247 also engages a sprocket wheel 250 fixed on an output shaft 251 of a suitable gear or speed reduction unit 252. The speed reducing or gear reduction unit 252 is also suitably secured to the upper surface of the platform 235.

An input shaft 253 of the gear reduction unit 252 has a sprocket wheel 255 fixed thereon which is engaged by a sprocket chain 256. It will be observed in FIGURE 2 that the sprocket chain 256 extends longitudinally of the cloth-folding machine 12 and is mounted on a sprocket wheel 257 shown somewhat schematically in FIGURE 2. The sprocket wheel 257 is fixed on the shaft 73 which, as heretofore stated, is driven by the electric motor 62, through interventing connections, to impart rotation to the crank 86 and to thereby reciprocate the folding blade 56. The gear reduction unit 252 is also arranged to cause the tabulating strip 103 to move at the same speed relative to the speed of the cloth-folding machine as the tabulating strip 103 is caused to move relative to the cloth Y when it is mounted on the tabulating device 102 as heretofore described.

In order to insure that the tabulating strip 103, while mounted on the transcribing device 105, is maintained tightly in engagement with the periphery of the drive roll or roller 226, it will be observed in FIGURES 13 and 14 that a pair of rollers 260, 260′ rest upon the portion of the tabulating strip 103 passing in engagement with the apex of the drive roll 226 immediately adjacent the traction pins 242. The weight rolls 260, 260′ are formed integral with, or suitably secured to, a shaft 261 which is loosely mounted in bifurcated portions 262, 263 projecting upwardly from the upper surfaces of the side frame members 230, 234 of the transcribing device 105. The central portion of the shaft 261 is preferably grooved from the reception of one end of an arm 265 which extends upwardly and inwardly toward the vertical plane of the frame of the cloth-folding machine 12 and is fixed on a torsion bar or rod 266. The torsion rod 266 is journaled in upwardly projecting portions 267, 268 on the inner portions of the respective side frame members 230, 234. The torsion rod 266 is urged in a clockwise direction in FIGURE 13 by means of a torsion spring 270, one end of which is fixed to a collar 271 fixed on the shaft 266, and the other end of which is connected to the upwardly projecting portion 267 of side frame member 230.

The brackets 240, 240′ are parts of detecting devices and, since both of these are identical, only the parts associated with bracket 240 will be described in detail and like parts associated with the bracket 240′ will bear the same reference characters with the prime notation added.

The bracket 240 has a shaft or bar 275 mounted therein to which one end of an electrical conductor 276 is suitably connected. A tubular member 277 is pivotally supported on the shaft 275 and has one end of a detector finger 280 fixed thereto, which detector finger extends downwardly and outwardly at an angle and is turned upwardly at its free end. The free end of the detector finger 280 is normally urged into engagement with the portion of the tabulating strip 103 which engages the apex of the driving roller 226, by means of a torsion spring 281, one end of which is connected to bracket 240, and the other end of which is connected to the detector finger 280.

It will be observed in FIGURE 14 that the detector fingers 280, 280′ are so positioned as to engage the tabulating strip 103 as it passes over the driven roller 226, immediately adjacent or in alignment with the lines *a*, *l* on the tabulating strip 103. The detector fingers 280, 280′ are made from an electrically conductive material and are connected with a suitable stop motion for the electric motor 62, as shown in FIGURE 9. Thus, each time a hole 2–*a* denoting a seam in the corresponding portion of the cloth Y, registers with the detector finger 280′, the detector finger 280′ engages the periphery of the roll 226 to ground the circuit to the electrically operable stop motion. Also, each time a hole 2–*l*, denoting the point at which a mandatory cut is to be made in the cloth, registers with the detector finger 280 (FIGURES 12, 14, and 15) it is apparent that the circuit to the electrically operable stop motion will also be completed. Of course, this mechanism may be used for actuating any type of electrically operable apparatus, the stop motion being preferred.

By way of example, a suitable stop motion is shown in FIGURE 9 wherein it will be observed that the electric motor 62 has wires or conductors 285, 286 connected to opposite sides thereof which lead to a plug 287 adapted to be connected to a suitable source of electrical energy, not shown. The conductors 285, 286 have respective switches 290 and *s* interposed therein, the switch 290 being a manually operable switch or master switch and

the switch *s* being a part of a manually reset relay broadly designated at R. The switch *s* is normally closed whenever the coil **291** of the relay R is de-energized. The relay R also includes a normally open switch *s'* which is adapted, when closed, to close a circuit between the coil **291** of the relay R and a grounded conductor **292**. The primary winding of a step-down transformer T is connected with the conductor **285** between the motor **62** and the switch **290** and is also connected with the conductor **286** between the switch *s* and the plug **287**. The secondary winding of the transformer T is grounded at one end thereof to the frame of the cloth-folding machine and the other end thereof is connected to one end of the coil **291** of the relay R. The other end of the coil **291** has the end of the conductor **276'** remote from the shaft **275'** (FIGURE 14) connected thereto and the end of the conductor **276** remote from the shaft **275** (FIGURES 9 and 14) is connected to a medial portion of conductor **276'**.

It is thus seen that upon either one of the detector fingers **280**, **280'**, or both, being grounded by engagement with the periphery of the roller **226**, the coil **291** of relay R is energized thus opening switch *s* and closing switch *s'* to thereby stop the electric motor **62**. The switch *s'* then serves to maintain energization of the relay R in the event that holes **2**–*a* and/or **2**–*l* in the tabulating strip **103** (FIGURE 12) may have moved beyond the corresponding detector fingers **280**, **280'**. After the operator of the cloth-folding machine has torn or otherwise severed the cloth at the folding station, the relay R may then be manually reset to close to switch *s* and open the switch *s'*.

It is thus seen that I have provided an improved apparatus and method for grading cloth in which a tabulating strip is moved in synchronism with the cloth during inspection thereof and defects in the cloth are recorded on the tabulating strip **103**, including places at which the cloth should be severed either because of a seam or because of a particularly defective portion of the cloth being determined and wherein the tabulating strip is then placed on a transcribing device which is associated with a cloth-folding machine and will automatically cause the machine to stop each time the cloth is to be severed.

In many instances, cloth is sold in rolled form instead of being folded and, heretofore, it has been necessary to fold the cloth in order to determine its quality and to then re-roll the cloth. The present cloth-inspecting system eliminates the intermediate step of folding when the cloth is sold in rolled form, since the portion of the tabulating strip **103** corresponding to each roll of cloth will remain with the roll of cloth when it is shipped from one place to another and the holes, irregularities or other indicia formed in or on the tabulating strip **103** are used for determining points at which the cloth should be severed during subsequent processing, such as at rolling and brushing machines, so that so-called "shorts" and "seconds" may be separated from the first grade cloth at any time during the processing of the cloth following the inspection of the cloth on a cloth-inspecting machine such as that indicated at **10** in FIGURE 1.

"Shorts" are distinguished from first grade lengths of cloth in that first grade cloth pieces are forty or more yards long and are usually approximately seventy-five yards long while "shorts" are less than forty yards long. Of course, the number of defects recorded on the lines *a* through *l* of a particular portion of the tabulating strip **103** are used to determine whether a corresponding length of cloth should be of first or second grade or quality, regardless of the length of the cloth.

In normal occurrence, rolls off the loom may be as much as 400 yards long. By inspecting and grading all 400 yards, before any cutting is done, four of five 75 yard pieces of first quality cloth may be obtained by properly spacing the cuts; whereas, cutting every 75 yards could put additional pieces into "seconds." In the present and previous practice of grading cloth, it is very difficult to ascertain, except only in a very general way, just where the cuts could best be made to get the best return on the cloth, since there is so much length involved that the eye and the mind do not readily or clearly comprehend the entire piece of cloth as a unit as well as each of the possible sub-divisions thereof, and at the same time, the location and types of defects involved, some of which sub-divisions or portions thereof might possibly be gradable "firsts," while other segments might be gradable as "seconds," by thorough comprehensive study, which study is hardly possible with the present practice of viewing the long length of cloth itself in either complete roll form or small segments thereof at the most. Consequently, it often occurs in present practice that an entire piece will be graded "second," whereas the defects may be highly concentrated in one area, and if this particular area is cut out a remaining large segment of cloth may actually be graded as a "first." With the method and apparatus of the instant invention, it is quite easy to scan the entire condensed, yet complete pattern of defects as they actually occur on the entire length of cloth merely by scanning the tabulating strip or tape with its corresponding indicia thereon. Obviously, any desired defects may be recorded in accordance with the instant method. In this manner, it will readily be apparent that a much more rapid and accurate grading can be facilely accomplished with the method of the instant invention and the illustrative or other suitable apparatus for practicing such method.

After the cloth has been inspected on the cloth-inspecting machine **10**, the information recorded on the corresponding portion of the tabulating strip **103** may also be used as a record of loom performance to thereby serve as a guide for correcting any mechanical defects in the loom as well as correcting any defects in various other machines involved in the processing of the cloth up to the time of inspection, including the spinning frames, roving frames, slashers, etc. Thus, the improved system greatly facilitates quality control from the initial processing of textile fibers throughout the various manufacturing processes involved in the manufacture of cloth, up to the time that the cloth is inspected, as well as eliminating the labor heretofore required specifically for classifying or grading the cloth and providing permanent records on the various styles of cloth and on individual looms.

While I have shown for illustrative purposes one physical embodiment for carrying out the method of my invention, it will readily be apparent to those skilled in the art that the invention is capable of many modifications without departing from the scope thereof, and that the invention is not to be taken as limited by this illustrative example, but only by the scope of the appended claims. For instance, obviously, other types of tabulating device, such as vacuum punches, etc., and other types of play-back and read-out devices might be used in lieu of the illustrated devices for these purposes. Also, the method is obviously usable in conjunction with other types of cloth moving machines, the illustrated cloth moving machines being disclosed only for the purpose of illustrating the method of this invention and the use of illustrative apparatus which may be used in effecting the method.

That which is claimed is:

1. The method of predeterminedly actuating an electrical circuit of an apparatus on which cloth is processed which comprises moving a section of cloth, of greater length than, in synchronism with, and at a faster speed than, a tabulating strip during inspection thereof, recording the presence of a plurality of different defects in the cloth with corresponding detectably distinct indicia and in linearly proportionate reduced scale position on said tabulating strip whereby the quality of the cloth may be evaluated from a review of the tabulating strip, forming additional indicia on the tabulating strip at

points at which the cloth should be severed, and then using said additional indicia formed on the tabulating strip for actuating said electrical circuit while moving the tabulating strip in synchronism with the cloth on said apparatus.

2. The method of detecting the presence of certain defects in a length of cloth while moving the cloth lengthwise which comprises inspecting the cloth while moving a recording medium of shorter effective length than, in synchronism with, and at a slower speed than, the cloth, forming indicia on the recording medium corresponding to defects occurring in the cloth whereby the quality of the cloth may be evaluated from a review of the recording medium, then moving the same cloth longitudinally while again moving the corresponding recording medium in synchronism with, and at a slower speed than, the cloth, and automatically detecting the presence of certain of said indicia previously formed on the recording medium to determine the presence of defects denoted by the latter indicia in the corresponding portions of the cloth.

3. The method of detecting defects in cloth which includes moving a tabulating strip of shorter length than, in synchronism with, and at a correspondingly slower speed than movement of the cloth during inspection thereof, forming apertures in the tabulating strip along selected ones of several longitudinally extending laterally adjacent zones corresponding to each of several different defects observed in the cloth during inspection thereof whereby the quality of the cloth may be evalutated from a review of the tabulating strip, then moving the tabulating strip in synchronism with the cloth, and at the same speed ratio as during said first mentioned synchronous movement of said tabulating strip and cloth while automatically detecting the presence of certain of said apertures in the tabulating strip to indicate the detection of said certain defects whereby the position of the defective portions of the cloth may be ascertained with respect to the tabulating strip.

4. The method of detecting defects in cloth comprising moving a tabulating strip, of shorter length than, in synchronism with, and at a slower speed than, movement of the cloth during inspection thereof, forming indicia on the tabulating strip along selected ones of several longitudinally extending laterally adjacent zones corresponding to defects in the cloth whereby the quality of the cloth may be evaluated from a review of the tabulating strip, then moving the tabulating strip in synchronism with the cloth and at a speed ratio corresponding to the previous speed ratio thereof while automatically detecting the presence of selected ones only of said indicia on the tabulating strip, and effecting a desired operation on the cloth as a function of the detected selected indicia.

5. A method of controlling the movement of a length of cloth which comprises inspecting a length of cloth while moving a tabulating strip, of shorter length than, in synchronism with, and at a relatively slower speed than the length of cloth, forming indicia on the tabulating strip corresponding to certain defects in the cloth whereby the quality of the cloth may be evaluated from a review of the tabulating strip, and then moving the tabulating strip past a detector in synchronism with and at a relatively slower speed than, movement of the cloth whereby the detector automatically detects the presence of certain indicia aligned therewith during the course of movement of the tabulating strip and stopping the moving advance of said cloth upon detection of one of said defects.

6. That method of processing cloth material which comprises passing said material in synchronization with but at a greater speed than recording media and past an inspection station, marking the recording media to indicate the locations and types of each of a plurality of different types of defects in the cloth material whereby the quality of the cloth may be evaluated from a review of the recording media, then passing said cloth material through cloth handling apparatus while moving the recording media past actuating means at a slower speed than the cloth material, automatically stopping the cloth handling apparatus and the moving of the recording media in accordance with certain indicia marked on the recording media, and performing a defect removal operation upon said cloth adjacent the lengthwise portions of said cloth material corresponding to the lengthwise location of said certain indicia on said recording media.

References Cited by the Examiner

UNITED STATES PATENTS

662,153	11/1900	Sauermilch	33—132
1,172,058	2/1916	Scheyer	83—71
1,241,248	9/1917	Payne	83—71
1,320,643	11/1919	Newcomer	83—71
1,560,167	11/1925	Jones	242—57
2,206,518	7/1940	Strzalkowski	66—82
2,377,573	6/1945	Potts	242—57
2,537,499	1/1951	Williamson	200—46 X
2,703,933	3/1955	Blake	33—132
2,704,453	3/1955	Davis	73—159
2,880,838	4/1959	Panissidi	226—9
2,930,228	3/1960	Lawrence et al.	73—159
3,023,900	3/1962	Thier	346—33
3,094,261	6/1963	Thompson	226—9
3,094,368	6/1963	Peck	73—159 X

FOREIGN PATENTS

606,660	12/1934	Germany.
728,127	4/1955	Great Britain.

ROBERT R. MACKEY, *Primary Examiner.*

MERVIN STEIN, DONALD W. PARKER, *Examiners.*