May 16, 1967 H. E. PANNULLO ETAL 3,319,390

ARCHITECTURAL SIDING

Filed Aug. 19, 1964 2 Sheets-Sheet 1

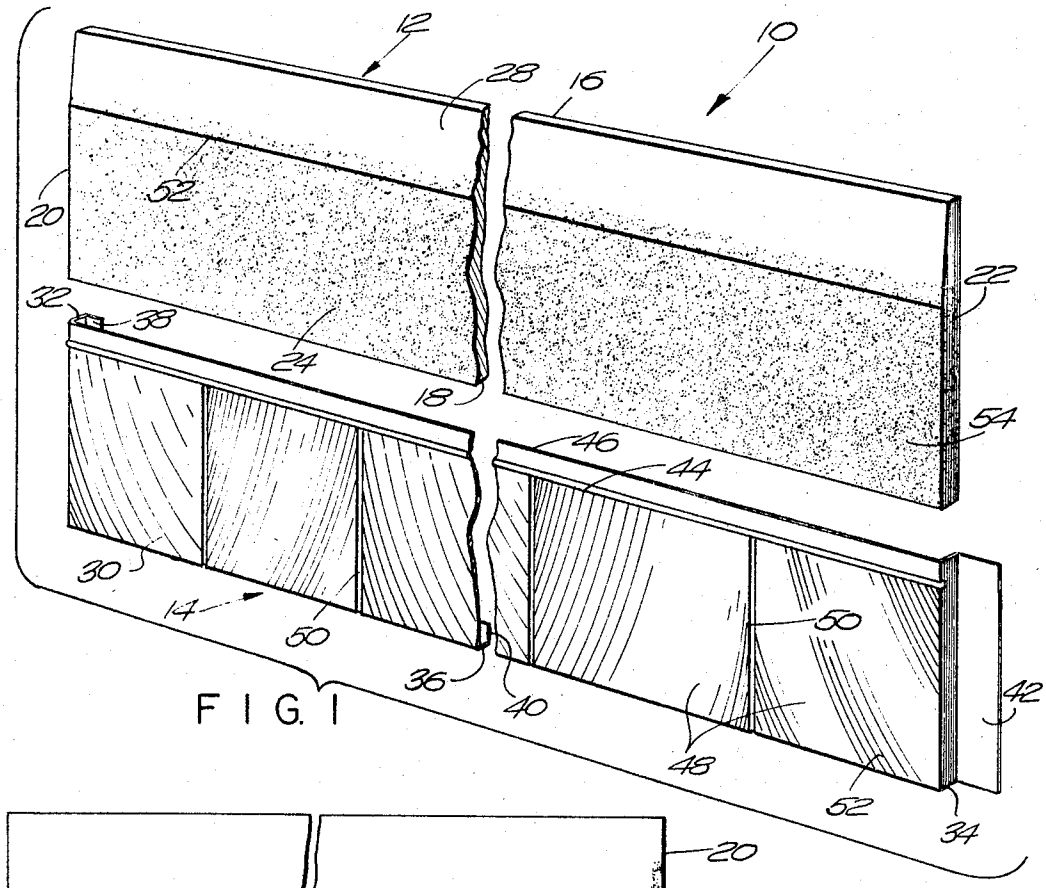

FIG. 1

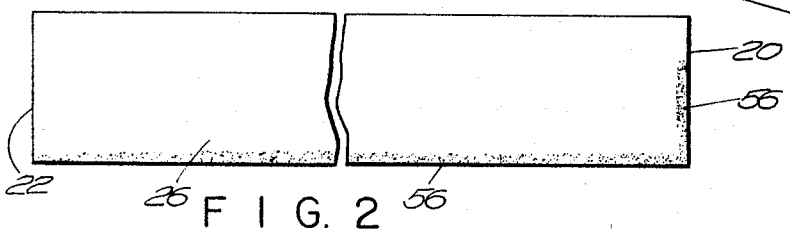

FIG. 2

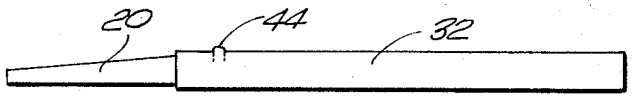

FIG. 3

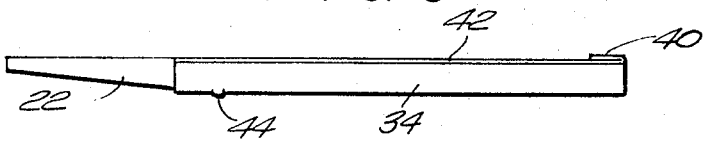

FIG. 4

INVENTORS
HUGO E. PANNULLO
HUGH C. NEVILLE
BY HUGH NEVILLE, JR.
Salter & Michaelson
ATTORNEYS

May 16, 1967 H. E. PANNULLO ETAL 3,319,390

ARCHITECTURAL SIDING

Filed Aug. 19, 1964 2 Sheets-Sheet 2

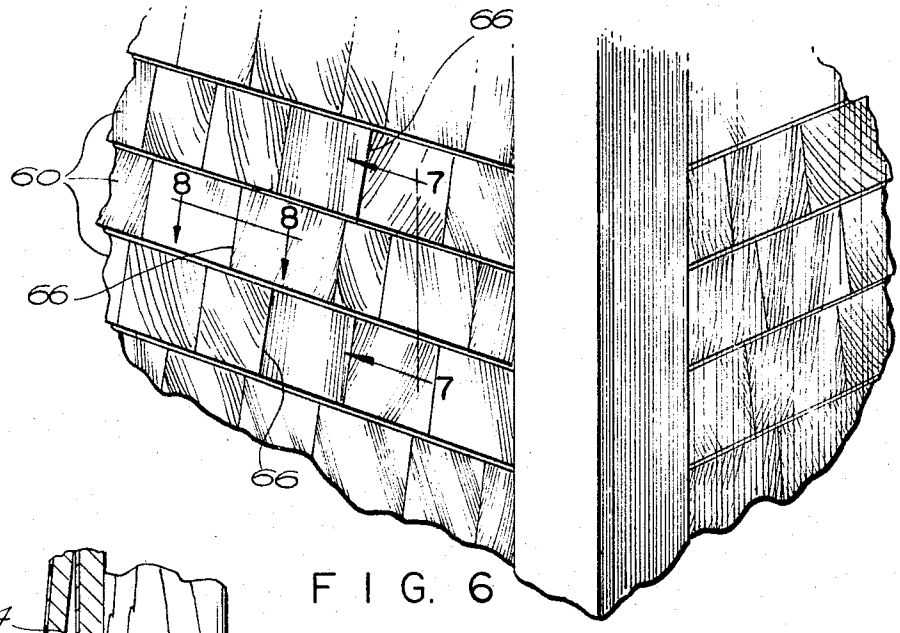

FIG. 6

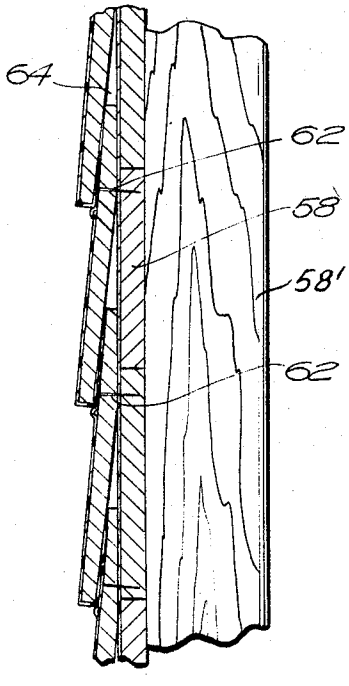

FIG. 7

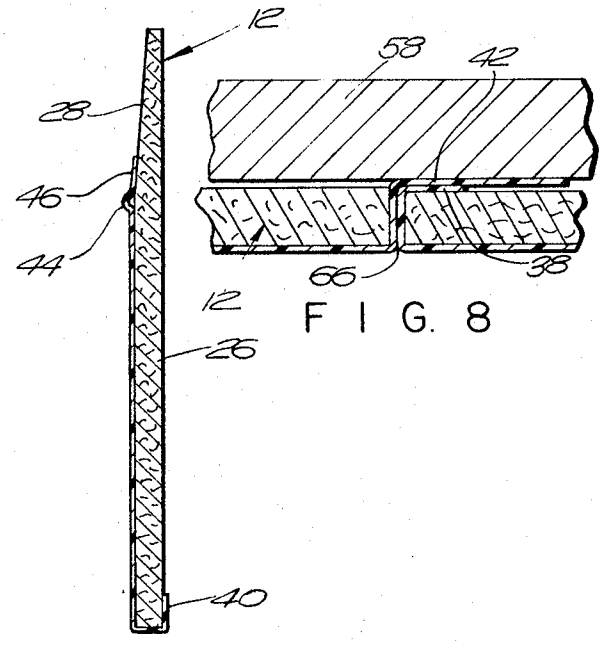

FIG. 8

FIG. 5

INVENTORS
HUGO E. PANNULLO
HUGH C. NEVILLE
BY HUGH NEVILLE, JR.
Salter & Michaelson
ATTORNEYS

United States Patent Office 3,319,390 Patented May 16, 1967

3,319,390

ARCHITECTURAL SIDING

Hugo E. Pannullo, Johnston, Hugh C. Neville, Barrington, and Hugh Neville, Jr., Tiverton, R.I., assignors, by direct and mesne assignments, to Supradur Plastics Corporation, Fall River, Mass., a corporation of Delaware

Filed Aug. 19, 1964, Ser. No. 390,531
8 Claims. (Cl. 52—309)

The present invention relates generally to siding products and is more particularly concerned with a novel and improved architectural siding for use on houses and other buildings.

A primary object of the instant invention is the provision of an architectural siding that closely simulates the appearance of wood shingles.

Another object of our invention is the provision of an architectural siding that may be supplied in a variety of different colors but which nevertheless does not require paint and which is relatively easy to clean and maintain.

A further object is the provision of an architectural siding of the character described that is impervious to insects and corrosion.

Another object is the provision of an architectural siding that is electrically non-conductive and flame resistant, as well as being self-extinguishing whenever combustion occurs.

A further object is the provision of an architectural siding that provides excellent insulation against heat and cold and which, due to its construction, does not require separate weather stripping or seal tabs at the vertical butt joints.

A further object is the provision of an architectural siding of the character described that has high impact strength and that is not affected by mold or mildew.

Still another object is the provision of an architectural siding that is easy to install and that has built-in means which render it relatively difficult for vandals to rip off, once installed.

Another object is the provision of an architectural siding comprising a vinyl sheeting, there being built-in means for enabling contraction and expansion of the vinyl due to varying temperature conditions.

Another object is the provision of an architectural siding of the character described that is economically feasible to install and long lasting in use.

Other objects, features and advantages of the invention will become apparent as the description thereof proceeds when considered in connection with the accompanying illustrative drawings.

In th drawings which illustrate the best mode presently contemplated for carrying out the instant invention:

FIG. 1 is an exploded view of a siding strip constructed in accordance with our invention;

FIG. 2 is a rear view, on a reduced scale, of the backer board which forms a part of our siding strip;

FIG. 3 is a left-end view, on an enlarged scale, of the siding strip shown in FIG. 1;

FIG. 4 is a right-end view, on an enlarged scale, of the siding strip shown in FIG. 1;

FIG. 5 is an elevational section, on an enlarged scale, of the siding strip shown in FIG. 1;

FIG. 6 is a fragmentary perspective view showing our architectural siding installed on a building;

FIG. 7 is an enlarged section taken on line 7—7 of FIG. 6; and

FIG. 8 is an enlarged section taken on line 8—8 of FIG. 6.

Referring now to the drawings, and more particularly to FIG. 1 thereof, there is shown a siding strip, illustrated generally at **10**, which strip comprises a backer board shown generally at **12** and a vinyl sheet shown generally at **14** which covers said board in a manner hereinafter to be described.

The backer board **12** is of rectangular configuration, and preferably elongated, and comprises top and bottom edges **16**, **18**, side edges **20**, **22**, and front and rear surfaces **24** and **26**. For reasons that will hereinafter become apparent, the upper portion of front surface **24** is scived or beveled so as to gradually incline rearwardly as top edge **16** is approached, as shown at **28** in FIGS. 1 and 5. The backer board **12** may be of any suitable material, although it should be of semi-rigid construction, and we prefer to use fiberboard.

The vinyl sheeting **14** is preferably vacuum formed to assume the configuration illustrated most clearly in FIG. 1. Thus, the sheet **14**, which is relatively thin (approximately in the neighborhood of 1/64-inch), comprises a face area **30** folded rearwardly at its opposite ends as at **32**, **34**, and also folded rearwardly at its lower edge as at **36**. As will be seen most clearly in FIG. 1, rearwardly folded portions **32** and **36** have inwardly extending flanges **38** and **40**, while rearwardly folded portion **34** carries at its extremity an outwardly extending flap **42**. Integrally formed in sheet **14** and extending from side to side thereof is an outwardly protruding channel **44**. It will be seen that the channel **44** is located adjacent the top edge **46** of sheet **14**, and it will further be seen that the channel **44** defines the upper extremity of a plurality of integrally formed sections **48** that closely simulate wood shingles. Thus, the face area **30** is molded or vacuum formed so as to integrally comprise the sections **48**, each of which is separated from the other by slight vertical offsets **50**, and each of which is integrally formed with a textured surface **52** whereby the sheeting **14**, when assembled to the backer board **12** in a manner now to be described, bears an amazing resemblance to actual wood shingles. It should be understood, however, that although our invention is illustrated as simulating wood shingles, our concept is obviously not limited to this particular representation, since the sheet **14** could be molded or otherwise formed so as simulate wood or asbestos shakes, clapboard, or even brick. It will also be understood that the vinyl sheet **14** may be of any desired color, the plastic actually being impregnated prior to being formed so that the color will extend completely through the plastic sheet, thus eliminating any possibility or danger of color either wearing off or being scraped off, as is likely to happen where the color is merely painted on the siding.

After the vinyl sheet has been vacuum formed or otherwise molded, it is trimmed by a suitable trimming machine which operates on a heated die principle in order to precisely dimension the sheet **14** so that it may be applied to the backer board **12** in a manner now to be described. More specifically, the length of the face area **30** must equal the length of the backer board **12**, while the rearwardly extending portions **32**, **34** and **36** must be approximately equal to the thickness of the board. Also, the height of the sheet **14** should be approximately equal to the distance between the bottom edge of the backer board and the line **52** that defines the point where the scived or beveled portion **28** commences. In order to secure the sheet **14** to the board **12**, the latter is first coated with a suitable adhesive **54** on its front surface **24** approximately up to the line **52** and, also, on its side and bottom edges, as well as on the rear surface **26** at the marginal areas **56** illustrated in FIG. 2. Care should be taken to use an adhesive that will enable the vinyl sheet to be heat sealed to the backer board where desired, and which at the same time will enable a more flexible pressure seal to be achieved at the desired locations. Actually, it is possible to use a separate heat-sealable adhesive where a heat seal

is desired and a separate pressure-sensitive adhesive where a more flexible pressure bond is desired, but there are universal adhesives capable of effecting both heat and pressure seals. After the backer board has been coated with adhesive at the areas above described, the vinyl sheeting **14** is applied thereto, and a heat seal is effected between the sheet **14** and the board **12** along the strip defined by channel **44** and top edge **46**, along bottom edge **18** and side edge **20** of the board, and at the marginal portion of rear surface **26** where the flanges **38** and **40** engage the adhesive **54**. The portion of face area **30** of sheet **14** located below the channel **44** is pressure sealed to the front surface **24** of board **12**, while a portion **34** of sheet **14** is likewise pressure sealed to edge **22**. It will be understood that a heat seal is effected between sheet **14** and board **12** at those areas where fusion between the elements is actually desired. In those areas where a yielding bond is desired, it is important that a pressure seal be utilized.

Once the sheet **14** has been secured to backer board **12** in the manner above described, the completed siding strip **10** is ready for installation. Referring now to FIGS. 6 through 8, it will be seen that the strips **10** are secured in side-by-side relation to any suitable supporting surface, such as two by four's illustrated at **58'** in FIGS. 7 and 8. Thus, each course is made up of a plurality of side-by-side srtips **10** which are secured to the board **58** by any suitable means, as by nails **62**. As will be seen most clearly in FIGS. 6 and 7, each strip **10** overlaps the next lower strip, and specifically, the lower edge of each strip snugly engages the outwardly protruding channel **44** of the next lower strip. It will therefore be seen that the channels **44** provide an aligning feature when the strips are being installed, and at the same time this channel eliminates capillary action on the surface of the strips and also makes it more difficult for the strips to be pried open, such as by vandals, since the inner lower corner of each strip is not exposed. An additional advantage of the channel **44** is the fact that it functions as an expansion and contraction joint for the sheet **14** where varying temperature conditions are encountered. The molded textured design **52** in sheet **14** also is helpful to enable contraction and expansion of the vinyl due to varying temperature conditions. The scived or beveled portion **28** at the upper portion of the front or back surface **24** of each strip (FIGS. 5 and 7) enables the courses to more snugly overlap each other with a minimum of wasted space. It will be seen that the overlapping relationship of adjacent courses provides double insulation at most areas, and it will further be seen that at that portion of each strip where no double insulation exists, there is an air space **64** behind the strip which functions to improve the insulation characteristics. When these insulation features are considered in conjunction with the inherent good insulation characteristics of vinyl, it will be seen that our siding is extremely effective from an insulation standpoint. The vinyl also possesses high impact strength and is highly resistant to mold and mildew and other moisture. In addition, the vinyl is erosion-resistant and also is self-extinguishing where combustion occurs. Other inherent characteristics of the vinyl are that it is electrically non-conductive, it is substantially impervious to attacks by insects, and is easy to clean and maintain, there being no painting required, as previously explained.

As will be seen most clearly in FIG. 8, the side-by-side strips **10** are secured to the board **58** so that the flag **42** of one strip is secured behind the next adjacent strip. This provides a built-in flashing arrangement that eliminates the necessity of using weather stripping or seal tabs at the vertical butt joints **66**. It has also been found desirable to stagger the vertical butt joints **66** of each course as illustrated in FIG. 6.

While there is shown and described herein certain specific structure embodying the invention, it will be manifest to those skilled in the art that various modifications and rearrangements of the parts may be made without departing from the spirit and scope of the underlying inventive concept and that the same is not limited to the particular forms herein shown and described except insofar as indicated by the scope of the appended claims.

What is claimed is:

1. Architectural siding strip comprising a backer board and plastic sheet secured to said board and covering the front face thereof, both said backer board and said plastic sheet having top, bottom, and side edges, said sheet being heat-sealed at least to one side edge and said bottom edge of the board and extending around said edges into contact with said rear surface, said sheet having further a flap extending outwardly from said other side edge and positioned substantially in the plane of said rear surface, the sheet portion in contact with the front face of the board being sealed thereto essentially by pressure.

2. Architectural siding as defined in claim **1** further characterized in that said sheet is provided with an outwardly protruding channel extending from one side edge to the other.

3. Architectural siding as defined in claim **2** further characterized in that said channel is located adjacent to but spaced from said top edge, said sheet terminating adjacent to said channel, thus leaving the portion of said front surface adjacent said top edge uncovered.

4. Architectural siding as defined in claim **3** further characterized in that said uncovered portion of said front surface is beveled gradually rearward toward said top edge.

5. Architectural siding as defined in claim **4** further characterized in that said sheet is integrally formed to simulate a plurality of separate shingles.

6. Architectural siding comprising a plurality of strips as claimed in claim **3**, and means securing said strips to a supporting surface with the bottom edge of one strip overlapping the top edge of the next lower strip, and with said bottom edge in snug engagement with the channel of said next lower strip.

7. Architectural siding as defined in claim **6** further characterized in that the portion of said one surface above said channel is beveled gradually rearward toward the top edge of the strip.

8. Architectural siding comprising a plurality of similar strips, each strip comprising a backer board, a vinyl sheet pressure-sealed to one surface of said board and having an integral, outwardly protruding channel extending thereacross, said sheet extending rearwardly along the side and bottom edges of said board and being heat-sealed thereto, a flap extending outwardly from said sheet at one of said side edges, said flap being substantially in the plane of the rear surface of said board, and means securing said strips to a supporting surface so that side-by-side strips are in abutting relation with the other side edge of each strip overlying the flap of the next adjacent strip and with the bottom edge of one strip overlapping the top edge of the next lower strip, and with said bottom edge in snug engagement with the channel of the next lower strip.

References Cited by the Examiner

UNITED STATES PATENTS

1,638,746	8/1927	Robinson	52—556
1,666,755	4/1928	Rahr et al.	52—556
2,253,105	8/1941	Bill	52—556
2,264,546	12/1941	Ochs	52—541 X
3,043,730	7/1962	Adie	52—309 X
3,137,972	6/1964	Ekholm et al.	52—556 X

FOREIGN PATENTS

847,060	9/1960	Great Britain.

FRANK L. ABBOTT, *Primary Examiner.*

A. C. PERHAM, *Assistant Examiner.*